770N

Quick Guide

www.faac.it

□

www.faacgroup.com

IT

Quick Guide - istruzioni d'installazione.

istruzioni complete e dichiarazione CE di conformità devono essere scaricate dal sito web.

EN

Quick Guide - installation instructions.

complete instructions and CE Declaration of Conformity must be downloaded from the web site.

FR

Quick Guide - instructions d'installation.

les instructions complètes et déclaration CE de conformité doivent être téléchargées du site web.

RU

Quick Guide - инструкция установки.

полную инструкцию и сертификаты соответствия нормам CE вы найдете на веб-сайте.

PL

Quick Guide - Instrukcje montażu .

kompletne instrukcje oraz deklarację zgodności CE należy ściągnąć ze strony internetowej.

AR

Quick Guide - تعليمات للتنصيب.

الإرشادات الكاملة وتصريح المطابقة
للسوق الأوربية يجب تنزيلها من موقع الإنترنيت

DE

Quick Guide - Montageanleitung.

Die vollständigen Anweisungen und die CE-Konformitätserklärung müssen von der Website heruntergeladen werden

ES

Quick Guide -instrucciones de instalación.

las instrucciones completas y la declaración CE de conformidad deben descargarse del sitio web.

NL

Quick Guide - Installatiehandleiding.

de volledige instructies en de EG-verklaring van overeenstemming moeten van de website worden gedownload.

ZH

Quick Guide - 安装说明。

完整的说明和EC合格声明必须从网站上下载。

TR

Quick Guide - Kurulum yönergeleri.

Komple bilgiler ve CE Uygunluk Beyan namesinin web sitesinden indiril meleri gerekir.

PT

Quick Guide - instruções da instalação.

instruções completas e declaração CE de conformidade devem ser baixados do site web.

FAAC

FAAC

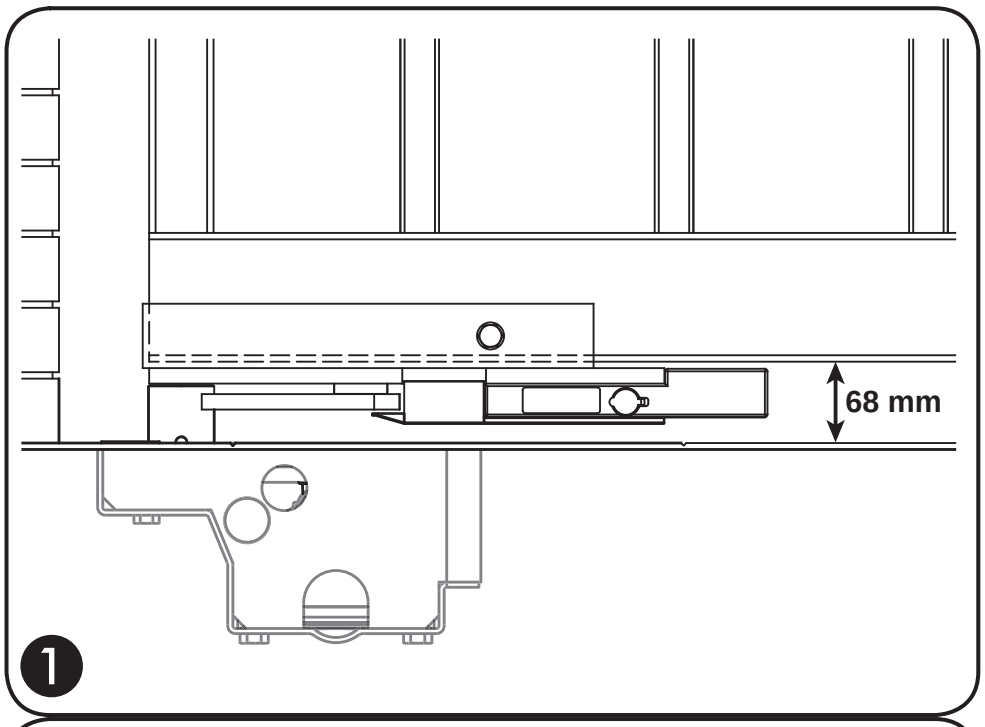
68 mm
1

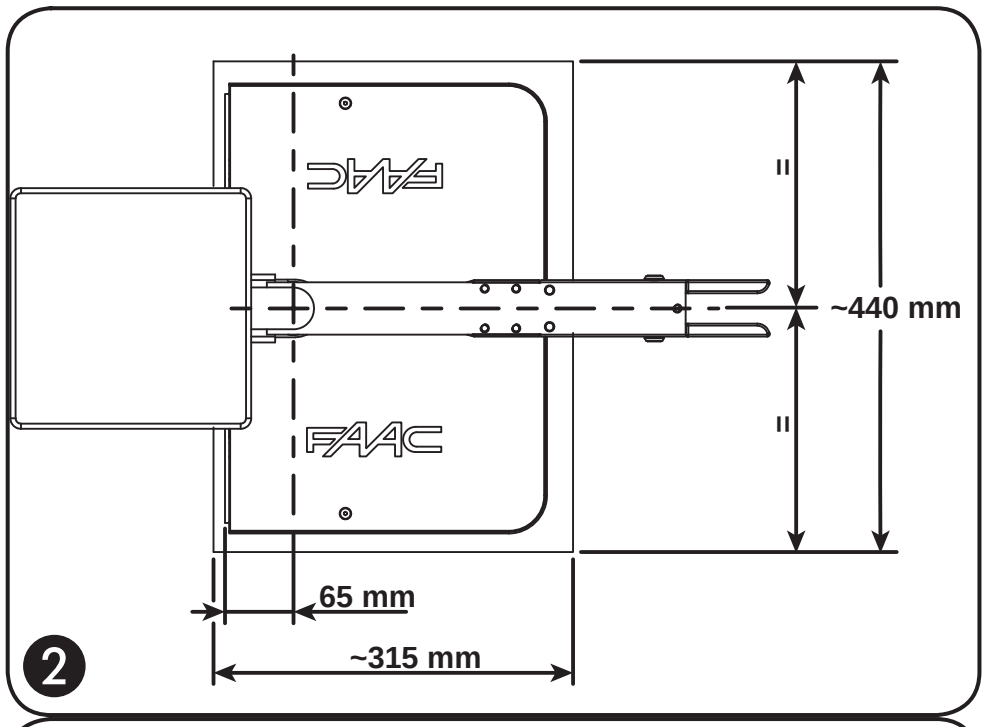
~440 mm
65 mm
~315 mm
2

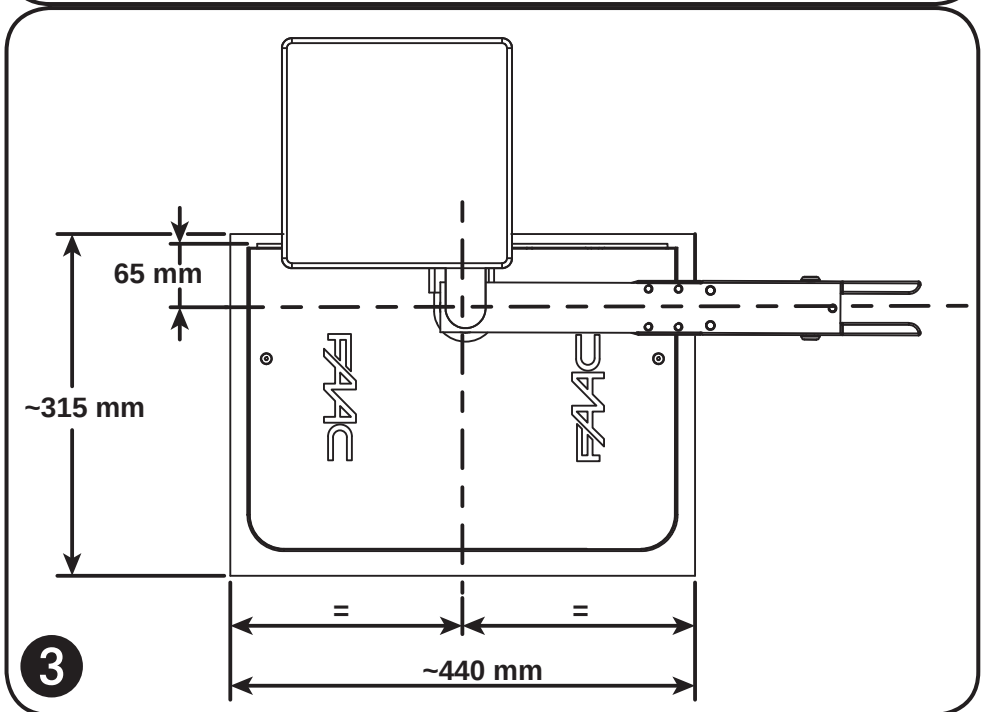
65 mm
~315 mm
=
=
~440 mm
3

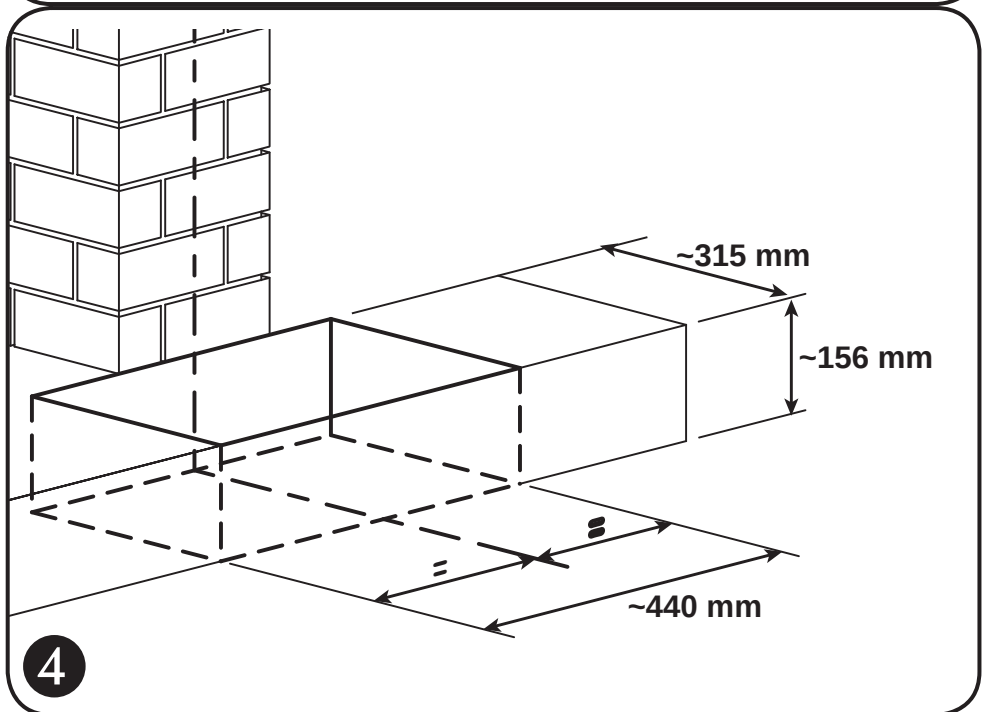
~315 mm
~156 mm
~440 mm
4

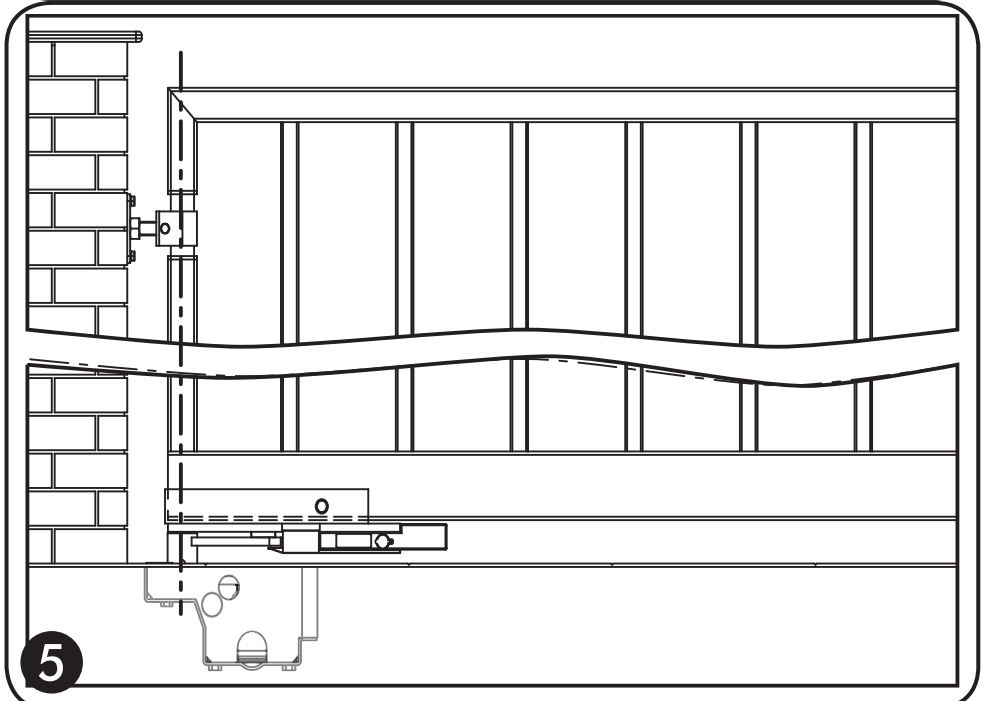
5

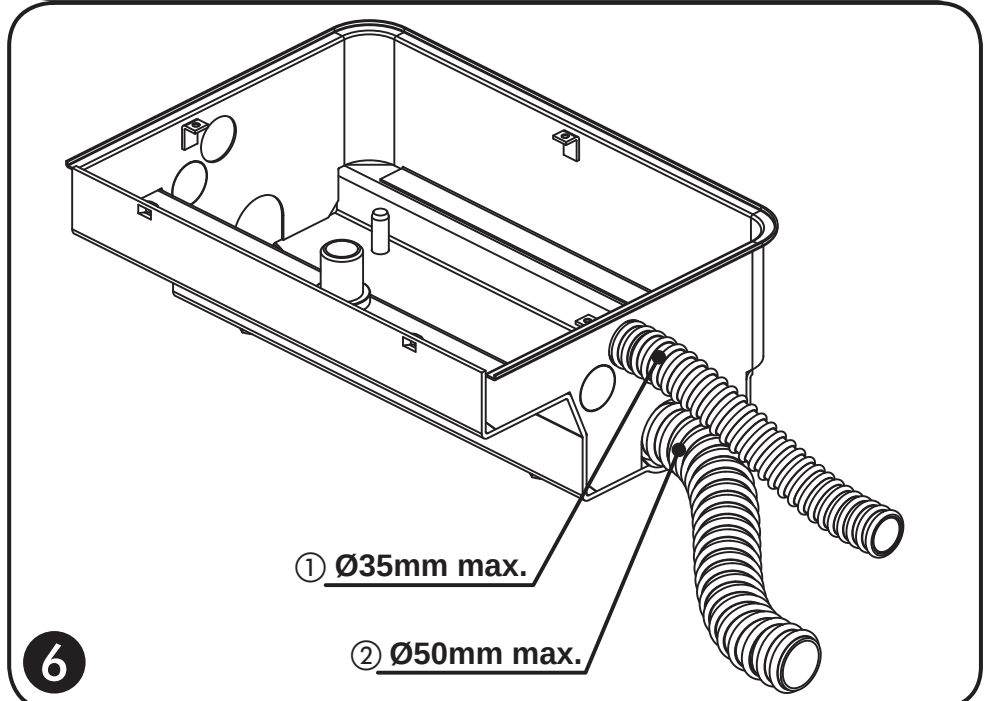
① Ø35mm max.
② Ø50mm max.
6

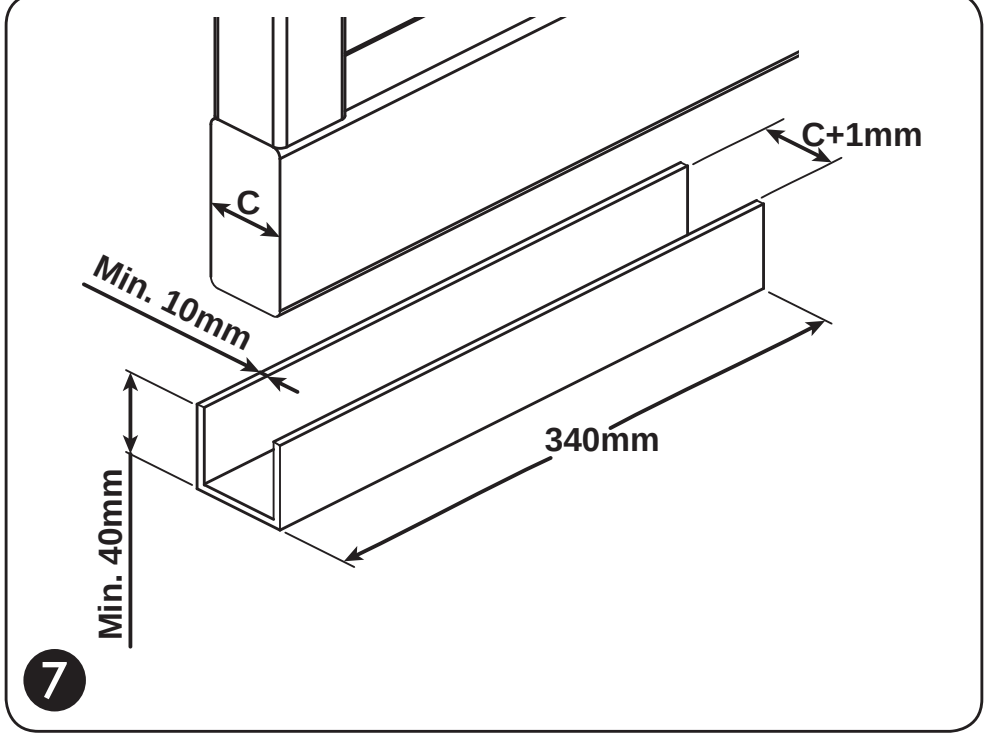
C+1mm
C
Min. 10mm
340mm
Min. 40mm
7

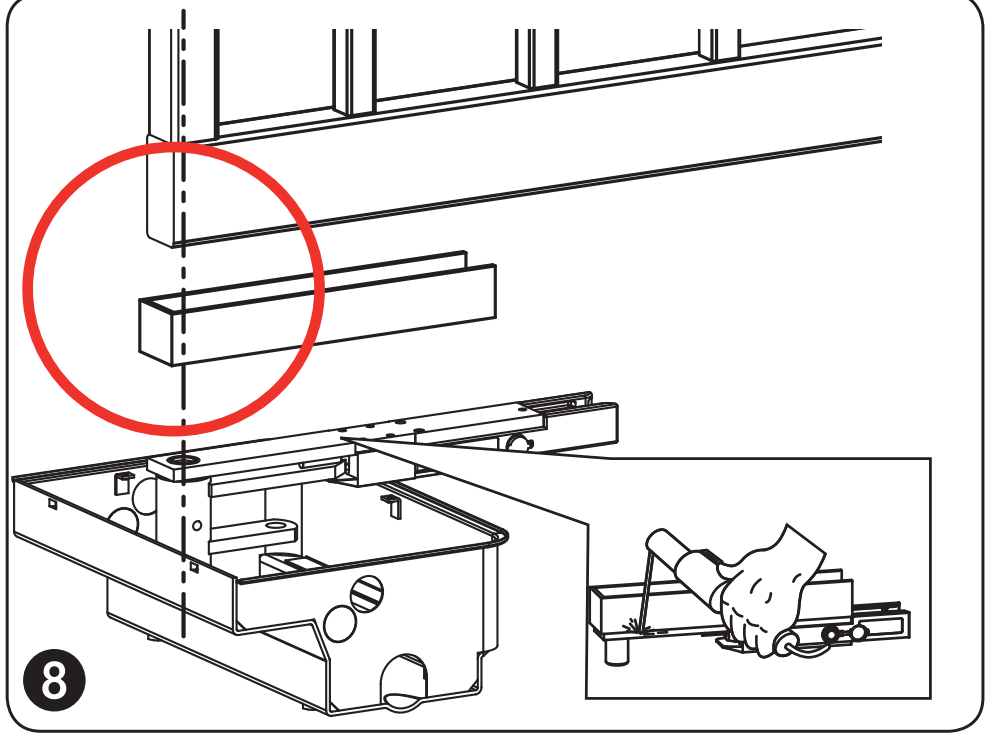
8

FAAC

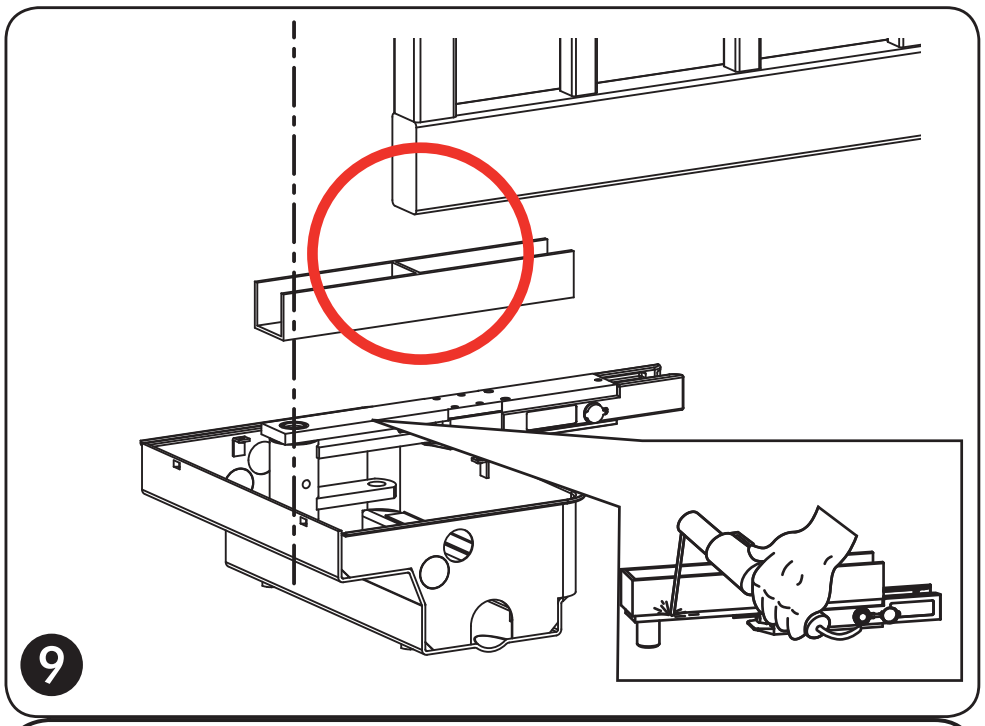

9

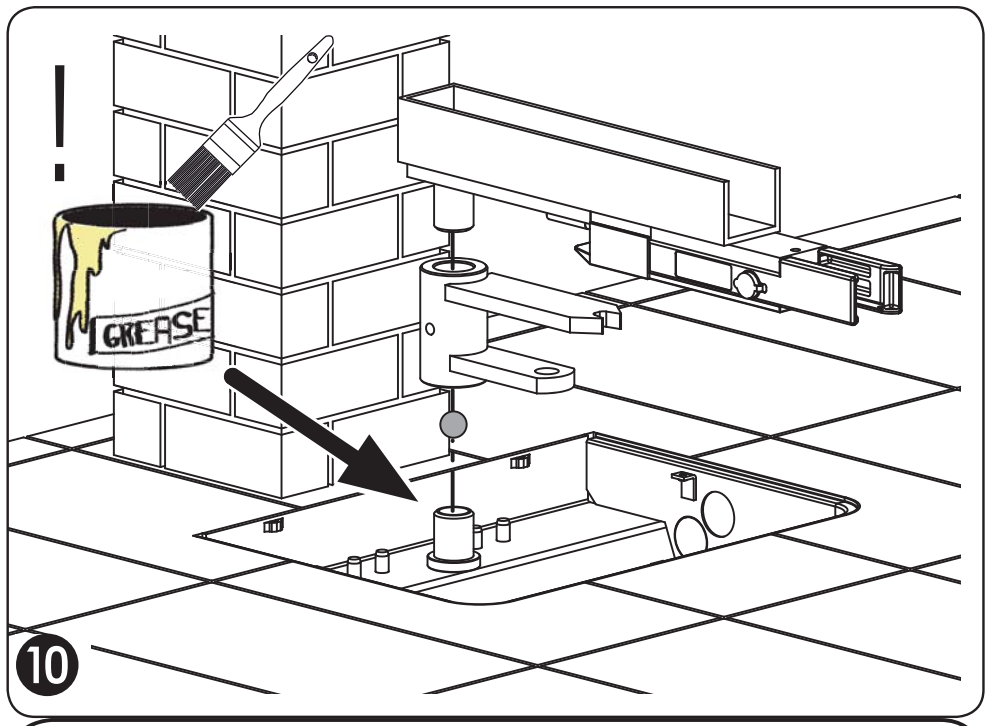

10

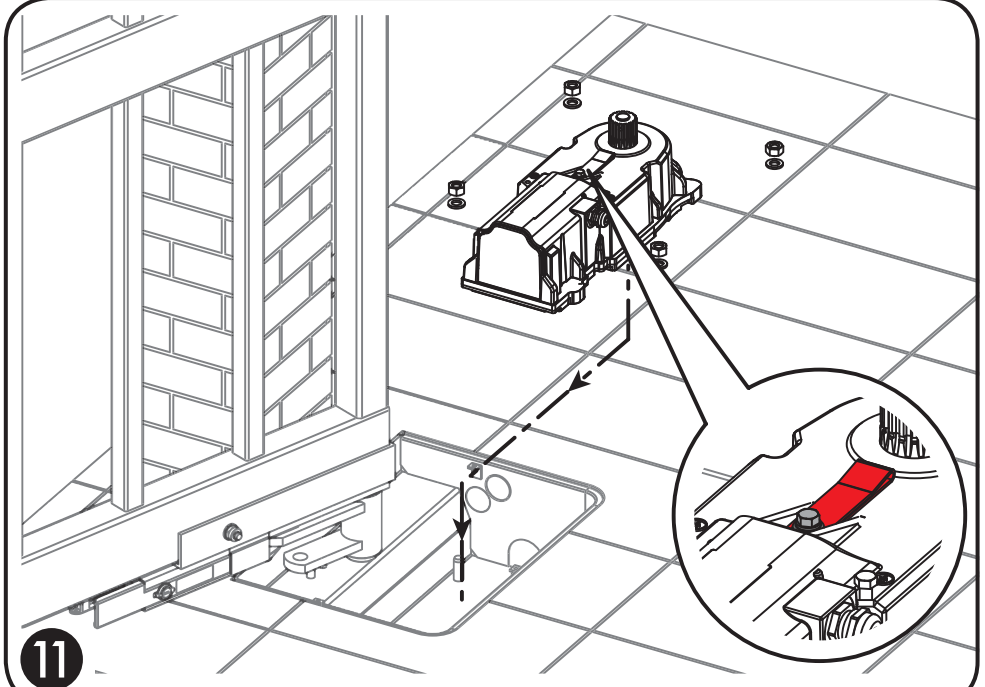

11

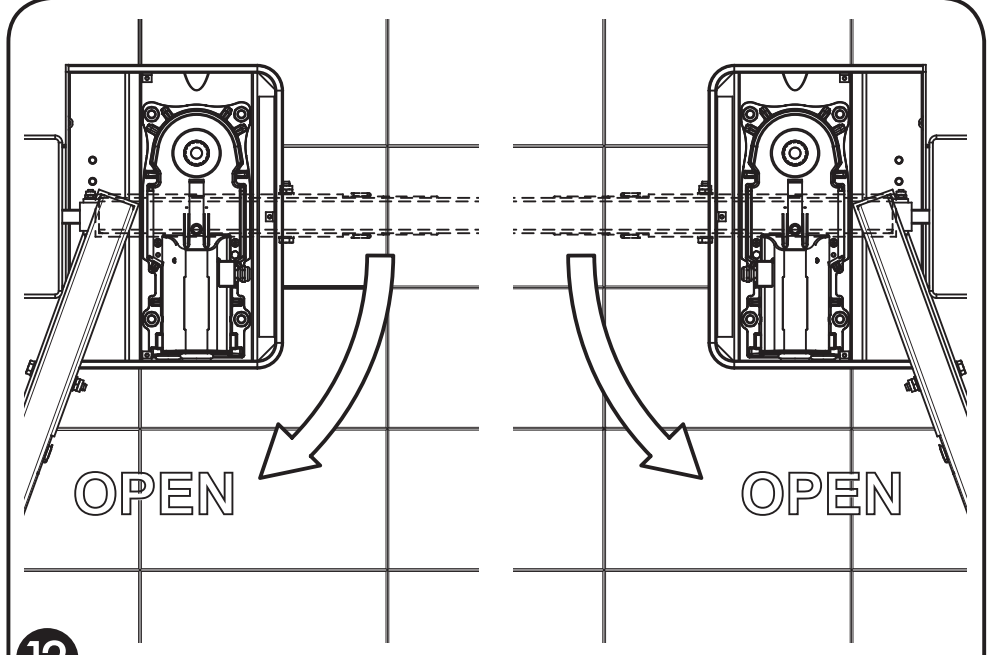

12

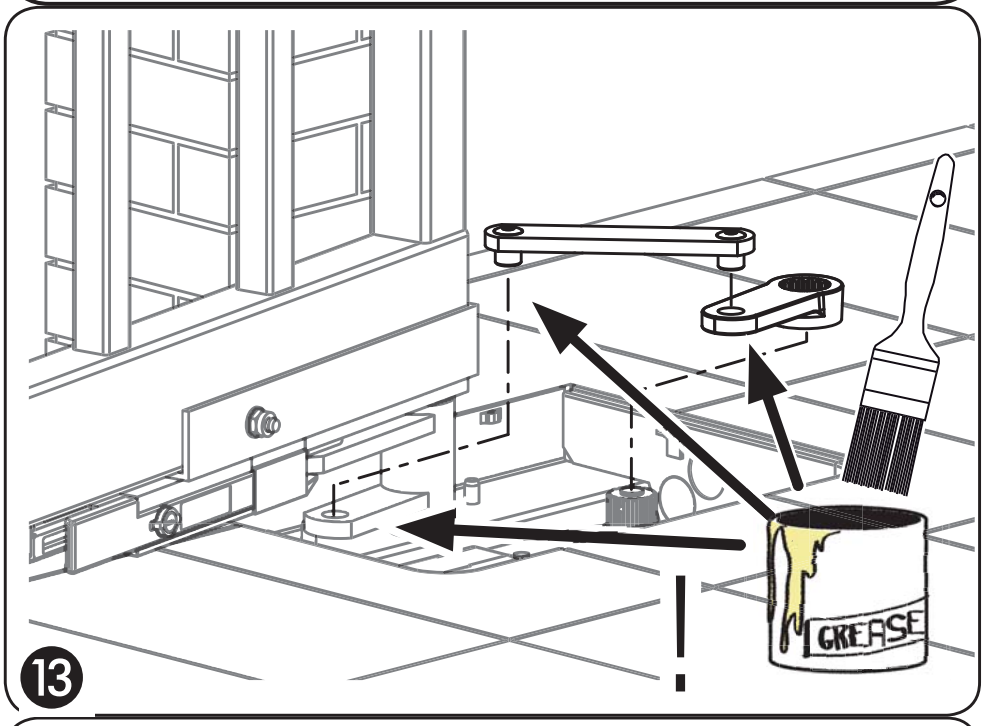

13

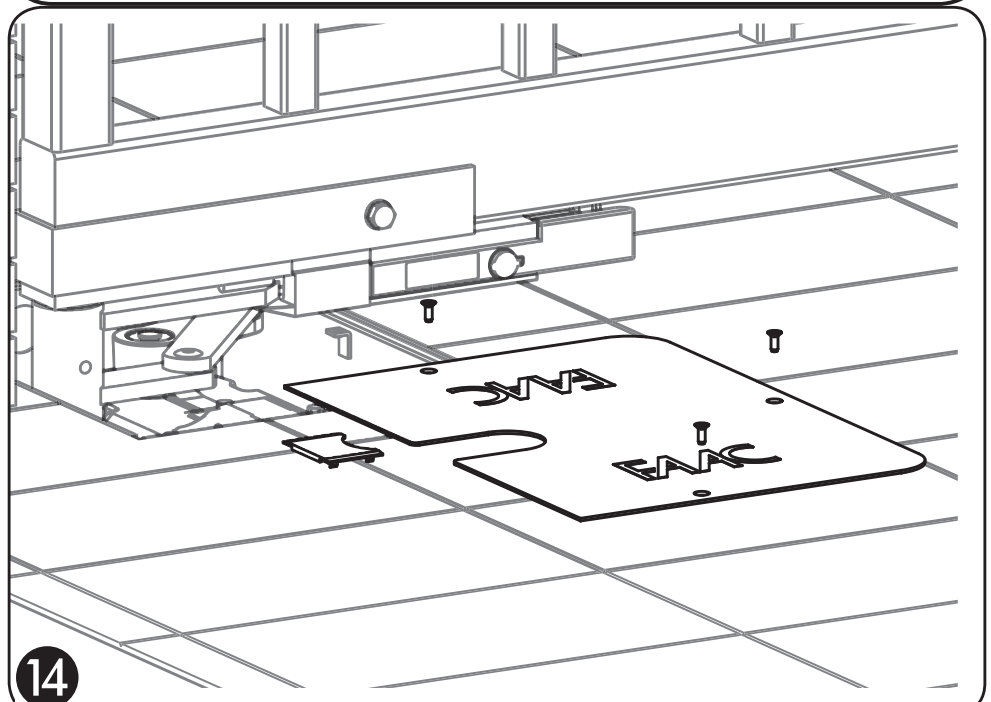

14

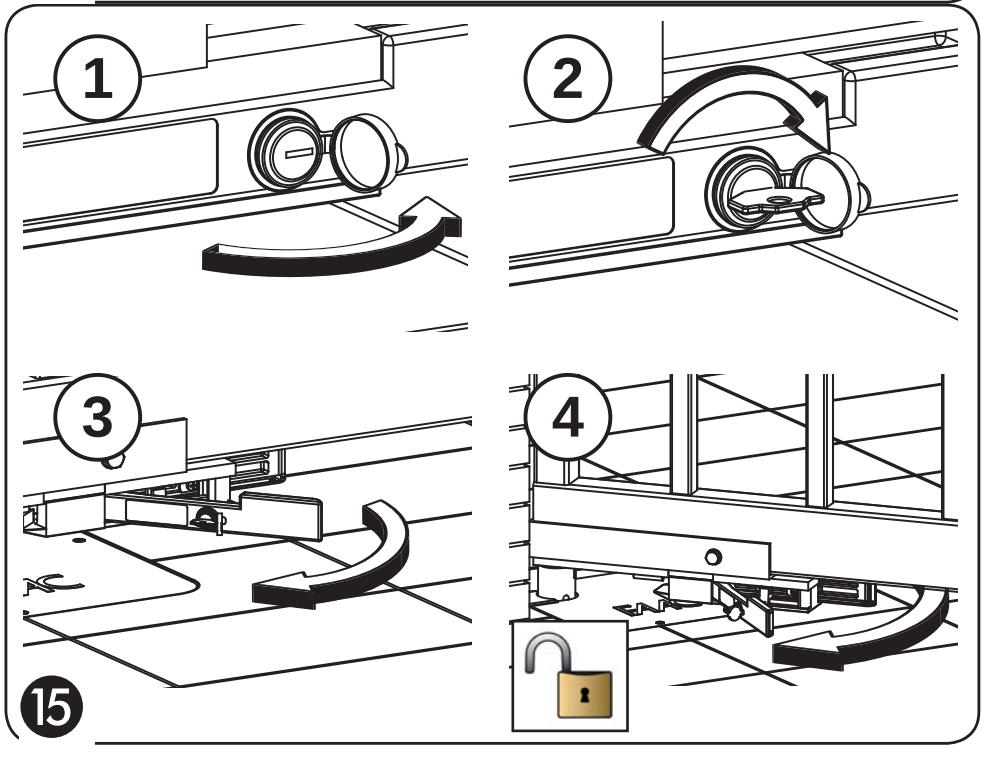

15

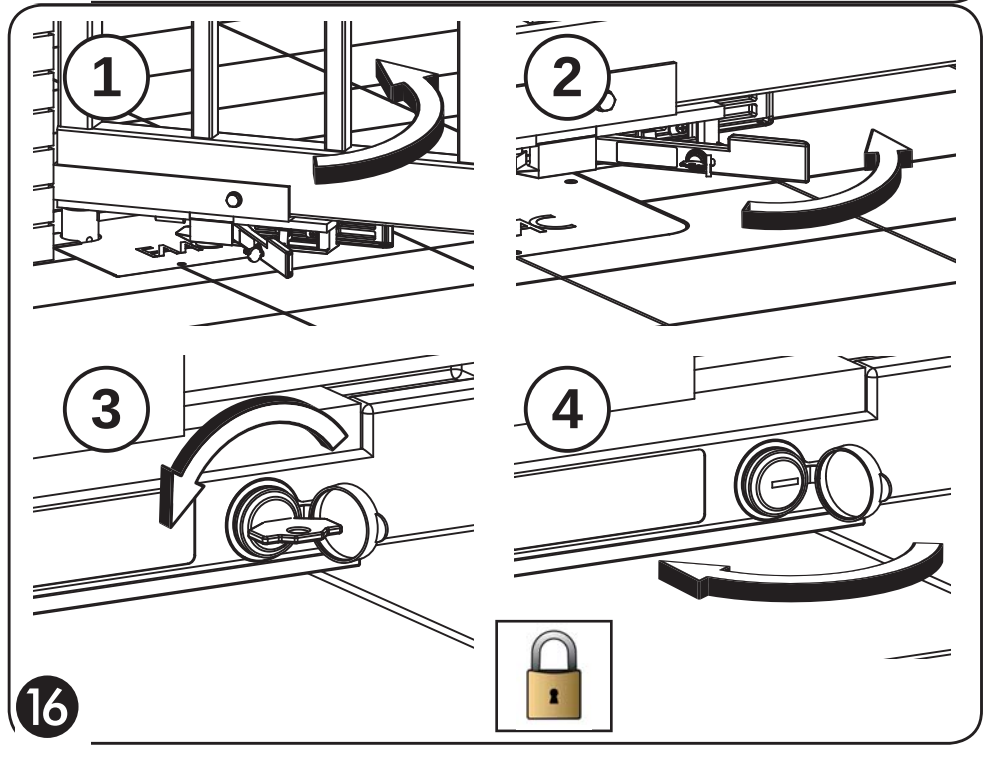

16

SEDE - HEADQUARTERS

FAAC S.p.A.
Via Calari, 10
40069 Zola Predosa (BO) - ITALY
Tel. +39 051 61724 - Fax +39 051 758518
www.faac.it - www.faacgroup.com

ASSISTENZA IN ITALIA

SEDE
tel. +39 051 6172501
www.faac.it/ita/assistenza

MILANO
tel +39 02 66011163
filiale.milano@faacgroup.com

PADOVA
tel +39 049 8700541
filiale.padova@faacgroup.com

ROMA
tel +39 06 41206137
filiale.roma@faacgroup.com

TORINO
tel +39 011 6813997
filiale.torino@faacgroup.com

FIRENZE
tel. +39 055 301194
filiale.firenze@faacgroup.com

SUBSIDIARIES

AUSTRIA
FAAC GMBH
Salzburg, Austria
tel. +43 662 8533950
www.faac.at
FAAC TUBULAR MOTORS
tel. +49 30 56796645
faactm.info@faacgroup.com
www.faac.at

GERMANY
FAAC GMBH
Freilassing, Germany
tel. +49 8654 49810
www.faac.de
FAAC TUBULAR MOTORS
tel. +49 30 5679 6645
faactm.info@faacgroup.com
www.faac.de

BENELUX
FAAC BENELUX NV/SA
Brugge, Belgium
tel. +32 50 320202
www.faacbenelux.com
FAAC TUBULAR MOTORS
Schaapweg 30
NL-6063 BA Vlodrop, Netherlands
tel. +31 475 406014
faactm.info@faacgroup.com
www.faacbenelux.com

AUSTRALIA
FAAC AUSTRALIA PTY LTD
Homebush – Sydney, Australia
tel. +61 2 87565644
www.faac.com.au

INDIA
FAAC INDIA PVT. LTD
Noida – Delhi, India
tel. +91 120 3934100/4199
www.faacindia.com

SWITZERLAND
FAAC AG
Altdorf, Switzerland
tel. +41 41 8713440
www.faac.ch

CHINA
FAAC SHANGHAI
Shanghai, China
tel. +86 21 68182970
www.faacgroup.cn

NORDIC REGIONS
FAAC NORDIC AB
Perstorp, Sweden
tel. +46 435 779500
www.faac.se

POLAND
FAAC POLSKA SP.ZO.O
Warszawa, Poland
tel. +48 22 8141422
www.faac.pl

UNITED KINGDOM
FAAC UK LTD.
Basingstoke - Hampshire, UK
tel. +44 1256 318100
www.faac.co.uk

SPAIN
F.A.A.C. SA
San Sebastián de los Reyes.
Madrid, Spain
tel. +34 91 6613112
www.faac.es

RUSSIA
FAAC RUSSIA LLC
Moscow, Russia
tel. +7 495 646 24 29
www.faac.ru

FRANCE
FAAC FRANCE
Saint Priest - Lyon, France
tel. +33 4 72218700
www.faac.fr
FAAC FRANCE - AGENCE PARIS
Massy - Paris, France
tel. +33 1 69191620
www.faac.fr
FAAC FRANCE - DEPARTEMENT VOLETS
Saint Denis de Pile - Bordeaux, France
tel. +33 5 57551890
fax +33 5 57742970
www.faac.fr

U.S.A.
FAAC INTERNATIONAL INC
Jacksonville, FL - U.S.A.
tel. +1 904 4488952
www.faacusa.com
FAAC INTERNATIONAL INC
Fullerton, California - U.S.A.
tel. +1 714 446 9800
www.faacusa.com

MIDDLE EAST
FAAC MIDDLE EAST BRANCH
Dubai Airport Free Zone - Dubai, UAE
tel. +971 42146733
www.faac.ae

TURKEY
FAAC OTOMATİK GEÇİS SİSTEMLERİ SAN. VE TİC. LTD. ŞTİ.
Çağlayan, Kağıthane, İstanbul (Turkey)
tel.+90 (0)212 – 3431311

58I0939 - Rev.A