SUN UP TO 700 KG, 24 VDC



Stylish design screwless at sight

Extremely silent mechanics

High technological materials resistant to weather conditions

The release system is ergonomic, efficient and easily accessible

CONTROL UNIT CT10324

+ CT10324 New 5-character / 16-segment display for more natural and intuitive reading

+ KUBE and KUBE PRO Optional programming with KUBE PRO wireless module (from FW version 2.0)







MODELS

CODE	DESCRIPTION	PCS PALLET
SUN4324	For sliding gates up to 400 Kg, 24 Vdc motor, control unit CT10324 with slowdown and electric limit switch. Integrated receiver	18
SUN7324	For sliding gates up to 700 Kg, 24 Vdc motor, control unit CT10324 with slowdown and electric limit switch. Integrated receiver	36
SUN11324M	For sliding gates up to 1100 Kg, 24 Vdc motor, control unit CT10324 with slowdown and magnetic limit switch	18

TECHNICAL DATA

		SUN4324	SUN7324	SUN11324M
MECHANICAL DATA				
speed	cm/s	26*	25*	20*
torque	Nm	18	26	38
working cycle	%	80	80	80
ELECTRICAL DATA				
control board		CT10324	CT10324	CT10324
power	Vac	230	230	230
consumption	A	1,2	1,5	1,8
absorbed power	W	250	345	360
capacitor	µF	-	-	-
thermoprotection	°C	-	-	-
GENERIC DATA				
protection degree	IP	44	44	44
dimensions (L - D - H)	mm		330 - 210 - 300	
weight	kg	10,7	13,6	14,5
working temperature	°C	-20 + 55	-20 + 55	-20 + 55
gate maximum weight	Kg	400	700	1100

* variable according to the gate weight
Models of 700 kg and upward are recommended for condominium installations

DIMENSIONS

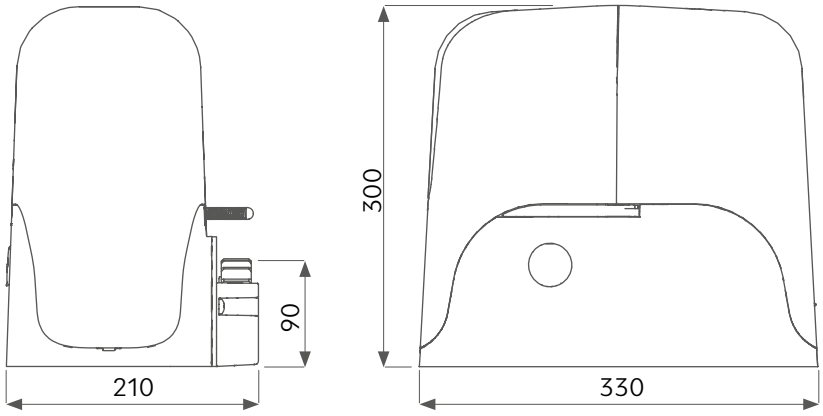

ACCESSORIES



RN800 *
M4 nylon rack L=1000 mm
for gates up to 800 kg

€/m



CREM-8 **
M4 zinc coated rack 30x8 mm
L=1000 mm

€/m



CREM-12 **
M4 zinc coated rack 30x12 mm
L=1000 mm

€/m

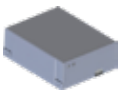

KBP
Kit of 1.3 Ah lead battery and
battery charger

PC 1

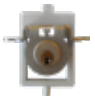

KCS
Unlock kit with key

PC 1



TWIN
Interface for master/slave
function (SUN7224)

PC 1



KUBEPRO
Wireless programming module

PC 1



KUBE
Wireless controlling module for
end user

PC 1

* pack of 10 pcs
** pack of 4 pcs