KSUN4024KKD



ELECTROMECHANICAL GEAR MOTOR FOR SLIDING GATES

KEY AUTOMATION

KSUN4024KKD

ELECTROMECHANICAL GEAR MOTOR FOR SLIDING GATES UP TO 400KG, 24 VDC WITH NIGHT LIGHT SYSTEM



- Built-in LED light
- Extremely silent mechanics protected by roboust die-cast and power-coated aluminum body
- UV-resistant plastic covers
- Simple and intuitive unlocking system with SUB remote
- Gear reduction with extra-large bearing with high performance
- High technological materials resistant weather conditions

CONTROL UNIT 14A

+ DYL Programming module 5 characters / 16 segments cable lenght 120 cm

+ KUBE & KUBE PRO Wireless programming and control modules via smartphone

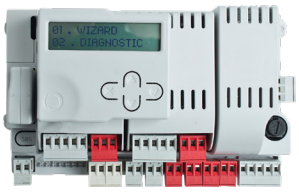

MODEL

CODE	DESCRIPTION
KSUN4024KKD	Kit for sliding gates up to 400 Kg, 24 Vdc motor, control unit 14A with slowdown, electric limit switch, FT43 photocells adjustable 180°, Sub44R and Kube. With night light function included

KIT COMPOSITION WITH INTEGRATED LED








	SUN4024D	14A	RX4K	FT43	SUB44R	KUBE
KSUN4024KKD	•	•	•	•	•	•

THE SUN4024 GEAR MOTOR

Programmable with Bluetooth interface for configuration and management via cloud.

Offers the possibility to add up to 20 additional LED lights to automatically illuminate the house's entrance during the night.

Single control unit compatible with sliding and swing gates

Style, design and technology that is expressed in the creation of a unique product.

An automation system with LED light integrated in the motor body

DIMENSIONS

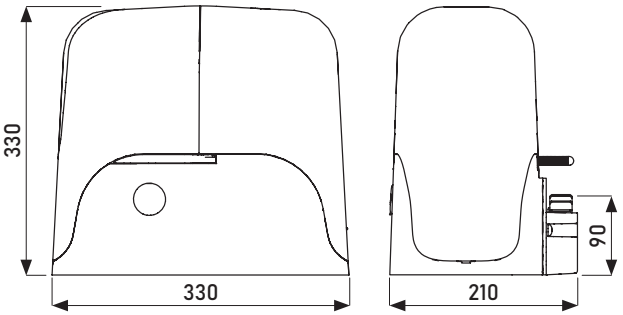

ACCESSORIES



RN800
M4 nylon rack L=1000 mm for gates up to 800 kg

€/m



CREM-8
M4 zinc coated rack 30x8 mm L=1000 mm

€/m



CREM-12
M4 zinc coated rack 30x12 mm L=1000 mm

€/m

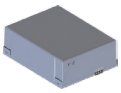

KBP
Kit of 1.3 Ah lead battery and battery charger

PC 1



KCS
Unlock kit with key

PC 1



TWIN
Interface for master/ slave function (SUN5024F, SUN7024 and SUN11024)

PC 1



DYL
Programming module Cable length 120 cm (only 14A board)

PC 1



KUBEPRO
Wireless programming module

PC 1



KUBE
Wireless controlling module for end user

PC 1



ECLIPSE
Full LED flashing and courtesy light

PC 1



SUB44R
Water resistant 4 channels transmitter, 433 MHz and 868 MHz, black colour

PC 1



550CABL045A00
Special cable for Eclipse flash light RG174 50 Ohm + 4 x 0,50 mm^2 (100 m)

PC 1



QUADRO
Night sensor

PC1

TECHNICAL CHARACTERISTICS

		SUN4024
Speed	cm/s	21
Torque	Nm	12
Working cycle	%	50
Control board		CC24FULL
Power	Vac (Vdc)	230 (24)
Consumption	A	1,1
Absorbed power	W	250
Thermoprotection	°C	-
Integrated Lights		yes
Protection degree	IP	44
Dimensions (L - D - H)	mm	330 - 210 - 300
Weight	Kg	12
Working temperature	°C	-20+55
Leaves maximum weight	Kg	400

Key Automation Srl
Via Meucci, 23 • 30027 San Donà di Piave (VE)
T. +39 0421 307456 • info@keyautomation.it
www.keyautomation.com