SIROCCO

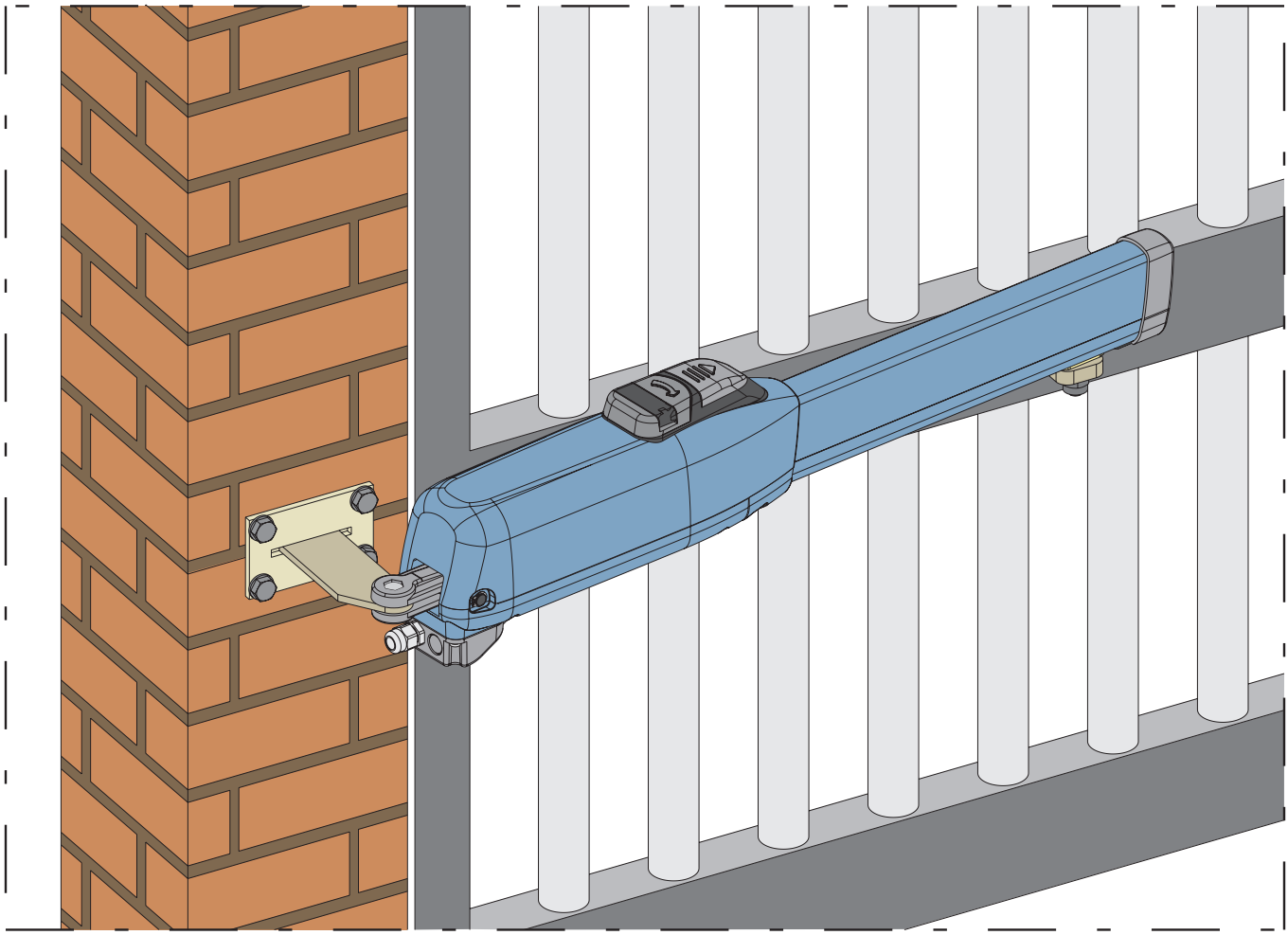

GENIUS®

COMPANY
WITH QUALITY SYSTEM
CERTIFIED BY DNV
= UNI EN ISO 9001/2000=

CE

AVVERTENZE PER L'INSTALLATORE

OBBLIGHI GENERALI PER LA SICUREZZA

1) **ATTENZIONE! È importante per la sicurezza delle persone seguire attentamente tutta l'istruzione. Una errata installazione o un errato uso del prodotto può portare a gravi danni alle persone.**
2) Leggere attentamente le istruzioni prima di iniziare l'installazione del prodotto.
3) I materiali dell'imballaggio (plastica, polistirolo, ecc.) non devono essere lasciati alla portata dei bambini in quanto potenziali fonti di pericolo.
4) Conservare le istruzioni per riferimenti futuri.
5) Questo prodotto è stato progettato e costruito esclusivamente per l'utilizzo indicato in questa documentazione. Qualsiasi altro utilizzo non espressamente indicato potrebbe pregiudicare l'integrità del prodotto e/o rappresentare fonte di pericolo.
6) GENIUS declina qualsiasi responsabilità derivata dall'uso improprio o diverso da quello per cui l'automatismo è destinato.
7) Non installare l'apparecchio in atmosfera esplosiva: la presenza di gas o fumi infiammabili costituisce un grave pericolo per la sicurezza.
8) Gli elementi costruttivi meccanici devono essere in accordo con quanto stabilito dalle Norme EN 12604 e EN 12605.
   Per i Paesi extra-CEE, oltre ai riferimenti normativi nazionali, per ottenere un livello di sicurezza adeguato, devono essere seguite le Norme sopra riportate.
9) GENIUS non è responsabile dell'inosservanza della Buona Tecnica nella costruzione delle chiusure da motorizzare, nonché delle deformazioni che dovessero intervenire nell'utilizzo.
10) L'installazione deve essere effettuata nell'osservanza delle Norme EN 12453 e EN 12445. Il livello di sicurezza dell'automazione deve essere C+D.
11) Prima di effettuare qualsiasi intervento sull'impianto, togliere l'alimentazione elettrica e scollegare le batterie.
12) Prevedere sulla rete di alimentazione dell'automazione un interruttore onnipolare con distanza d'apertura dei contatti uguale o superiore a 3 mm. È consigliabile l'uso di un magnetotermico da 6A con interruzione onnipolare.
13) Verificare che a monte dell'impianto vi sia un interruttore differenziale con soglia da 0,03 A.
14) Verificare che l'impianto di terra sia realizzato a regola d'arte e collegarvi le parti metalliche della chiusura.
15) L'automazione dispone di una sicurezza intrinseca antischiacciamento costituita da un controllo di coppia. E' comunque necessario verificarne la sogli di intervento secondo quanto previsto dalle Norme indicate al punto 10.
16) I dispositivi di sicurezza (norma EN 12978) permettono di proteggere eventuali aree di pericolo da **Rischi meccanici di movimento**, come ad Es. schiacciamento, convogliamento, cesoiamento.
17) Per ogni impianto è consigliato l'utilizzo di almeno una segnalazione luminosa nonché di un cartello di segnalazione fissato adeguatamente sulla struttura dell'infisso, oltre ai dispositivi citati al punto "16".
18) GENIUS declina ogni responsabilità ai fini della sicurezza e del buon funzionamento dell'automazione, in caso vengano utilizzati componenti dell'impianto non di produzione GENIUS.
19) Per la manutenzione utilizzare esclusivamente parti originali GENIUS.
20) Non eseguire alcuna modifica sui componenti facenti parte del sistema d'automazione.
21) L'installatore deve fornire tutte le informazioni relative al funzionamento manuale del sistema in caso di emergenza e consegnare all'Utente utilizzatore dell'impianto il libretto d'avvertenze allegato al prodotto.
22) Non permettere ai bambini o persone di sostare nelle vicinanze del prodotto durante il funzionamento.
23) Tenere fuori dalla portata dei bambini radiocomandi o qualsiasi altro datore di impulso, per evitare che l'automazione possa essere azionata involontariamente.
24) Il transito tra le ante deve avvenire solo a cancello completamente aperto.
25) L'Utente utilizzatore deve astenersi da qualsiasi tentativo di riparazione o d'intervento diretto e rivolgersi solo a personale qualificato.
26) **Tutto quello che non è previsto espressamente in queste istruzioni non è permesso**

IMPORTANT NOTICE FOR THE INSTALLER

GENERAL SAFETY REGULATIONS

1) **ATTENTION! To ensure the safety of people, it is important that you read all the following instructions. Incorrect installation or incorrect use of the product could cause serious harm to people.**
2) Carefully read the instructions before beginning to install the product.
3) Do not leave packing materials (plastic, polystyrene, etc.) within reach of children as such materials are potential sources of danger.
4) Store these instructions for future reference.
5) This product was designed and built strictly for the use indicated in this documentation. Any other use, not expressly indicated here, could compromise the good condition/operation of the product and/or be a source of danger.
6) GENIUS declines all liability caused by improper use or use other than that for which the automated system was intended.
7) Do not install the equipment in an explosive atmosphere: the presence of inflammable gas or fumes is a serious danger to safety.
8) The mechanical parts must conform to the provisions of Standards EN 12604 and EN 12605.
   For non-EU countries, to obtain an adequate level of safety, the Standards mentioned above must be observed, in addition to national legal regulations.
9) GENIUS is not responsible for failure to observe Good Technique in the construction of the closing elements to be motorised, or for any deformation that may occur during use.
10) The installation must conform to Standards EN 12453 and EN 12445. The safety level of the automated system must be C+D.
11) Before attempting any job on the system, cut out electrical power and disconnect the batteries.
12) The mains power supply of the automated system must be fitted with an all-pole switch with contact opening distance of 3mm or greater. Use of a 6A thermal breaker with all-pole circuit break is recommended.
13) Make sure that a differential switch with threshold of 0.03 A is fitted upstream of the system.
14) Make sure that the earthing system is perfectly constructed, and connect metal parts of the means of the closure to it.
15) The automated system is supplied with an intrinsic anti-crushing safety device consisting of a torque control. Nevertheless, its tripping threshold must be checked as specified in the Standards indicated at point 10.
16) The safety devices (EN 12978 standard) protect any danger areas against **mechanical movement Risks**, such as crushing, dragging, and shearing.
17) Use of at least one indicator-light is recommended for every system, as well as a warning sign adequately secured to the frame structure, in addition to the devices mentioned at point "16".
18) GENIUS declines all liability as concerns safety and efficient operation of the automated system, if system components not produced by GENIUS are used.
19) For maintenance, strictly use original parts by GENIUS.
20) Do not in any way modify the components of the automated system.
21) The installer shall supply all information concerning manual operation of the system in case of an emergency, and shall hand over to the user the warnings handbook supplied with the product.
22) Do not allow children or adults to stay near the product while it is operating.
23) Keep remote controls or other pulse generators away from children, to prevent the automated system from being activated involuntarily.
24) Transit through the leaves is allowed only when the gate is fully open.
25) The user must not attempt any kind of repair or direct action whatever and contact qualified personnel only.
26) **Anything not expressly specified in these instructions is not permitted.**

CONSIGNES POUR L'INSTALLATEUR

RÈGLES DE SÉCURITÉ

1) **ATTENTION! Il est important, pour la sécurité des personnes, de suivre à la lettre toutes les instructions. Une installation erronée ou un usage erroné du produit peut entraîner de graves conséquences pour les personnes.**
2) Lire attentivement les instructions avant d'installer le produit.
3) Les matériaux d'emballage (matière plastique, polystyrène, etc.) ne doivent pas être laissés à la portée des enfants car ils constituent des sources potentielles de danger.
4) Conserver les instructions pour les références futures.
5) Ce produit a été conçu et construit exclusivement pour l'usage indiqué dans cette documentation. Toute autre utilisation non expressément indiquée pourrait compromettre l'intégrité du produit et/ou représenter une source de danger.
6) GENIUS décline toute responsabilité qui dériverait d'usage impropre ou différent de celui auquel l'automatisme est destiné.
7) Ne pas installer l'appareil dans une atmosphère explosive: la présence de gaz ou de fumées inflammables constitue un grave danger pour la sécurité.
8) Les composants mécaniques doivent répondre aux prescriptions des Normes EN 12604 et EN 12605.
   Pour les Pays extra-CEE, l'obtention d'un niveau de sécurité approprié exige non seulement le respect des normes nationales, mais également le respect des Normes susmentionnées.
9) GENIUS n'est pas responsable du non-respect de la Bonne Technique dans la construction des fermetures à motoriser, ni des déformations qui pourraient intervenir lors de l'utilisation.
10) L'installation doit être effectuée conformément aux Normes EN 12453 et EN 12445. Le niveau de sécurité de l'automatisme doit être C+D.
11) Couper l'alimentation électrique et déconnecter la batterie avant toute intervention sur l'installation.
12) Prévoir, sur le secteur d'alimentation de l'automatisme, un interrupteur omnipolaire avec une distance d'ouverture des contacts égale ou supérieure à 3 mm. On recommande d'utiliser un magnétothermique de 6A avec interruption omnipolaire.
13) Vérifier qu'il y ait, en amont de l'installation, un interrupteur différentiel avec un seuil de 0,03 A.
14) Vérifier que la mise à terre est réalisée selon les règles de l'art et y connecter les pièces métalliques de la fermeture.
15) L'automatisme dispose d'une sécurité intrinsèque anti-écrasement, formée d'un contrôle du couple. Il est toutefois nécessaire d'en vérifier le seuil d'intervention suivant les prescriptions des Normes indiquées au point 10.
16) Les dispositifs de sécurité (norme EN 12978) permettent de protéger des zones éventuellement dangereuses contre les **Risques mécaniques du mouvement**, comme l'écrasement, l'acheminement, le cisaillement.
17) On recommande que toute installation soit doté au moins d'une signalisation lumineuse, d'un panneau de signalisation fixé, de manière appropriée, sur la structure de la fermeture, ainsi que des dispositifs cités au point "16".
18) GENIUS décline toute responsabilité quant à la sécurité et au bon fonctionnement de l'automatisme si les composants utilisés dans l'installation n'appartiennent pas à la production GENIUS.
19) Utiliser exclusivement, pour l'entretien, des pièces GENIUS originales.
20) Ne jamais modifier les composants faisant partie du système d'automatisme.
21) L'installateur doit fournir toutes les informations relatives au fonctionnement manuel du système en cas d'urgence et remettre à l'Usager qui utilise l'installation les "Instructions pour l'Usager" fournies avec le produit.
22) Interdire aux enfants ou aux tiers de stationner près du produit durant le fonctionnement.
23) Eloigner de la portée des enfants les radiocommandes ou tout autre générateur d'impulsions, pour éviter tout actionnement involontaire de l'automatisme.
24) Le transit entre les vantaux ne doit avoir lieu que lorsque le portail est complètement ouvert.
25) L'Usager qui utilise l'installation doit éviter toute tentative de réparation ou d'intervention directe et s'adresser uniquement à un personnel qualifié.
26) **Tout ce qui n'est pas prévu expressément dans ces instructions est interdit.**

CONTENTS

Declaration of conformity	**pag.11**
Description	**pag.12**
Technical specifications	**pag.13**
Installation	**pag.13**
Testing the automated system	**pag.19**
Special applications	**pag.20**
Manual operation	**pag.20**
Maintenance	**pag.20**
Repairs	**pag.20**
Available accessories	**pag.20**

CE DECLARATION OF CONFORMITY FOR MACHINES
(DIRECTIVE 98/37/CE)

Manufacturer: GENIUS S.p.a.

Address: Via Padre Elzi, 32 - 24050 - Grassobbio BERGAMO - ITALY

Declares that: **SIROCCO** mod. operator

- is built to be integrated into a machine or to be assembled with other machinery to create a machine under the provisions of Directive 98/37/CE;
- conforms to the essential safety requirements of the following EEC directives:

  73/23 EEC and subsequent amendment 93/68/EEC.
  89/336 EEC and subsequent amendment 92/31/EEC and 93/68/EEC

and also declares that the machinery must not be put into service until the machine in which it will be integrated or of which it will become a component has been identified and declared as conforming to the provisions of Directive 98/37/CE.

Grassobbio, 01-06-2005

The Managing Director
D.Giannantoni

ENGLISH

2. DESCRIPTION

The **SIROCCO** automated system for swing gates is an electro-mechanical non-reversing operator that transmits motion to the leaf via a worm screw system.
The operator is available in many versions covering therefore every installation requirement. The "LS" versions are equipped with opening and closing limit switches. Every version is supplied with opening and closing mechanical travel stops.
The non-reversing system ensures the leaf is mechanically locked when the motor is not operating. A convenient and safe release system with customised key makes it possible to manually move the leaf in the event of a malfunction or of a power failure.

ATTENTION:
- **The correct operation and the declared specifications only apply if GENIUS accessories and safety devices are used.**
- **As no mechanical clutch device is fitted, a control unit with adjustable electronic clutch is required to ensure the necessary anti-crushing safety.**
- **The SIROCCO automated system was designed and built for controlling vehicle access. Avoid any other use whatever.**

Pos.	Description	Pos.	Description
1	Gearmotor	6	Front bracket
2	Release device	7	Rear fitting
3	Limit switch cover	8	Rear fitting pin
4	Closing limit switch	9	Rear bracket
5	Opening limit switch	10	Terminal board cover

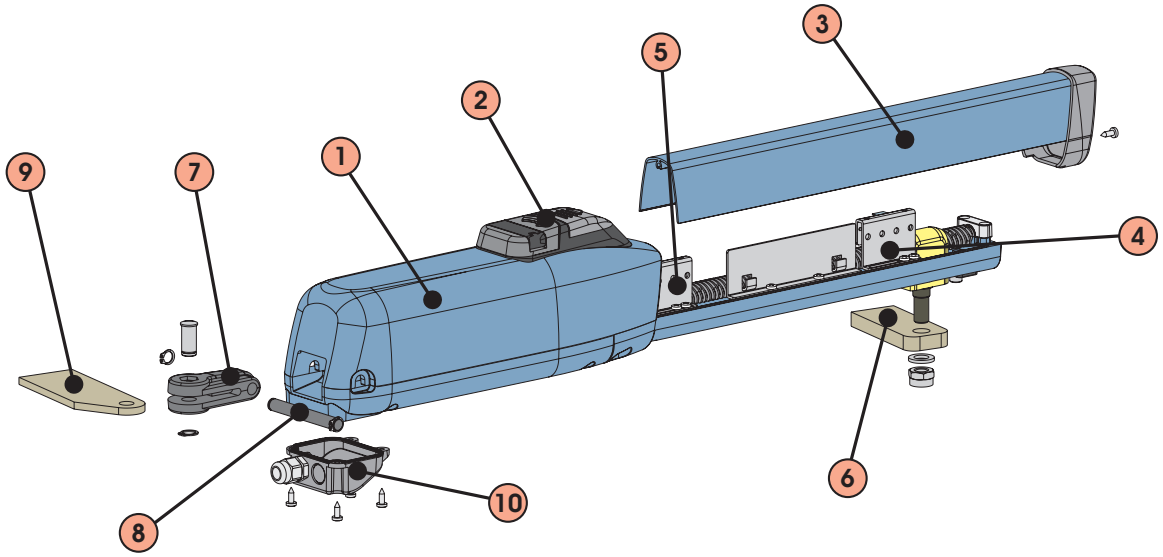

Fig. 1

2.1. Dimensions

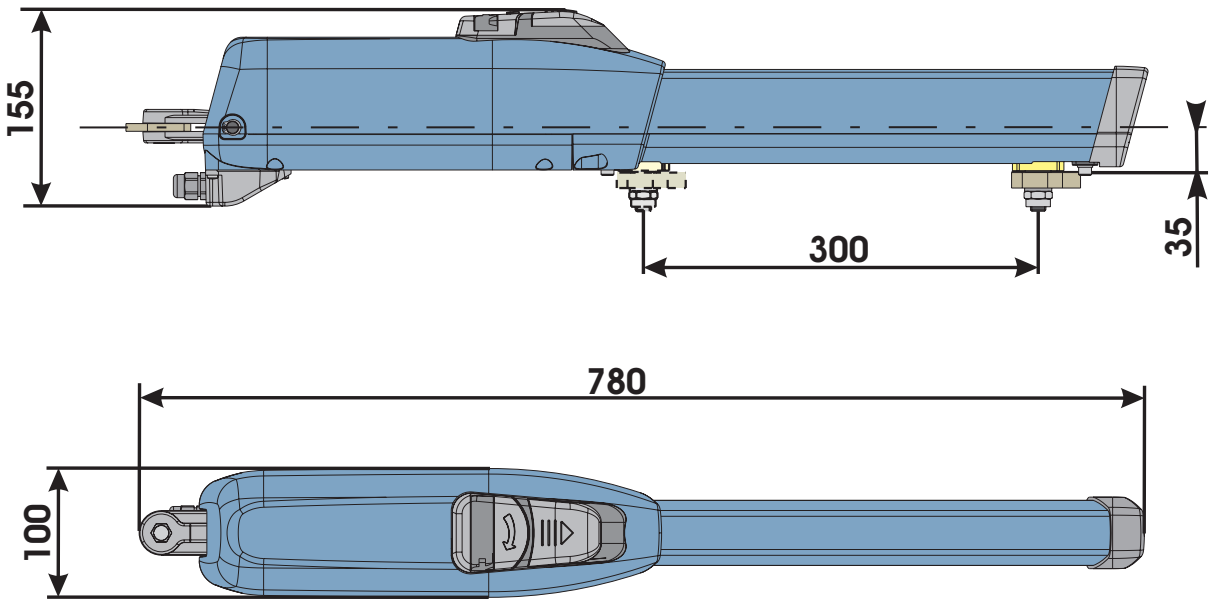

Fig. 2

3. TECHNICAL SPECIFICATIONS

TECHNICAL SPECIFICATIONS	250	250 LS	2524	2524 LS	250 -115V-	250 -115V- LS
Power supply	230 V~		24 Vdc		115 V~	
Power (W)	250		70		260	
Current (A)	1,1		3		2.2	
Thermal protection (°C)	140		-		140	
Capacitor (μF)	6,3		-		20	
Thrust (daN)	200		250		200	
Travel (mm)	300 (1)					
Speed (cm/sec)	1,6				1,85	
Leaf max. (m)	2,5 (2)					
Type and use frequency at 20° C	S3 - 30%	S3 - 35%	100%		S3 - 30%	S3 - 35%
Approximate min. cycle/hour at 20° C	~30		~100		~30	
Operating ambient temperature (°C)	-20 +55					
Operator weight (Kg)	6,5					
Operator length (mm)	see fig.2					
Operator dimensions (mm)	see fig.2					
Protection class	IP54					

(1) **If no closing and opening mechanical travel stops are used, the operator travel is 350 mm**
(2) **With leaves exceeding 1.8 m the fitting of an electric lock is required to ensure the leaf locking**

3.1. Versions

MODEL	VERSION
SIROCCO 250	230V~ gearmotor with opening/closing mechanical travel stops
SIROCCO 250 LS	230V~ gearmotor with opening/closing mechanical travel stops and opening/closing limit switches
SIROCCO 2524	24Vdc gearmotor with opening/closing mechanical travel stops
SIROCCO 2524 LS	24Vdc gearmotor with opening/closing mechanical travel stops and opening/closing limit switches
SIROCCO 250 -115V-	115V~ gearmotor with opening/closing mechanical travel stops
SIROCCO 250 -115V- LS	115V~ gearmotor with opening/closing mechanical travel stops and opening/closing limit switches

For CSA-UL approved operators, control unit 455 MPS UL 115 must be used in order to maintain the approval.

4. INSTALLATION

4.1. Electrical set-up (standard system)

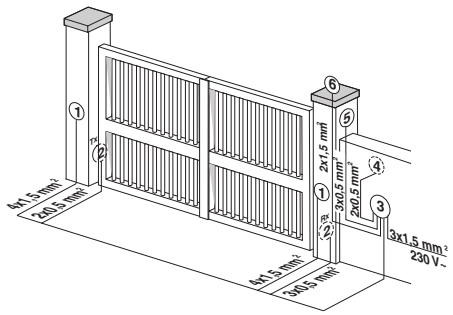

Pos.	Description
1	Operators
2	Photocells
3	Control board
4	Key-operated push-button
5	Receiver
6	Flashing lamp

Fig. 3

Notes:
- Use suitable tubes and/or hoses to lay electric cables
- To avoid any kind of interference always separate low-voltage accessories and control cables from 230/115 V~ power supply cables using separate sheaths.

4.2. Preliminary checks

To ensure a correct operation of the automated system, make sure the following requirements are observed as for the gate structure (existing or to be realised):
- the mechanical parts must conform to the provisions of Standards EN 12604 and EN 12605.
- leaf length in compliance with the operator specifications (see paragraph 2.1).
- sturdy and stiff structure of the leaves, suitable for automation
- regular and uniform movement of the leaves, without any friction and dragging during their entire opening
- stiff hinges in good conditions
- presence of both opening and closing mechanical limit stops (they are not necessary if opening and closing mechanical travel stops are used)
- presence of an efficient earthing for electrical connection of the operator

Perform any necessary metalwork job before installing the automated system.

The condition of the gate structure directly affects the reliability and safety of the automated system.

ENGLISH

4.3. Installation dimensions

Determine the fitting position of the operator with reference to Fig.4. During this phase it is important to define if the mechanical travel stops are to be used: by eliminating the mechanical travel stops the operator travel increases thus changing the installation dimensions **A** and **B**.
Check with care if the distance between the open leaf and any obstacles (walls, fences etc.) is higher than the operator

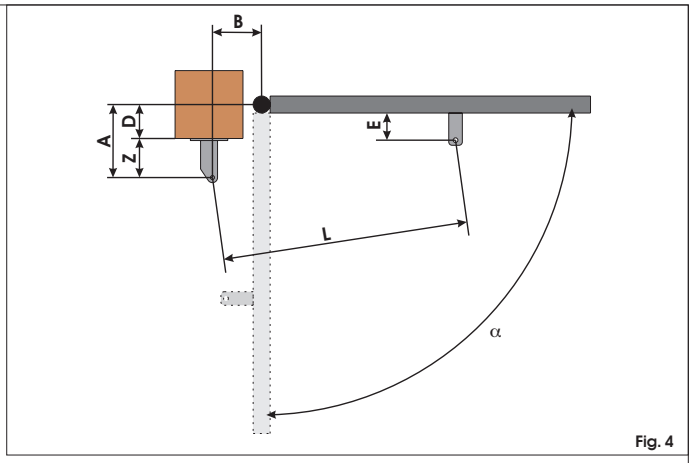

Fig. 4

Model	a	A	B	C (1)	D (2)	Z (3)	L	E (3)
SIROCCO with opening and closing stop	90°	140	140	280	80	60	675	85
	110°	120	135	295	65	55	675	
SIROCCO with opening stop	90°	150	150	300	90	60	690	90
	110°	135	135	310	80	55	690	
SIROCCO without opening and closing stop	90°	160	160	320	100	60	690	95
	110°	145	145	330	85	60	690	

dimensions
(1) **operator useful travel** (2) **max. dimension** (3) **min. dimension**

4.3.1. General rules to determine the installation dimensions

- to obtain **90°** leaf openings **: A+B=C**
- to obtain leaf openings **exceeding 90° : A+B<C**
- **Smaller A and B dimensions determine higher peripheral speed of the leaf.**
- **Limit the difference between A and B dimension within 4 cm**: higher differences cause great speed variations during the gate opening and closing movement.
- Keep a **Z** dimension in such a way that the operator does not strike the pillar.
- **in the LS versions the limit switches are triggered for the first and the last 30 mm. Therefore use such A and B dimensions in order to use the whole operator travel. Shorter travels could limit or cancel the limit switch adjustment range.**
- **The mechanical travel stops operate for the first and the last 30 mm of the travel; shorter travels could limit or cancel the adjustment range.**

If the pillar dimensions or the hinge position do not allow the installation of the operator, a niche on the pillar, as shown in Fig. 5, should be created in order to maintain the A dimension as determined. The niche should be dimensioned in such a way to enable easy installation, operator rotation and operation of the release device.

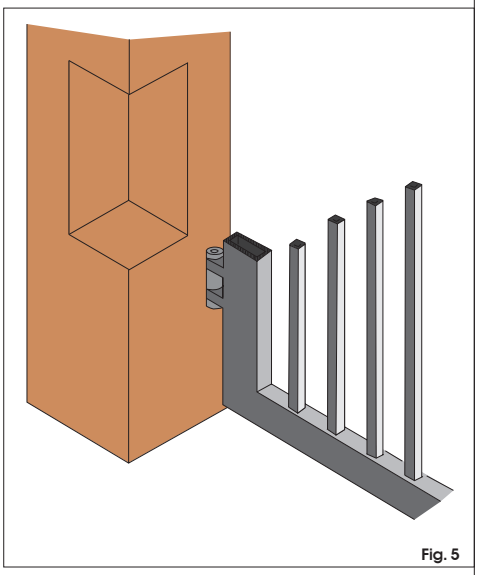
Fig. 5

4.4. Installing the operators

1) Fix the rear bracket in the position determined before. In the event of iron pillar carefully weld the bracket directly on the pillar (Fig.6). In the event of masonry pillar, use the suitable plate (optional) for the fixing to screw (Fig.7) by making use of suitable fastening systems. Then carefully weld the bracket to the plate.

During the fastening operations, check if the bracket is perfectly horizontal by means of a level.

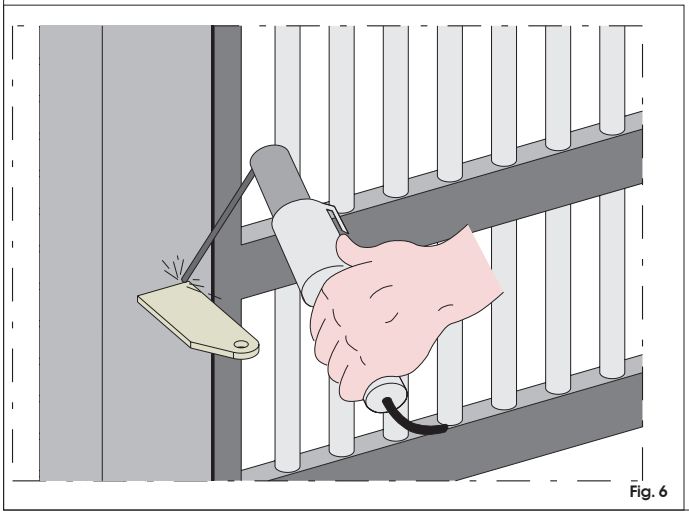
Fig. 6

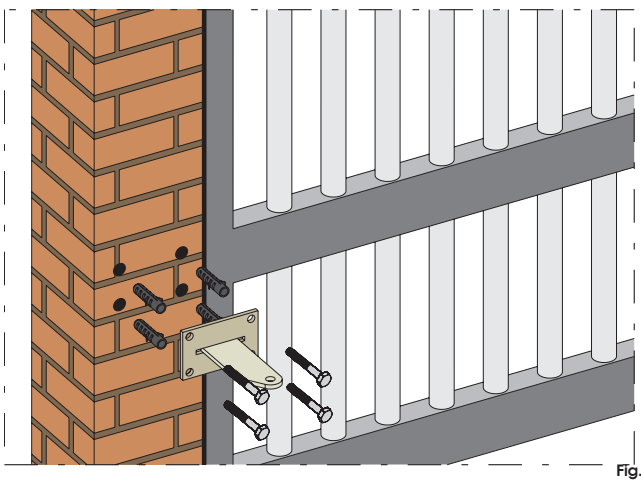
Fig. 7

2) Assemble the rear fitting to the operator as shown in Fig.8.

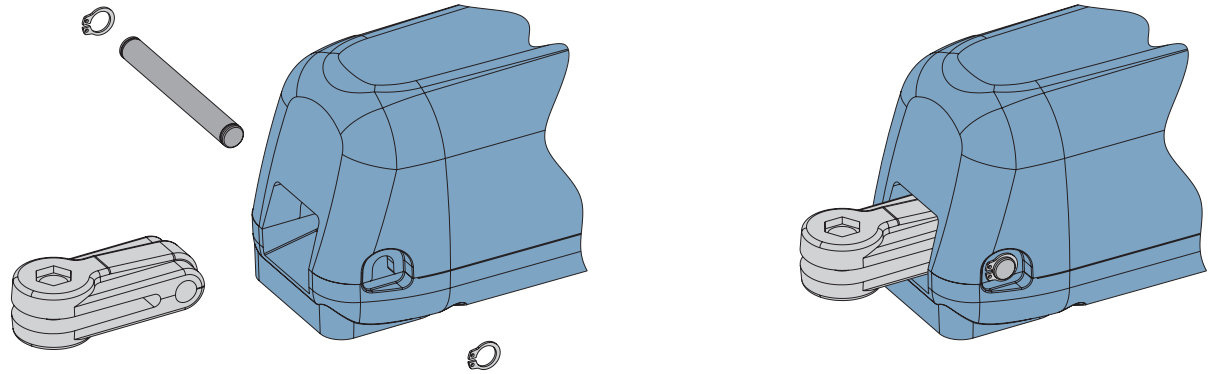

Fig. 8

3) Check if the front fitting is in the correct position as shown in Fig.9 (with closing mechanical travel stop) or in Fig.10 (without closing mechanical travel stop). If this is not the case, temporarily supply power to the operator to position the fitting.

ATTENTION: The operator can be moved by hand only if it is installed on the gate and in released position (see paragraph 6).

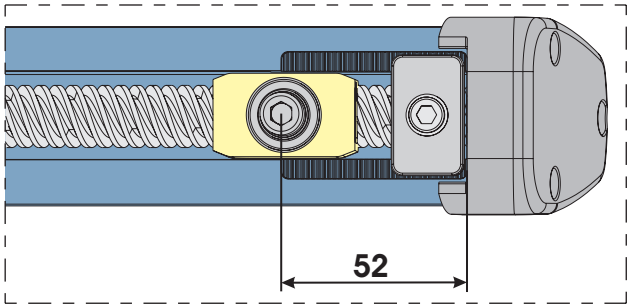

Fig. 9

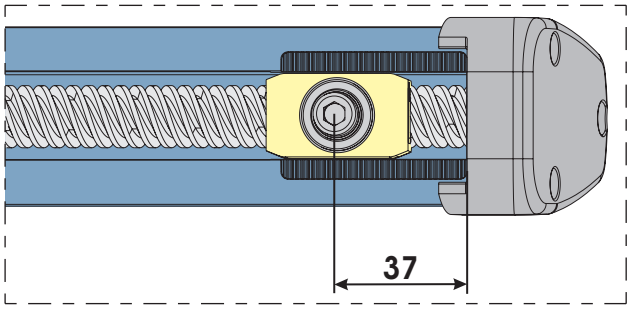

Fig. 10

4) Assemble the front bracket as shown in Fig.11. A hexagonal seat is located in the lower part of the fitting CH=5 (Fig.11 ref. A) to make the assembling operations easier.

Attention: before fastening the operator on the front bracket you have just welded, wait for the bracket to cool.

5) Fix the operator to the rear bracket by means of the supplied pins as shown in Fig.12.

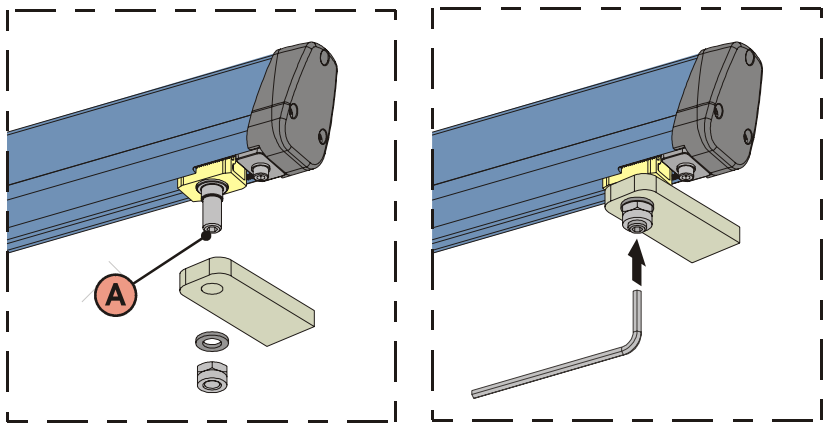

Fig. 11

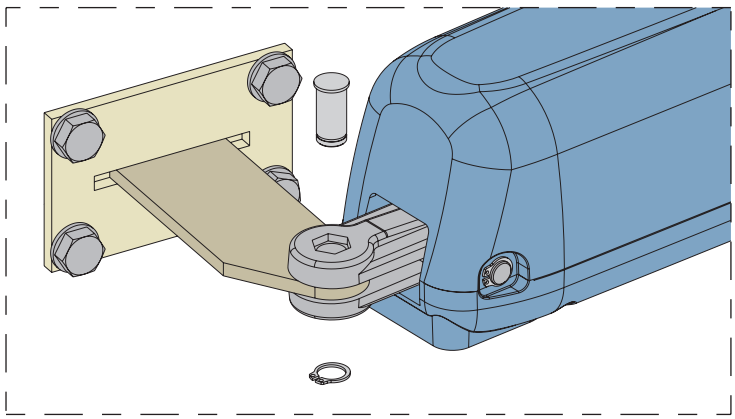

Fig. 12

6) Close the leaf and, keeping the operator in a perfect horizontal position, determine the fastening point of the front bracket (Fig.13).
7) Temporarily fix the front bracket with two welding spots (Fig.13).

Note: if the gate structure does not allow a fix bracket fastening it is necessary to create a sturdy supporting base in the gate structure.

8) Release the operator (see paragraph 6) and manually check if the gate can completely open without hindrances and stop at the mechanical travel stops as well as if the leaf moves regularly without any friction.
9) Carry out the necessary corrective measures and repeat from point 8.
10) Temporarily release the operator from the front bracket and weld the bracket definitively.

Note: we recommend to grease all the fastening pins of the fittings.

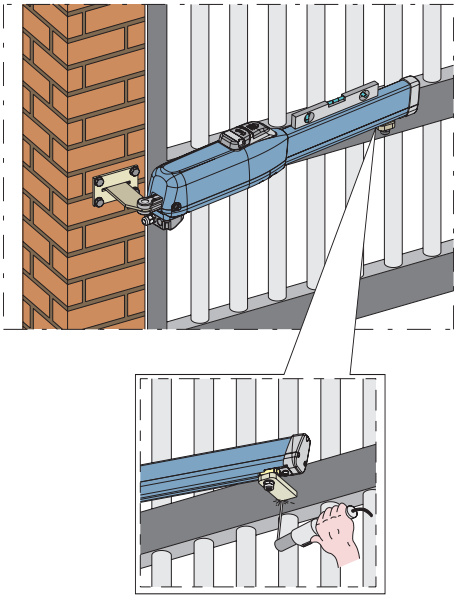

Fig. 13

4.5. Wiring the operator

A terminal board is fitted in the lower part of the operator for the connection of the motor, of any limit switch and for the earthing of the operator.

IMPORTANT : To connect the motor, the supplied cable must be used for the mobile section, or a cable for mobile laying from the outside.

Motor wiring operations:
1) Open one of the two pre-drilled holes in the supplied cover, Fig.14; in case of operators with limit switches, open both holes.
2) Fit the supplied cable gland.
3) Connect the motor and the earthing with reference to Fig.15 and to the table.

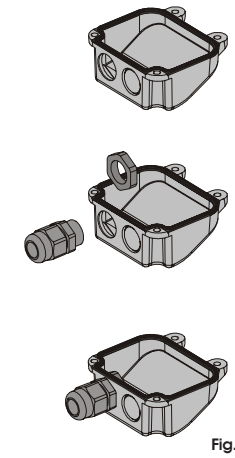

Fig. 14

To maintain approval for CSA-UL approved operators, position the capacitor (secured in a stable manner) inside a CSA-UL approved enclosure.

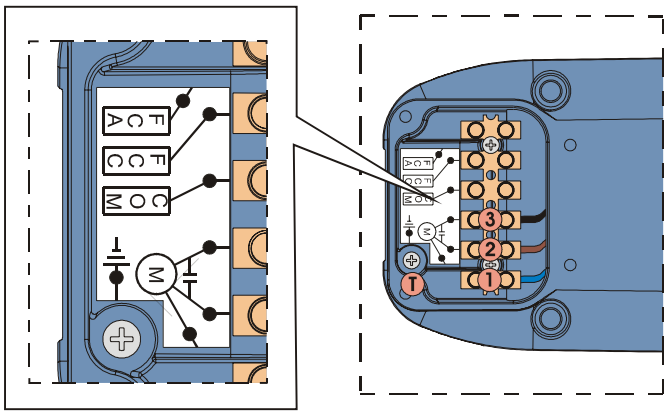

SIROCCO 230 V~ (115V~)		
POS.	**COLOUR**	**DESCRIPTION**
1	Blue (White)	Common cable
2	Brown (Red)	Phase 1
3	Black (Black)	Phase 2
T	Yellow / Green (Green)	Earthing
SIROCCO 24 V dc		
POS.	**COLOUR**	**DESCRIPTION**
1	Blue	Phase 1
2	Not used	/
3	Brown	Phase 2
T	Not used	/

Fig. 15

4) Close the cover with the four supplied screws, Fig.16.

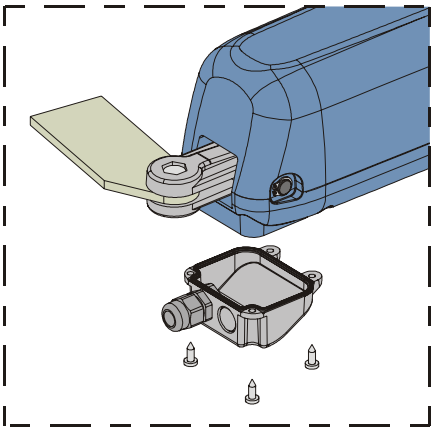

Fig. 16

4.6. Mechanical travel stops

The **SIROCCO** operators are equipped with opening and closing mechanical travel stops. They can be used instead of the leaf mechanical limit stops. To adjust the mechanical travel stops operate as follows:

4.6.1. Adjusting the opening mechanical travel stop

1) Set the operator for manual operation, see paragraph 6
2) Manually move the leaf in opening position.
3) Loosen the fastening screw, Fig.17 ref.A. Do not remove the screw.
4) Move the stop near the fitting as shown in Fig.18.

IMPORTANT: The mechanical stop works coupled to a toothed sector, Fig. 17 ref. B. If there are any troubles during the movement, make sure that the coupling is free. DO NOT FORCE.

5) Re-tighten the securing screw, checking correct coupling to the toothed sector.

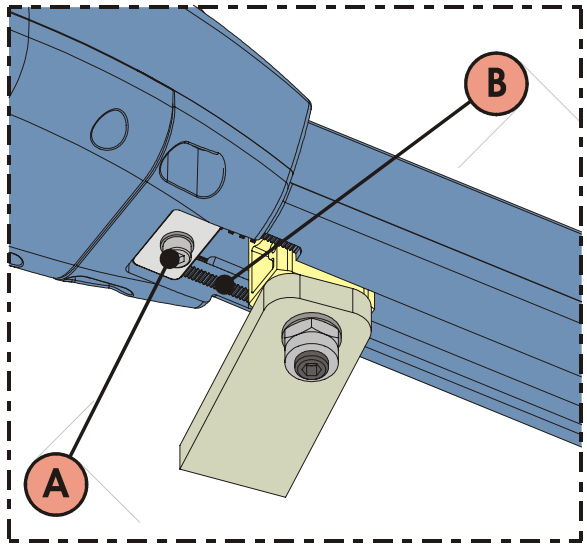

Fig. 17

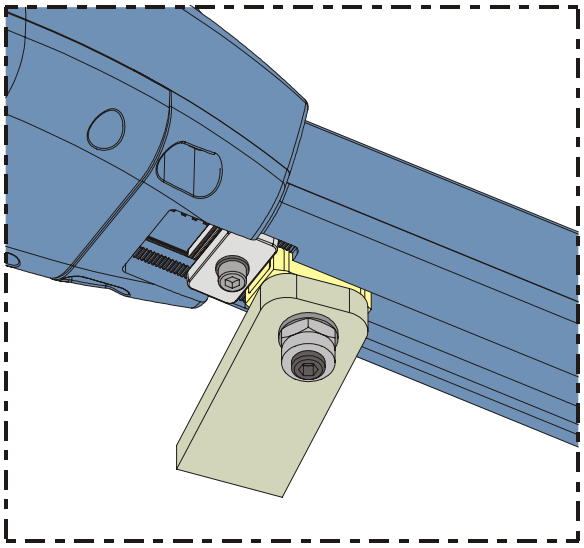
Fig. 18

4.6.2. Adjusting the closing mechanical travel stop

1) Set the operator for manual operation, see paragraph 6
2) Manually move the leaf in closing position.
3) Loosen the fastening screw, Fig.19 ref.A. Do not remove the screw.
4) Move the stop near the fitting as shown in Fig.20.

IMPORTANT: The mechanical stop works coupled to a toothed sector, Fig. 19 ref. B. If there are any troubles during the movement, make sure that the coupling is free. DO NOT FORCE.

5) Re-tighten the securing screw, checking correct coupling to the toothed sector.

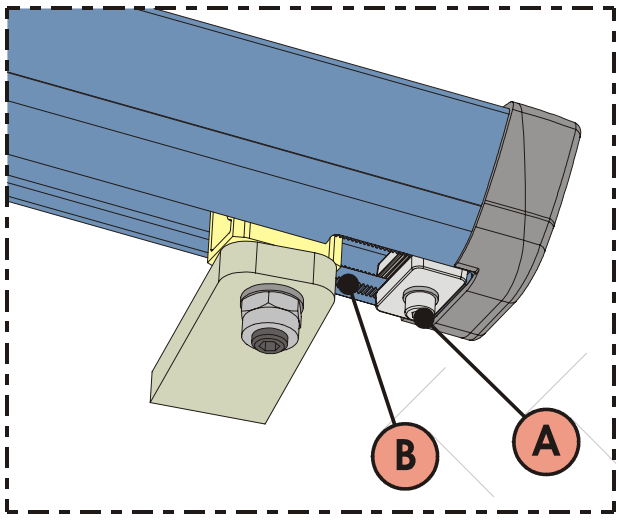

Fig. 19

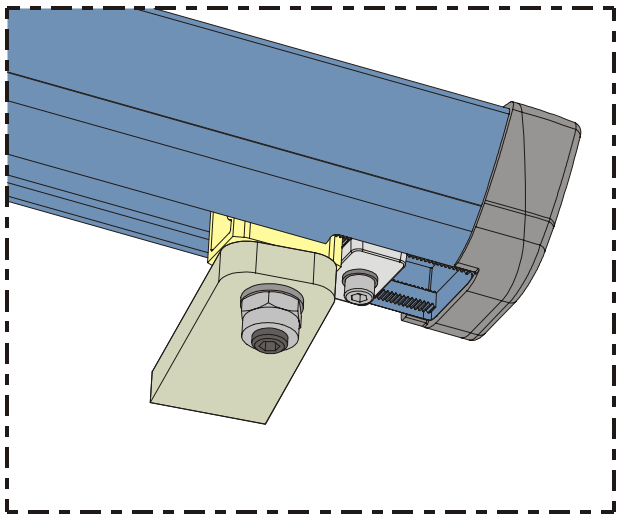
Fig. 20

4.7. Limit switches

The "**LS**" models are equipped with opening and closing limit switches. Therefore they require the use of a control board able to control these inputs.

Note: The limit switches are triggered for the first and the last 30 mm of the travel. Therefore the operator should use the whole available travel during the opening phase. Shorter travels can limit or completely cancel the limit switch adjustment range.

4.7.1. Wiring the limit switches

The limit switches are wired in the same terminal board where the motor wiring has been carried out. Wire the limit switches as follows:

1) Open the second pre-drilled hole in the cover, Fig.21.
2) Fit the supplied cable gland, Fig.21
3) Insert the cable and connect it to the terminals observing the colours specified in the table of Fig.22.
4) Close the cover with the four supplied screws.

Notes:

- **For the limit switch connection use the cable for the external movable laying with wires having a cross section of 0.5 mm².**
- **During the wiring operations, observe the wire colours as specified in the table of Fig.22.**

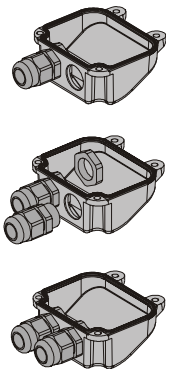

Fig. 21

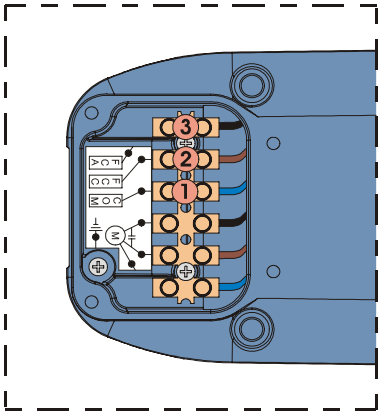

POS.	COLOUR	DESCRIPTION
1	Blue	Common cable
2	Brown	Closing limit switch (FCC)
3	Black	Opening limit switch (FCA)

Fig. 22

4.7.2. Adjusting the limit switches

The limit switch adjustment is carried out as follows:

1) Unscrew both lower screws of the front cap and remove the cover, Fig.23.

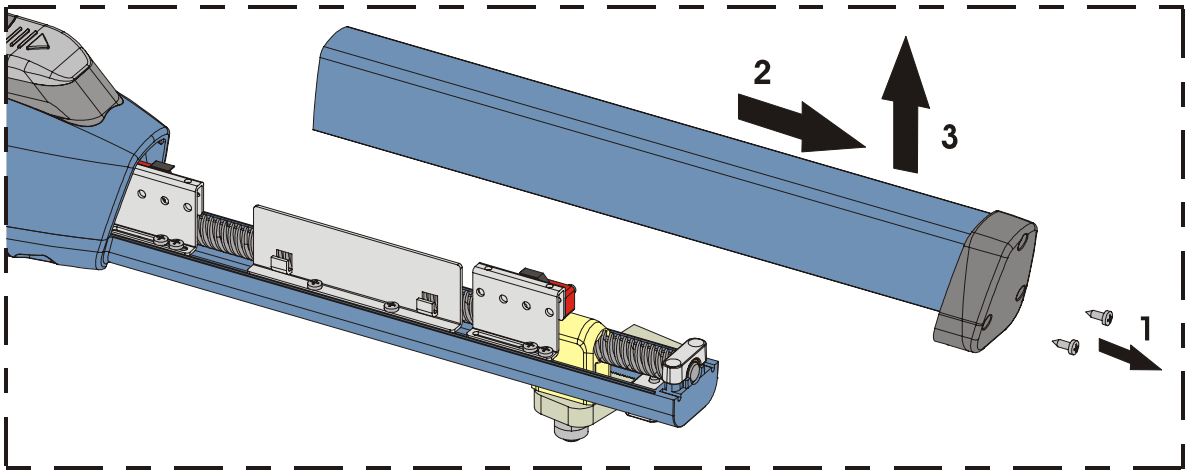

Fig. 23

2) Loosen the fastening screws of the limit switch to adjust, Fig.24 ref.A.
3) Move the limit switch to the desired position and lock the screws.
4) Perform a pair of test cycles to check the correct position of the limit switch. If the adjustment of the limit switch needs to be carried out again, repeat the operation starting from point 2.

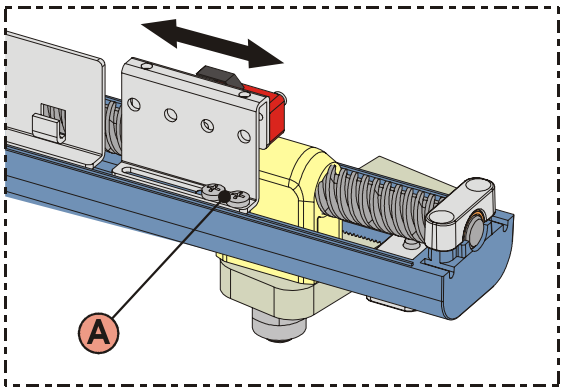

Fig. 24

5) Position again the cover by sliding it on the lower casting and make sure that it reaches the stop, Fig.25.
6) Screw both lower screws, Fig.25.

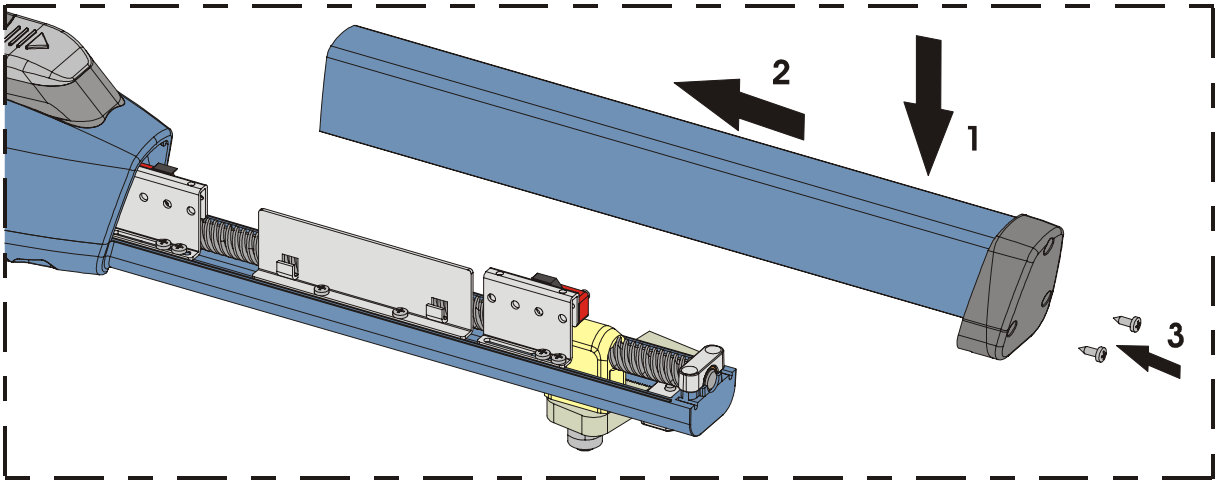

Fig. 25

4.8. Start-up

ATTENTION: Cut power before any job on the system or on the operator.
Carefully observe points 10, 11, 12, 13 and 14 of the SAFETY GENERAL RULES.
With reference to the indications in Fig.3, set the ducts and carry out the electrical connections of the control board and of the chosen accessories.
Always separate power cables from control and safety cables (push button, receiver, photocells, etc.). To avoid any electrical noise whatever in the unit, use separate sheaths.
1) Power up the system and check the LED condition as shown in the table of the control board instructions.
2) Program the control board according to the needs by following the given instructions.

5. TESTING THE AUTOMATED SYSTEM

- Carefully check operating efficiency of the automated system and of all accessories connected to it, paying special attention to the safety devices.
- Hand the "User's Guide" to the final user together with the Maintenance sheet.
- Explain correct operation and use of the automated system to the user.
- Indicate the potentially dangerous areas of the automated system to the user.

6. MANUAL OPERATION

If the automated system needs to be moved manually due to a power lack or to an operator malfunction, proceed as follows:
1) Cut power by means of the safety circuit breaker (even in the event of a power lack).
2) Slide the protective cap, Fig.26/1.
3) Insert the key and turn it 90°, Fig.26/2.
4) Lift the control lever, Fig.26/3.
5) To release the operator turn 180° the control lever to the direction indicated by the arrow on the release system, Fig.26/4.
6) Open and close the leaf manually.

Note: To hold the operator in manual operation the release device should be left in its current positions and the system should be without power.

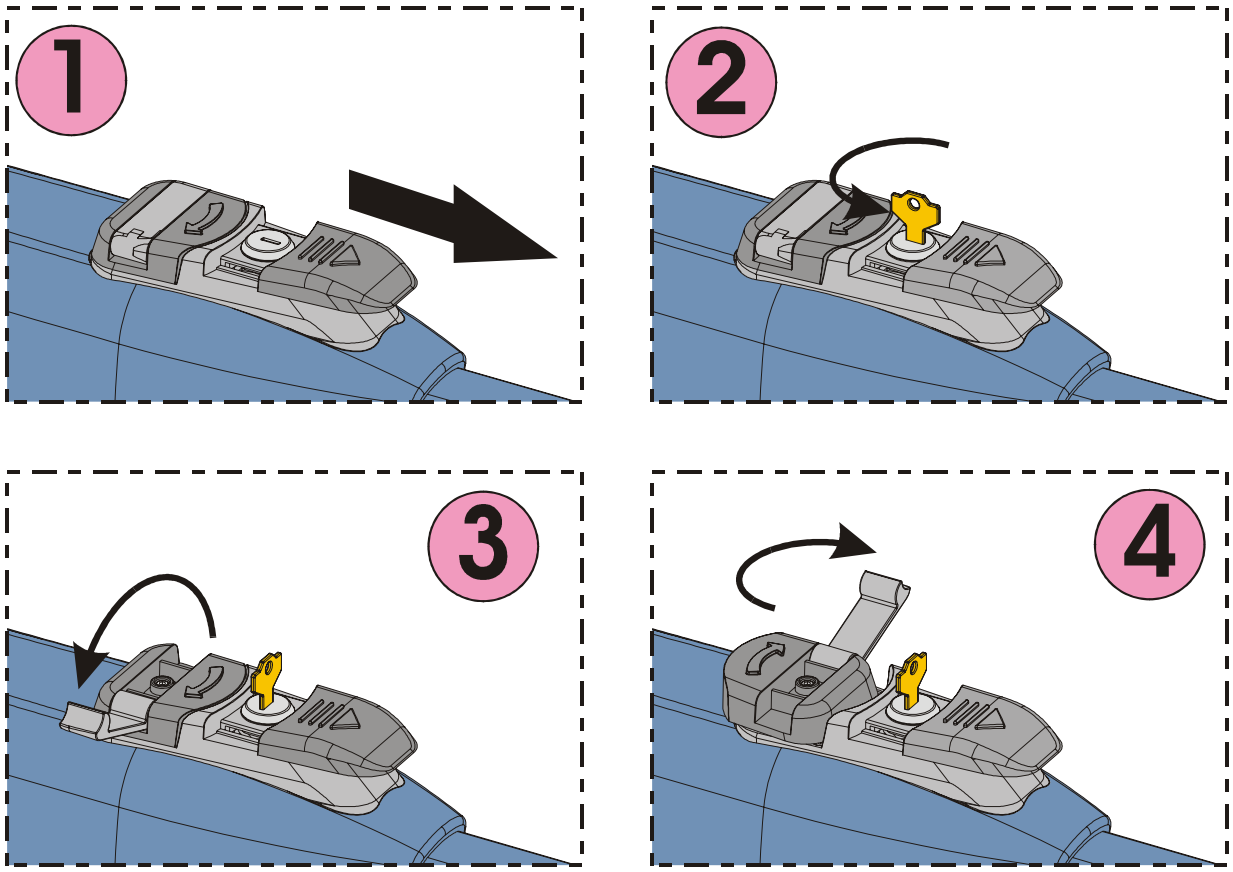

Fig. 26

6.1. Restoring normal operation

To restore normal operating conditions, proceed as follows:
1) Turn the release system 180° in the opposite direction of the arrow.
2) Turn 90° the release key and remove it.
3) Close the control lever and the protection cover.
4) Power up the system and perform some movements in order to check the correct restoring of every function of the automated system.

7. MAINTENANCE

To censure trouble-free operation and a constant safety level, an overall check of the system should be carried out every 6 months. A form for recording operations has been included in the "User's Guide" booklet.

8. REPAIRS

For any repairs, contact the authorised Repair Centres.

9. AVAILABLE ACCESSORIES

Refer to catalogue for available accessories.

10. SPECIAL APPLICATIONS

There is no special application other than the described use.

ADVERTENCIAS PARA EL INSTALADOR

REGLAS GENERALES PARA LA SEGURIDAD

1) **¡ATENCION! Es sumamente importante para la seguridad de las personas seguir atentamente las presentes instrucciones. Una instalación incorrecta o un uso impropio del producto puede causar graves daños a las personas.**
2) Lean detenidamente las instrucciones antes de instalar el producto.
3) Los materiales del embalaje (plástico, poliestireno, etc.) no deben dejarse al alcance de los niños, ya que constituyen fuentes potenciales de peligro.
4) Guarden las instrucciones para futuras consultas.
5) Este producto ha sido proyectado y fabricado exclusivamente para la utilización indicada en el presente manual. Cualquier uso diverso del previsto podría perjudicar el funcionamiento del producto y/o representar fuente de peligro.
6) GENIUS declina cualquier responsabilidad derivada de un uso impropio o diverso del previsto.
7) No instalen el aparato en atmósfera explosiva: la presencia de gas o humos inflamables constituye un grave peligro para la seguridad.
8) Los elementos constructivos mecánicos deben estar de acuerdo con lo establecido en las Normas EN 12604 y EN 12605.
   Para los países no pertenecientes a la CEE, además de las referencias normativas nacionales, para obtener un nivel de seguridad adecuado, deben seguirse las Normas arriba indicadas.
9) GENIUS no es responsable del incumplimiento de las buenas técnicas de fabricación de los cierres que se han de motorizar, así como de las deformaciones que pudieran intervenir en la utilización.
10) La instalación debe ser realizada de conformidad con las Normas EN 12453 y EN 12445. El nivel de seguridad de la automación debe ser C+D.
11) Quiten la alimentación eléctrica y desconecten las baterías antes de efectuar cualquier intervención en la instalación.
12) Coloquen en la red de alimentación de la automación un interruptor omnipolar con distancia de apertura de los contactos igual o superior a 3 mm. Se aconseja usar un magnetotérmico de 6A con interrupción omnipolar.
13) Comprueben que la instalación disponga línea arriba de un interruptor diferencial con umbral de 0,03 A.
14) Verifiquen que la instalación de tierra esté correctamente realizada y conecten las partes metálicas del cierre.
15) La automación dispone de un dispositivo de seguridad antiaplastamiento constituido por un control de par. No obstante, es necesario comprobar el umbral de intervención según lo previsto en las Normas indicadas en el punto 10.
16) Los dispositivos de seguridad (norma EN 12978) permiten proteger posibles áreas de peligro de **Riesgos mecánicos de movimiento**, como por ej. aplastamiento, arrastre, corte.
17) Para cada equipo se aconseja usar por lo menos una señalización luminosa así como un cartel de señalización adecuadamente fijado a la estructura del bastidor, además de los dispositivos indicados en el "16".
18) GENIUS declina toda responsabilidad relativa a la seguridad y al buen funcionamiento de la automación si se utilizan componentes de la instalación que no sean de producción GENIUS.
19) Para el mantenimiento utilicen exclusivamente piezas originales GENIUS
20) No efectúen ninguna modificación en los componentes que forman parte del sistema de automación.
21) El instalador debe proporcionar todas las informaciones relativas al funcionamiento del sistema en caso de emergencia y entregar al usuario del equipo el manual de advertencias que se adjunta al producto.
22) No permitan que niños o personas se detengan en proximidad del producto durante su funcionamiento.
23) Mantengan lejos del alcance los niños los telemandos o cualquier otro emisor de impulso, para evitar que la automación pueda ser accionada involuntariamente.
24) Sólo puede transitarse entre las hojas si la cancela está completamente abierta.
25) El usuario no debe por ningún motivo intentar reparar o modificar el producto, debe siempre dirigirse a personal cualificado.
26) **Todo lo que no esté previsto expresamente en las presentes instrucciones debe entenderse como no permitido**

HINWEISE FÜR DEN INSTALLATIONSTECHNIKER

ALLGEMEINE SICHERHEITSVORSCHRIFTEN

1) **ACHTUNG! Um die Sicherheit von Personen zu gewährleisten, sollte die Anleitung aufmerksam befolgt werden. Eine falsche Installation oder ein fehlerhafter Betrieb des Produktes können zu schwerwiegenden Personenschäden führen.**
2) Bevor mit der Installation des Produktes begonnen wird, sollten die Anleitungen aufmerksam gelesen werden.
3) Das Verpackungsmaterial (Kunststoff, Styropor, usw.) sollte nicht in Reichweite von Kindern aufbewahrt werden, da es eine potentielle Gefahrenquelle darstellt.
4) Die Anleitung sollte aufbewahrt werden, um auch in Zukunft Bezug auf sie nehmen zu können.
5) Dieses Produkt wurde ausschließlich für den in diesen Unterlagen angegebenen Gebrauch entwickelt und hergestellt. Jeder andere Gebrauch, der nicht ausdrücklich angegeben ist, könnte die Unversehrtheit des Produktes beeinträchtigen und/oder eine Gefahrenquelle darstellen.
6) Die Firma GENIUS lehnt jede Haftung für Schäden, die durch unsachgemäßen oder nicht bestimmungsgemäßen Gebrauch der Automatik verursacht werden, ab.
7) Das Gerät sollte nicht in explosionsgefährdeten Umgebungen installiert werden: das Vorhandensein von entflammbaren Gasen oder Rauch stellt ein schwerwiegendes Sicherheitsrisiko dar.
8) Die mechanischen Bauelemente müssen den Anforderungen der Normen EN 12604 und EN 12605 entsprechen.
   Für Länder, die nicht der Europäischen Union angehören, sind für die Gewährleistung eines entsprechenden Sicherheitsniveaus neben den nationalen gesetzlichen Bezugsvorschriften die oben aufgeführten Normen zu beachten.
9) Die Firma GENIUS übernimmt keine Haftung im Falle von nicht fachgerechten Ausführungen bei der Herstellung der anzutreibenden Schließvorrichtungen sowie bei Deformationen, die eventuell beim Betrieb entstehen.
10) Die Installation muß unter Beachtung der Normen EN 12453 und EN 12445 erfolgen. Die Sicherheitsstufe der Automatik sollte C+D sein.
11) Vor der Ausführung jeglicher Eingriffe auf der Anlage sind die elektrische Versorgung und die Batterie abzunehmen.
12) Auf dem Versorgungsnetz der Automatik ist ein omnipolarer Schalter mit Öffnungsabstand der Kontakte von über oder gleich 3 mm einzubauen. Darüber hinaus wird der Einsatz eines Magnetschutzschalters mit 6A mit omnipolarer Abschaltung empfohlen.
13) Es sollte überprüft werden, ob vor der Anlage ein Differentialschalter mit einer Auslöseschwelle von 0,03 A zwischengeschaltet ist.
14) Es sollte überprüft werden, ob die Erdungsanlage fachgerecht ausgeführt wurde. Die Metallteile der Schließung sollten an diese Anlage angeschlossen werden.
15) Die Automation verfügt über eine eingebaute Sicherheitsvorrichtung für den Quetschschutz, die aus einer Drehmomentkontrolle besteht. Es ist in jedem Falle erforderlich, deren Eingriffsschwelle gemäß der Vorgaben der unter Punkt 10 angegebenen Vorschriften zu überprüfen.
16) Die Sicherheitsvorrichtungen (Norm EN 12978) ermöglichen den Schutz eventueller Gefahrenbereiche vor **mechanischen Bewegungsrisiken**, wie zum Beispiel Quetschungen, Mitschleifen oder Schnittverletzungen.
17) Für jede Anlage wird der Einsatz von mindestens einem Leuchtsignal empfohlen sowie eines Hinweisschildes, das über eine entsprechende Befestigung mit dem Aufbau des Tors verbunden wird. Darüber hinaus sind die unter Punkt "16" erwähnten Vorrichtungen einzusetzen.
18) Die Firma GENIUS lehnt jede Haftung hinsichtlich der Sicherheit und des störungsfreien Betriebs der Automatik ab, soweit Komponenten auf der Anlage eingesetzt werden, die nicht im Hause GENIUS hergestellt wurden.
19) Bei der Instandhaltung sollten ausschließlich Originalteile der Firma GENIUS verwendet werden.
20) Auf den Komponenten, die Teil des Automationssystems sind, sollten keine Veränderungen vorgenommen werden.
21) Der Installateur sollte alle Informationen hinsichtlich des manuellen Betriebs des Systems in Notfällen liefern und dem Betreiber der Anlage das Anleitungsbuch, das dem Produkt beigelegt ist, übergeben.
22) Weder Kinder noch Erwachsene sollten sich während des Betriebs in der unmittelbaren Nähe der Automation aufhalten.
23) Die Funksteuerungen und alle anderen Impulsgeber sollten außerhalb der Reichweite von Kindern aufbewahrt werden, um ein versehentliches Aktivieren der Automation zu vermeiden.
24) Der Durchgang oder die Durchfahrt zwischen den Flügeln darf lediglich bei vollständig geöffnetem Tor erfolgen.
25) Der Betreiber sollte keinerlei Reparaturen oder direkte Eingriffe auf der Automation ausführen, sondern sich hierfür ausschließlich an qualifiziertes Fachpersonal wenden.
26) **Alle Vorgehensweisen, die nicht ausdrücklich in der vorliegenden Anleitung vorgesehen sind, sind nicht zulässig**

WAARSCHUWINGEN VOOR DE INSTALLATEUR

ALGEMENE VEILIGHEIDSVOORSCHRIFTEN

1) **LET OP! Het is belangrijk voor de veiligheid dat deze hele instructie zorgvuldig wordt opgevolgd. Een onjuiste installatie of foutief gebruik van het product kunnen ernstig persoonlijk letsel veroorzaken.**
2) Lees de instructies aandachtig door alvorens te beginnen met de installatie van het product.
3) De verpakkingsmaterialen (plastic, polystyreen, enz.) mogen niet binnen het bereik van kinderen worden gelaten, want zij vormen een mogelijke bron van gevaar.
4) Bewaar de instructies voor raadpleging in de toekomst.
5) Dit product is uitsluitend ontworpen en gebouwd voor het doel dat in deze documentatie wordt aangegeven. Elk ander gebruik, dat niet uitdrukkelijk wordt vermeld, zou het product kunnen beschadigen en/of een bron van gevaar kunnen vormen.
6) GENIUS aanvaardt geen enkele aansprakelijkheid voor schade die ontstaat uit oneigenlijk gebruik of ander gebruik dan waarvoor het automatische systeem is bedoeld.
7) Installeer het apparaat niet in een explosiegevaarlijke omgeving: de aanwezigheid van ontvlambare gassen of dampen vormt een ernstig gevaar voor de veiligheid.
8) De mechanische bouwelementen moeten in overeenstemming zijn met de bepalingen van de normen EN 12604 en EN 12605.
   Voor niet-EEG landen moeten, om een goed veiligheidsniveau te bereiken, behalve de nationale voorschriften ook de bovenstaande normen in acht worden genomen.
9) GENIUS is niet aansprakelijk als de regels der goede techniek niet in acht genomen zijn bij de bouw van het sluitwerk dat gemotoriseerd moet worden, noch voor vervormingen die zouden kunnen ontstaan bij het gebruik.
10) De installatie dient te geschieden in overeenstemming met de normen EN 12453 en EN 12445.
    Het veiligheidsniveau van het automatische systeem moet C+D zijn.
11) Alvorens ingrepen te gaan verrichten op de installatie moet de elektrische voeding worden weggenomen en moeten de batterijen worden afgekoppeld.
12) Zorg op het voedingsnet van het automatische systeem voor een meerpolige schakelaar met een opening tussen de contacten van 3 mm of meer. Het wordt geadviseerd een magnetothermische schakelaar van 6A te gebruiken met meerpolige onderbreking.
13) Controleer of er bovenstrooms van de installatie een differentieelschakelaar is geplaatst met een limiet van 0,03 A.
14) Controleer of de aardingsinstallatie vakkundig is aangelegd en sluit er de metalen delen van het sluitsysteem op aan.
15) Het automatische systeem beschikt over een intrinsieke beveiliging tegen inklemming, bestaande uit een controle van het koppel. De inschakellimiet hiervan dient echter te worden gecontroleerd volgens de bepalingen van de normen die worden vermeld onder punt 10.
16) De veiligheidsvoorzieningen (norm EN 12978) maken het mogelijk eventuele gevaarlijke gebieden te beschermen tegen **Mechanische gevaren door beweging**, zoals bijvoorbeeld inklemming, meesleuren of amputatie.
17) Het wordt voor elke installatie geadviseerd minstens één lichtsignaal te gebruiken alsook een waarschuwingsbord dat goed op de constructie van het hang- en sluitwerk dient te worden bevestigd, afgezien nog van de voorzieningen die genoemd zijn onder punt "16".
18) GENIUS aanvaardt geen enkele aansprakelijkheid voor wat betreft de veiligheid en de goede werking van het automatische systeem, als er in de installatie gebruik gemaakt wordt van componenten die niet door GENIUS zijn geproduceerd.
19) Gebruik voor het onderhoud uitsluitend originele GENIUS-onderdelen.
20) Verricht geen wijzigingen op componenten die deel uitmaken van het automatische systeem.
21) De installateur dient alle informatie te verstrekken over de handbediening van het systeem in noodgevallen, en moet de gebruiker van de installatie het bij het product geleverde boekje met aanwijzingen overhandigen.
22) Sta het niet toe dat kinderen of volwassenen zich ophouden in de buurt van het product terwijl dit in werking is.
23) Houd radio-afstandsbedieningen of alle andere impulsgevers buiten het bereik van kinderen, om te voorkomen dat het automatische systeem onopzettelijk kan worden aangedreven.
24) Ga alleen tussen de vleugels door als het hek helemaal geopend is.
25) De gebruiker mag geen pogingen tot reparatie doen of directe ingrepen plegen, en dient zich uitsluitend te wenden tot gekwalificeerd personeel.
26) **Alles wat niet uitdrukkelijk in deze instructies wordt aangegeven, is niet toegestaan**

Le descrizioni e le illustrazioni del presente manuale non sono impegnative. GENIUS si riserva il diritto, lasciando inalterate le caratteristiche essenziali dell'apparecchiatura, di apportare in qualunque momento e senza impegnarsi ad aggiornare la presente pubblicazione, le modifiche che essa ritiene convenienti per miglioramenti tecnici o per qualsiasi altra esigenza di carattere costruttivo o commerciale.

The descriptions and illustrations contained in the present manual are not binding. GENIUS reserves the right, whils leaving the main features of the equipments unaltered, to undertake any modifications to holds necessary for either technical or commercial reasons, at any time and without revising the present publication.

Les descriptions et les illustrations du présent manuel sont fournies à titre indicatif. GENIUS se réserve le droit d'apporter à tout moment les modifications qu'elle jugera utiles sur ce produit tout en conservant les caractéristiques essentielles, sans devoir pour autant mettre à jour cette publication .

Las descripciones y las ilustraciones de este manual no comportan compromiso alguno. GENIUS se reserva el derecho, dejando inmutadas las características esenciales de los aparatos, de aportar, en cualquier momento y sin comprometerse a poner al día la presente publicación, todas las modificaciones que considere oportunas para el perfeccionamiento técnico o para cualquier otro tipo de exigencia de carácter constructivo o comercial.

Die Beschreibungen und Abbildungen in vorliegendem Handbuch sind unverbindlich. GENIUS behält sich das Recht vor, ohne die wesentlichen Eigenschaften dieses Gerätes zu verändern und ohne Verbindlichkeiten in Bezung auf die Neufassung der vorliegenden Anleitungen, technisch bzw, konstruktiv / kommerziell bedingte Verbesserungen vorzunehmen.

De beschrijvingen in deze handleiding zijn niet bindend. GENIUS behoudt zich het recht voor op elk willekeurig moment de veranderingen aan te brengen die het bedrijf nuttig acht met het oog op technische verbeteringen of alle mogelijke andere productie- of commerciële eisen, waarbij de fundamentele eigenschappen van het apparaat gehandhaafd blijven, zonder zich daardoor te verplichten deze publicatie bij te werken.

Timbro rivenditore: / Distributor's stamp: / Timbre de l'agent: /
Sello del revendedor: / Fachhändlerstempel: / Stempel dealer:

GENIUS S.p.a.
Via Padre Elzi, 32
24050 - Grassobbio
BERGAMO-ITALY
tel. 0039.035.4242511
fax. 0039.035.4242600
info@geniusg.com
www.geniusg.com

I0424 Rev.2