DRIVE 700

Underground oil-hydraulic automation with separate motor-pump assembly for swinging gates

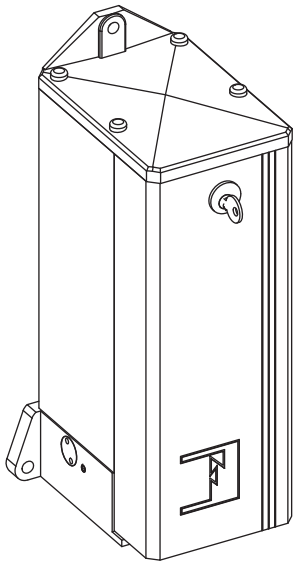

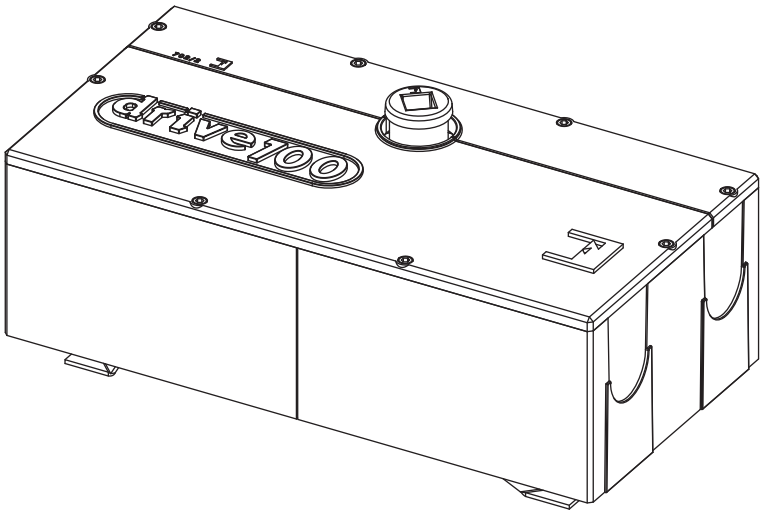

CE

EN 13241
EN 12453
EN 12445

Made in Italy

FADINI
the gate opener

English

GENERAL WARNINGS FOR PEOPLE SAFETY

THANK YOU

Thank you for purchasing a Fadini product.
Please read these instructions carefully before using this appliance. The instructions contain important information which will help you get the best out of the appliance and ensure safe and proper installation, use and maintenance. Keep this manual in a convenient place so that you can always refer to it for the safe and proper use of the appliance.

INTRODUCTION

This operator is designed for a specific scope of applications as indicated in this manual, including safety, control and signaling accessories as minimum required with Fadini equipment. □ Any applications not explicitly included in this manual may cause operation problems or damages to properties and people. □ Meccanica Fadini snc is not liable for damages caused by the incorrect use of the equipment, or for applications not included in this manual or for malfunctioning resulting from the use of materials or accessories not recommended by the manufacturer. □ The manufacturer reserves the right to make changes to its products without prior notice. □ All that is not explicitly indicated in this manual is to be considered not allowed.

BEFORE INSTALLATION

Before commencing operator installation assess the suitability of the access, its general condition and the structure. □ Make sure that there is no risk of impact, crushing, shearing, conveying, cutting, entangling and lifting situations, which may prejudice people safety. □ Do not install near any source of heat and avoid contacts with flammable substances. □ Keep all the accessories able to turn on the operator (transmitters, proximity readers, key-switches, etc) out of the reach of the children. □ Transit through the access only with stationary operator. □ Do not allow children and/or people to stand in the proximity of a working operator. □ To ensure safety in the whole movement area of a gate it is advisable to install photocells, sensitive edges, magnetic loops and detectors. □ Use yellow-black strips or proper signals to identify dangerous spots. □ Before cleaning and maintenance operations, disconnect the appliance from the mains by switching off the master switch. □ If removing the actuator, do not cut the electric wires, but disconnect them from the terminal box by loosening the screws inside the junction box.

INSTALLATION

All installation operations must be performed by a qualified technician, in observance of the Machinery Directive 2006/42/CE and safety regulations EN 12453 - EN 12445. □ Verify the presence of a thermal-magnetic circuit breaker 0,03 A - 230 V - 50 Hz upstream the installation. □ Use appropriate objects to test the correct functionality of the safety accessories, such as photocells, sensitive edges, etc. □ Carry out a risk analysis by means of appropriate instruments measuring the crushing and impact force of the main opening and closing edge in compliance with EN 12445. □ Identify the appropriate solution necessary to eliminate and reduce such risks.

□ In case where the gate to automate is equipped with a pedestrian entrance, it is appropriate to prepare the system in such a way to prohibit the operation of the engine when the pedestrian entrance is used. □ Apply safety nameplates with CE marking on the gate warning about the presence of an automated installation. □ The installer must inform and instruct the end user about the proper use of the system by releasing him a technical dossier, including: layout and components of the installation, risk analysis, verification of safety accessories, verification of impact forces and reporting of residual risks.

INFORMATION FOR END-USERS

The end-user is required to read carefully and to receive information concerning only the operation of the installation so that he becomes himself responsible for the correct use of it. □ The end-user shall establish a written maintenance contract with the installer/maintenance technician (on -call). □ Any maintenance operation must be done by qualified technicians. □ Keep these instructions carefully.

WARNINGS FOR THE CORRECT OPERATION OF THE INSTALLATION

For optimum performance of system over time according to safety regulations, it is necessary to perform proper maintenance and monitoring of the entire installation: the automation, the electronic equipment and the cables connected to these. □ The entire installation must be carried out by qualified technical personnel, filling in the Maintenance Manual indicated in the Safety Regulation Book (to be requested or downloaded from the site www.fadini.net/supporto/downloads).
□ Operator: maintenance inspection at least every 6 months, while for the electronic equipment and safety systems an inspection at least once every month is required. □ The manufacturer, Meccanica Fadini snc, is not responsible for non-observance of good installation practice and incorrect maintenance of the installation.

DISPOSAL OF MATERIALS

Dispose properly of the packaging materials such as cardboard, nylon, polystyrene etc. through specializing companies (after verification of the regulations in force at the place of installation in the field of waste disposal). Disposal of electrical and electronic materials: to remove and dispose through specializing companies, as per Directive 2012/19/UE. Disposal of substances hazardous for the environment is prohibited.



CE DECLARATION OF CONFORMITY of the manufacturer:
Meccanica Fadini snc (Via Mantova, 177/A - 37053 Cerea - VR - Italy) declares under own responsibility that: **DRIVE 700** complies with the 2006/42/CE Machinery Directive, and also that it is sold to be installed in an "automatic system", along with original accessories and components as indicated by the manufacturing company. An automatic gate operator is, by law, a "machinery" and therefore the installer must fit the equipment with all of the applicable safety norms. The installer is also required to issue the installer's Declaration of Conformity. The manufacturer is not liable for possible incorrect use of the product. The product complies with the following specific norms: analysis of the risks and subsequent action to cure them as per EN 12445 and EN 12453, Low Voltage Directive 2014/35/UE, Electromagnetic Compatibility 2014/30/UE. In order to certify the product, the manufacturer declares under own responsibility the compliance with the EN 13241-1 PRODUCT NORMS.

Meccanica Fadini s.n.c.
Director in charge

English

GENERAL DESCRIPTION OF THE PRODUCT

Drive 700 is an oil-hydraulic operator for external application, designed to open and close residential swinging gates. It consists of an underground, oil-hydraulic component, the jack, housed in a pressure-cast aluminium foundation box, and an external motor-pump unit Drive 700 Estru which is connected to the jack by copper tubes.
The jack is available in various options either 110° or 175° degrees of rotation, with or without hydraulic braking device.
Drive 700 Estru motor-pump is also available in various options, either fitted with bidirectional hydraulic locking device or reversible (an electric lock is to be fitted to the gate/s in case this option is mounted). Being an oil-hydraulic product, it has therefore all the advantages this kind of operators have, such as reliability, smooth movements and adjustable thrust power by pressure valves allowing control of the lowest to the highest values. These features make it suitable for any kind of gate up to a maximum weight of 700 kg. The shaft has a square design and is made of hardened steel to achieve the utmost in reliability and long life.

For Drive 700 to operate a gate system automatically, it is required that an electronic control board be connected to it and precisely Elpro 27. This can be installed externally, in a sheltered place and controls any possible operations either in automatic or semiautomatic modes according to the user's requirements.
A wide range of safety and command accessories complete the system making it thus suitable for any public or private applications. All most essential adjustments are possible, highest and lowest pressure setting by valves as well as overriding for manual operations.

COMPONENTS

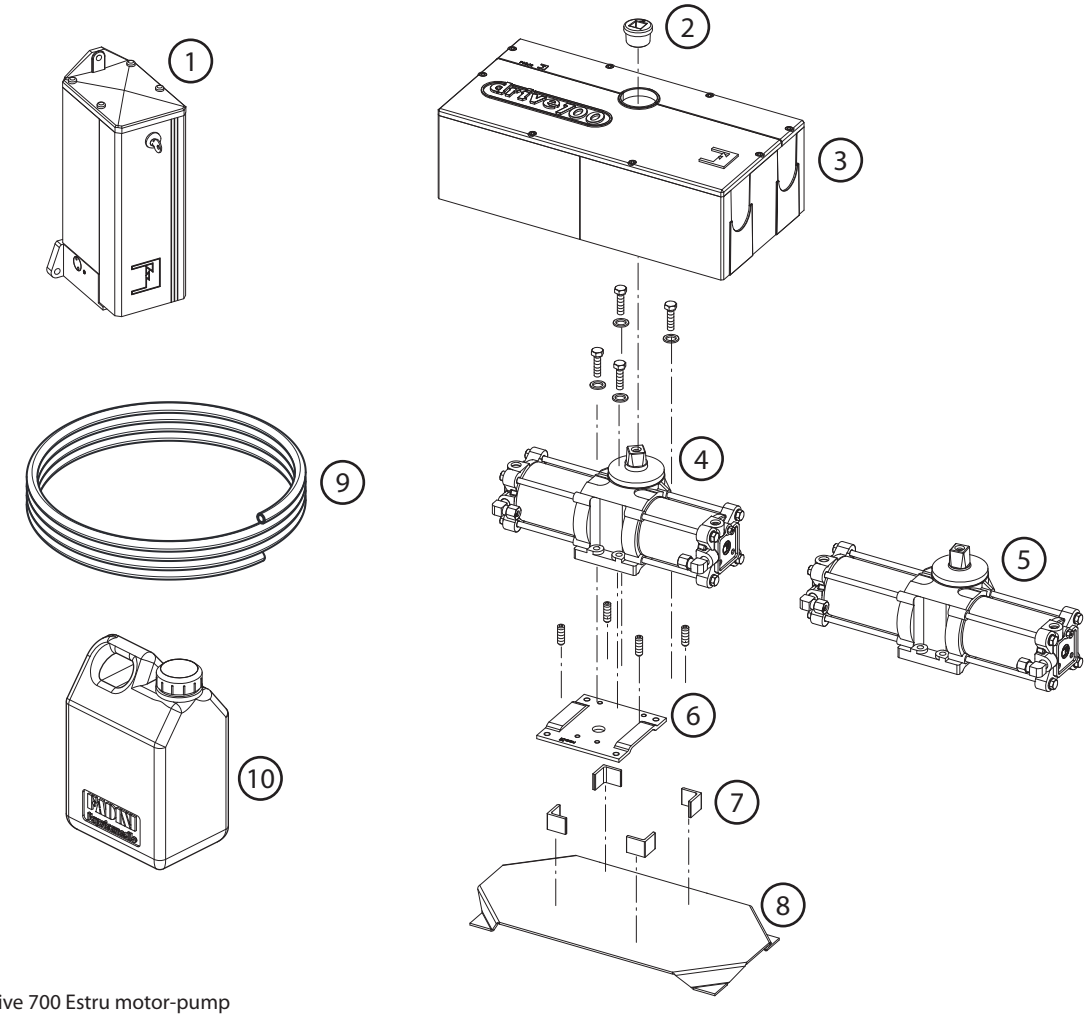

1 - Drive 700 Estru motor-pump
2 - Pressed steel f-ring with square hole
3 - Pressure cast aluminium foundation box
4 - Drive 700 jack 110° of rotation
5 - Drive 700 jack 175° of rotation
6 - Galvanized jack fixing plate
7 - Jack position angles
8 - Anchor base plate to cement
9 - Copper tube ø 8 (on request)
10 - Oil can x 2 l (on request)

Pic. 1

English

WIRING DIAGRAM AND ACCESSORIES

Indicative layout: it is the installer's responsibility to provide and lay the tubes for the electrical connections.

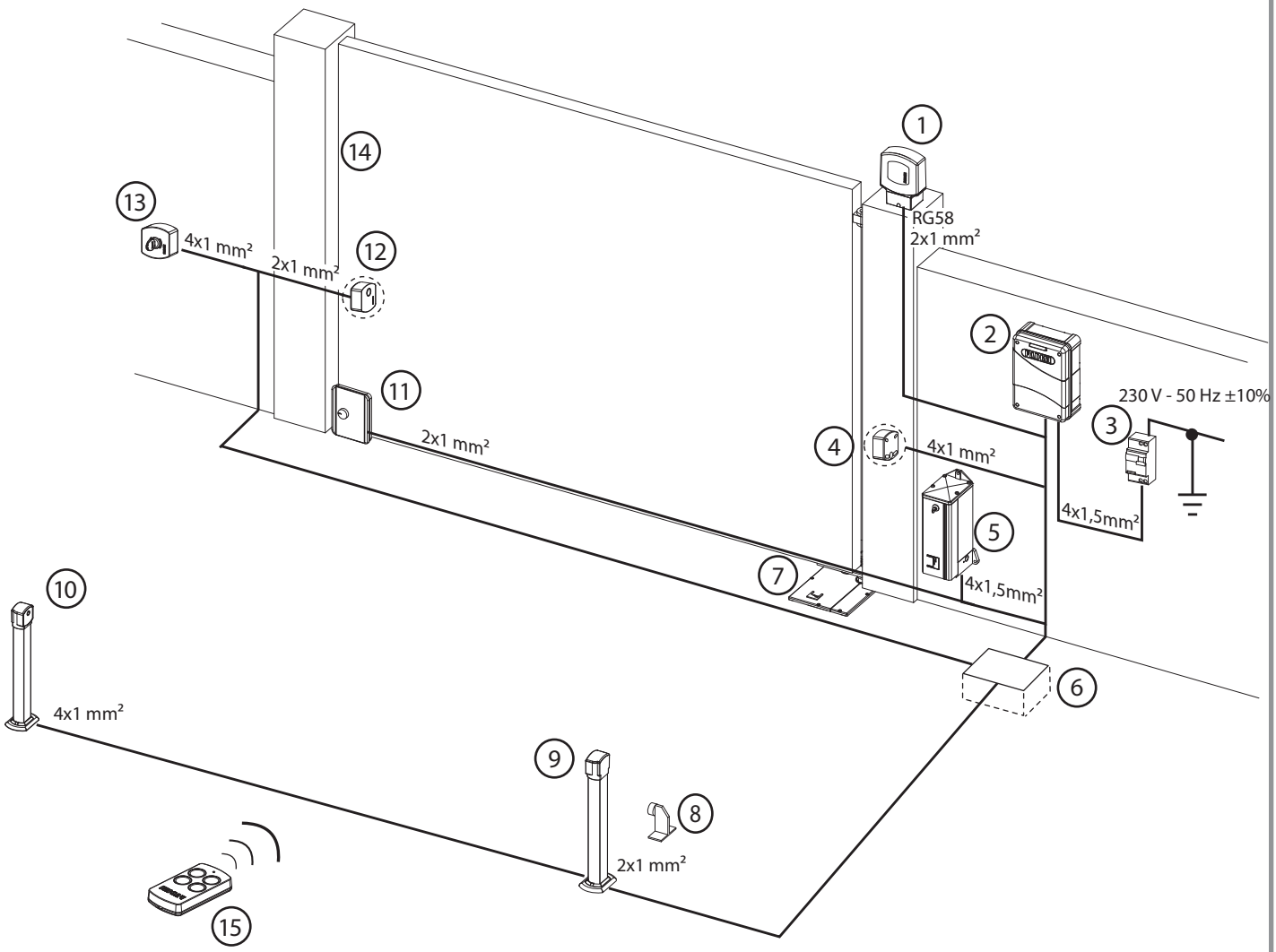

1 - Flasher
2 - Controller with plug-in receiver
3 - 230 V - 50 Hz 0,03 A magneto-thermal circuit breaker (recommended cable section 2,5 mm² beyond 100 m)
4 - Photocell receiver
5 - Motor-pump unit
6 - Cable junction pit
7 - Oil-hydraulic underground jack
8 - Ground gate stop
9 - Post with photocell transmitter
10 - Post with photocell receiver
11 - Electric lock (for Drive 700 Estru reversible motor-pump unit or in case of gate leaves wider than 2 meters)
12 - Photocell transmitter
13 - Keyswitch
14 - Gate stop in closed position
15 - Radio transmitter

IMPORTANT:
suitable stops in open and closed gate positions are most important for the correct functioning of the Drive 700 system.

Pic. 2

English

GATE PREPARATORY WORKS

It is required that the gate bottom hinge be removed, being replaced by the rotation shaft/pivot of Drive 700.

IMPORTANT:
the gate must be allowed to swing open and close perfectly leveled.

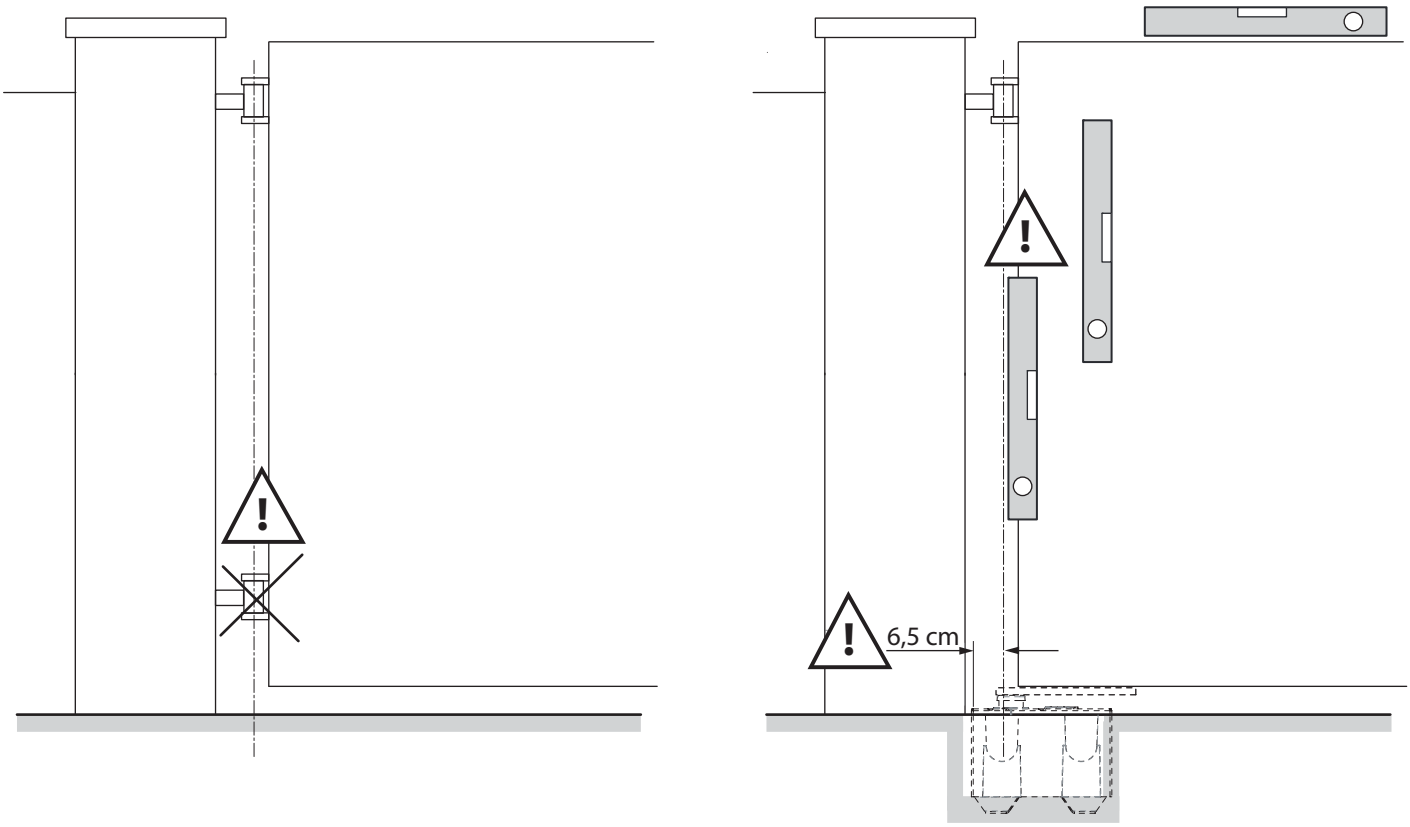

IMPORTANT: the position of the ground foundation box is in relation to the position of the upper hinge. The center of the hole in the foundation box (therefore the jack shaft center) and the center of the upper hinge are to be on the same line. Digging is to be carried out in consideration of this.

Pic. 3

DIGGING AND FIXING THE ANCHOR BASE PLATE

Dig a hole in the ground of the size as indicated below in Pic. 4 at the foot of the gate post to take the anchor base plate and fix it by concrete.

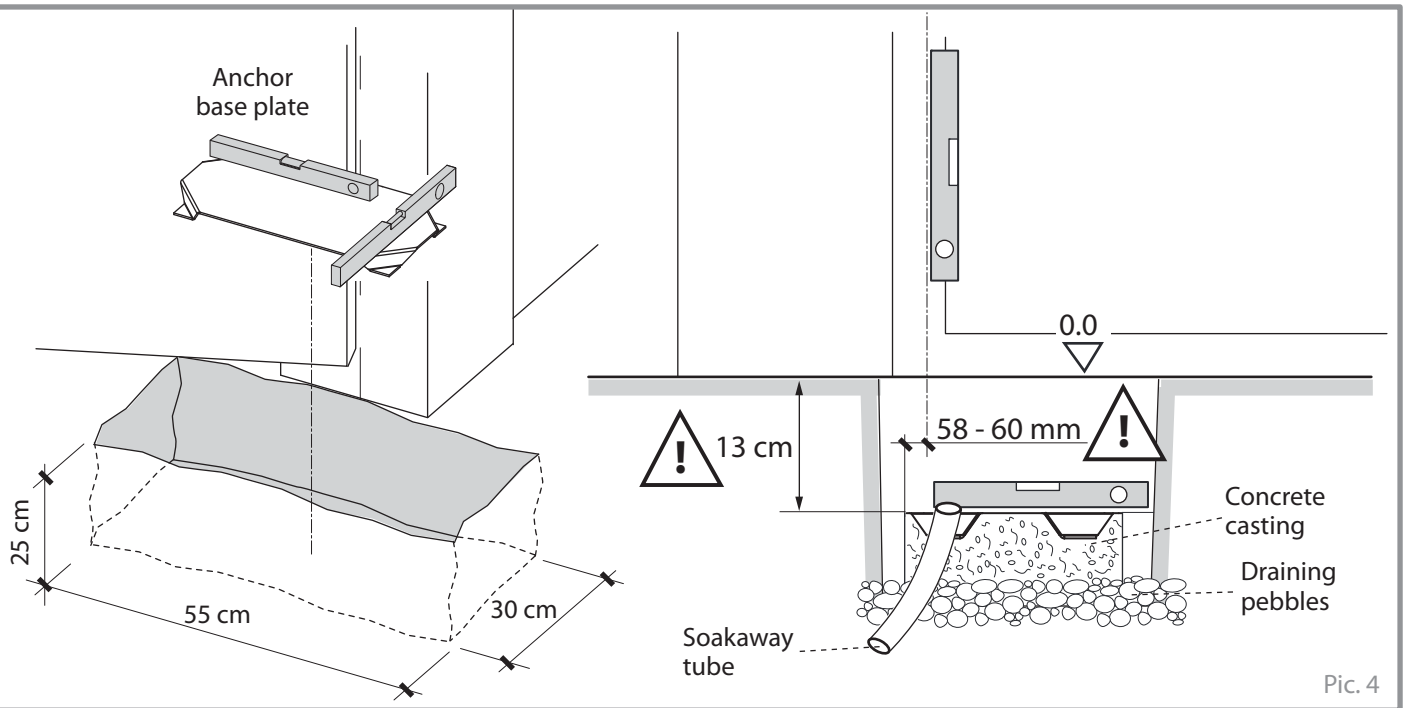

Pic. 4

English

Lay one or more connection tubes into the digging to the motor-pump Drive 700 Estru: it is advisable that the motor pump be installed as near as possible to the jack (fixing by expanding bolts) to facilitate the hydraulic connections.

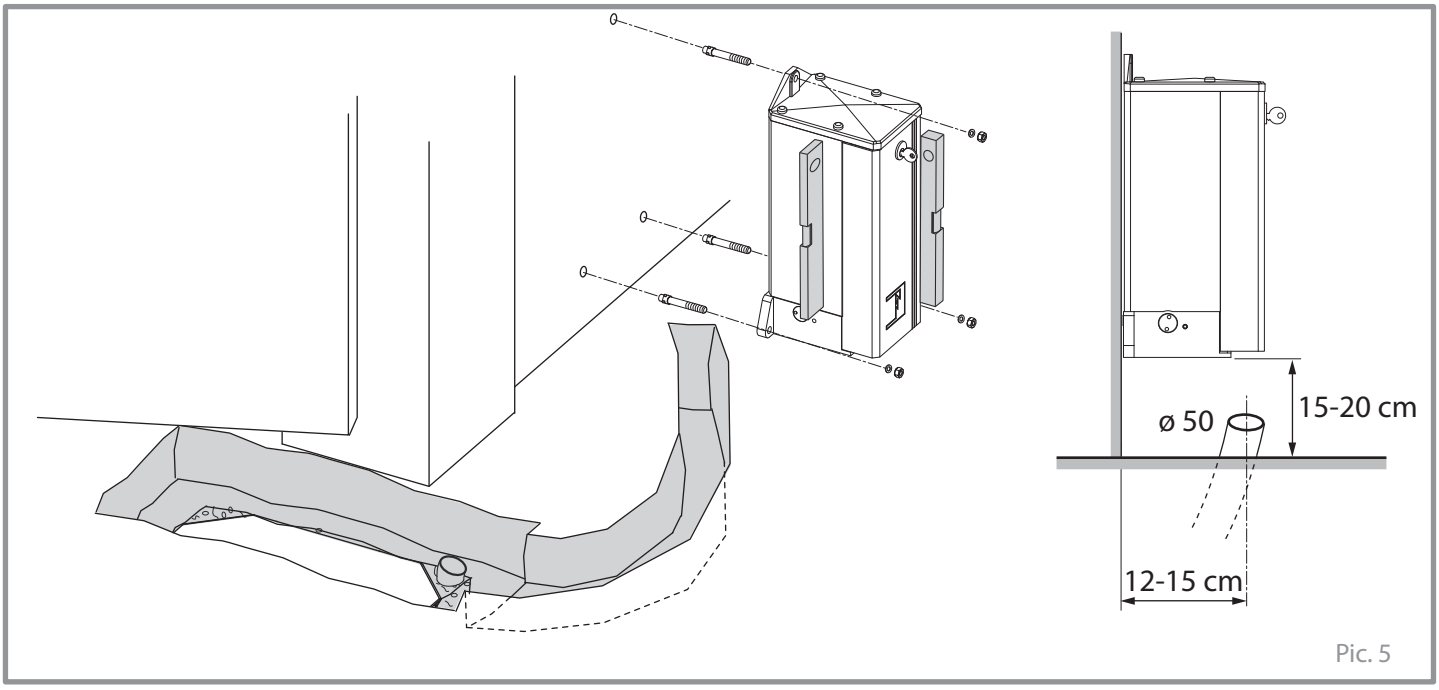

Pic. 5

Weld the 4 corner plates, supplied with the equipment, onto the anchoring plate to take the jack galvanized base, making sure that the jack be in the correct position for its center line to coincide with the upper hinge center line.

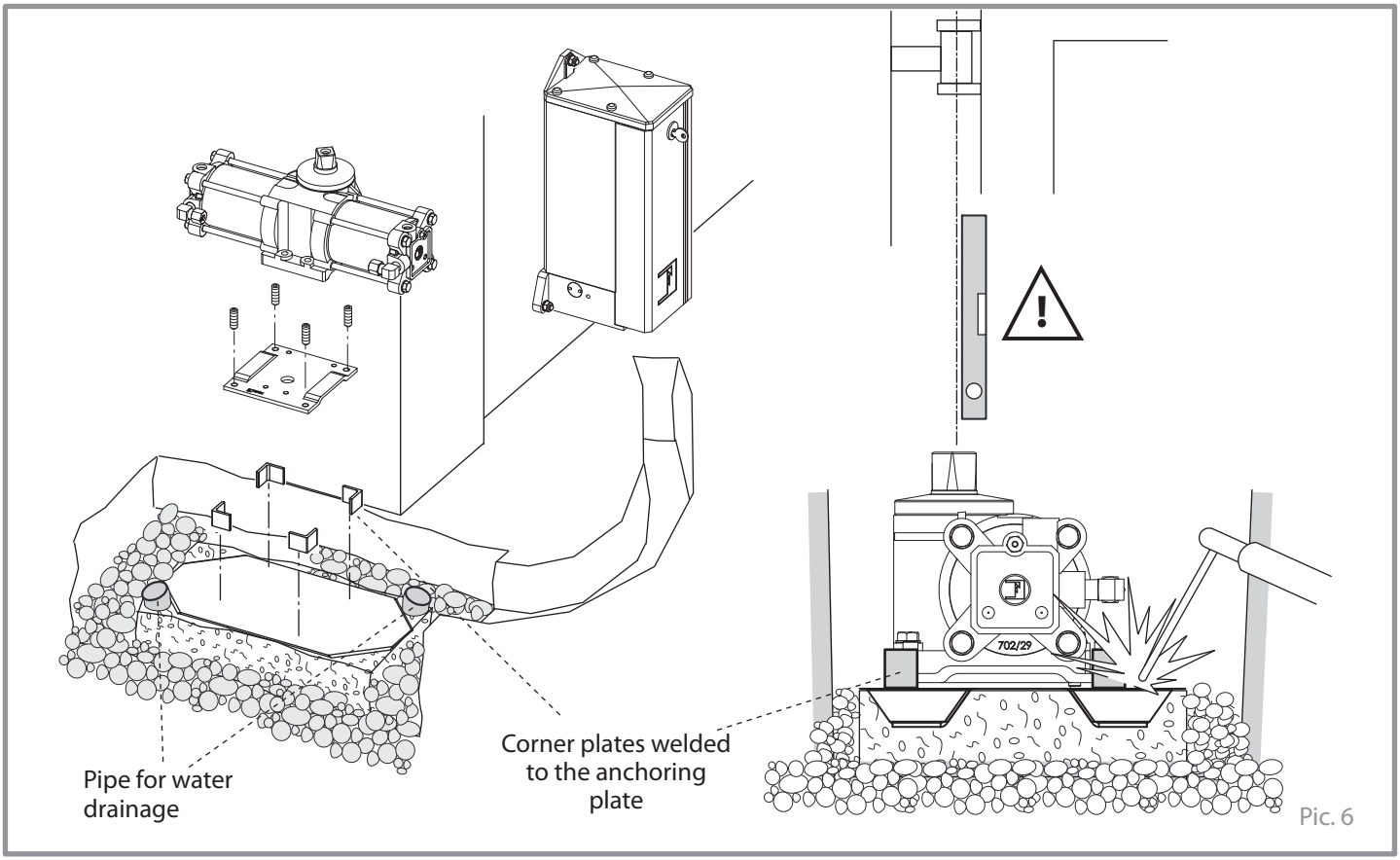

Pic. 6

English

CONNECTING GATE LEAF TO THE JACK AND SETTING INTO OPERATION

Once satisfied that corner fixing and jack positioning at the foot of the gate have been completed, next step to carry out is fixing the gate to the jack square shaft by means of the ferrule supplied with the equipment and a plate to weld (not included as it depends on gate type and thickness).

First operation: rotate the jack square shaft to the end of the permitted turning by a wrench (no effort is required in doing this as there isn't any oil yet inside at this stage).

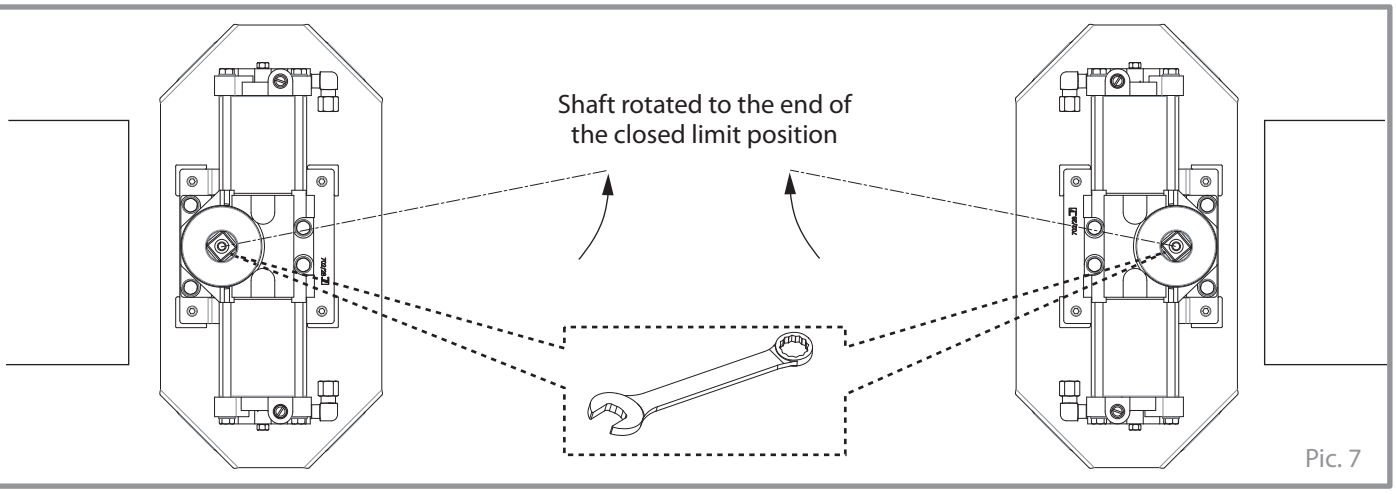

Pic. 7

IMPORTANT: for the gate to stay securely closed in position, once satisfied the previous step is carried out all right, rotate the shaft back by at least 5°.

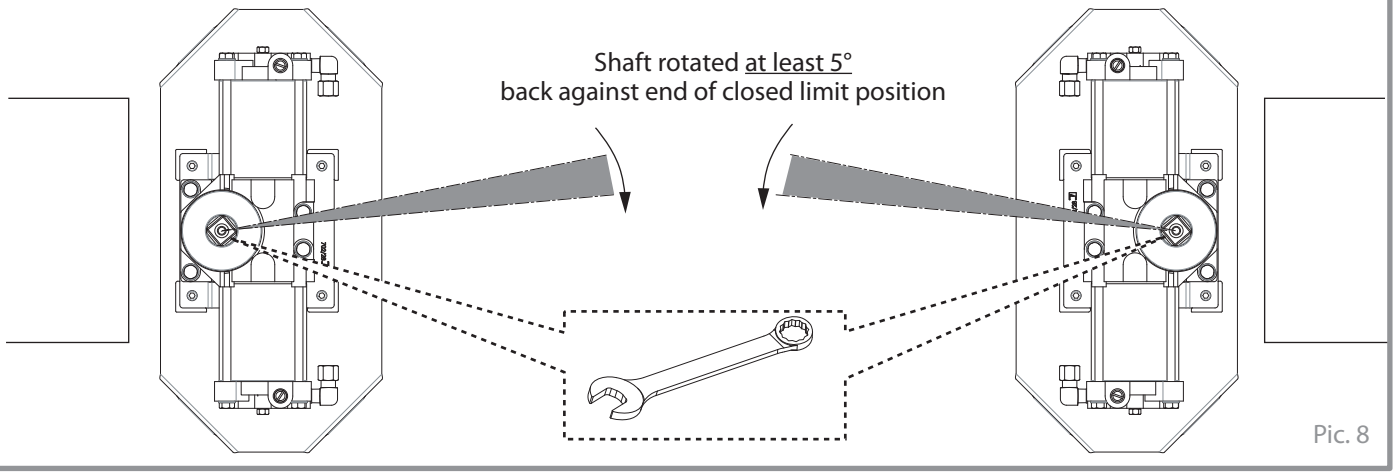

Pic. 8

Once satisfied the jack is leveled (by the adjusting screws in the galvanized base plate), fit the ferrule (F-ring) with square hole on to the jack shaft and then weld it to the reinforcement plate (not in the equipment), and this one to the gate foot.

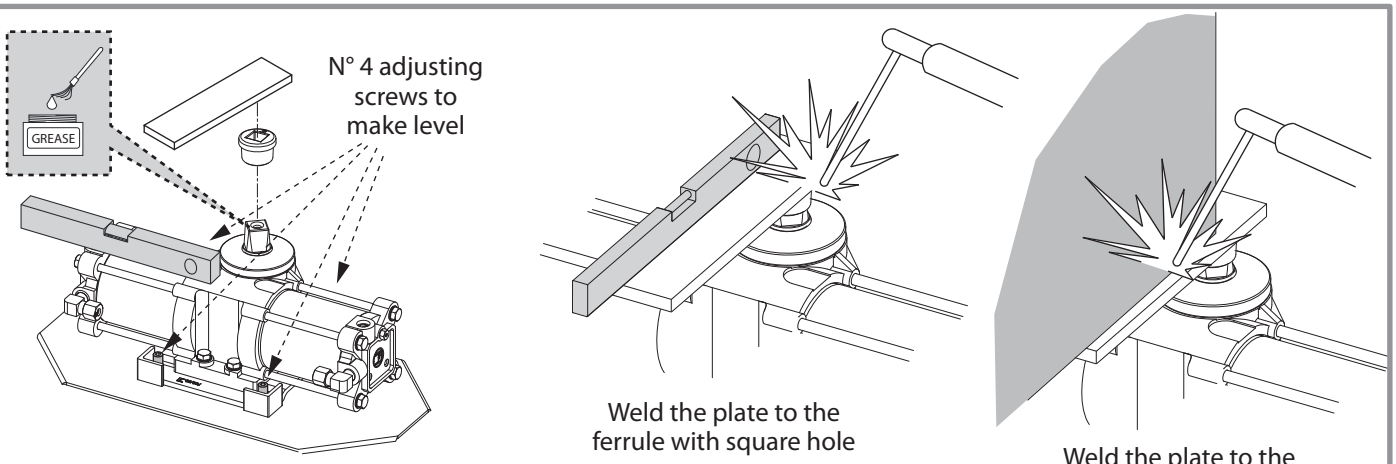

IMPORTANT: before final fixing can be carried out, it is advisable that a temporary set up be provided to allow trial open and close by hand.

Pic. 9

English

FIXING THE FOUNDATION BOX

First remove the screws and bring the foundation box fully apart to facilitate next step, that is opening the inlets provided in the casing for the ducts, one to lead oil pipes to Drive 700 Estru motor pump and a duct to drain fluids away.

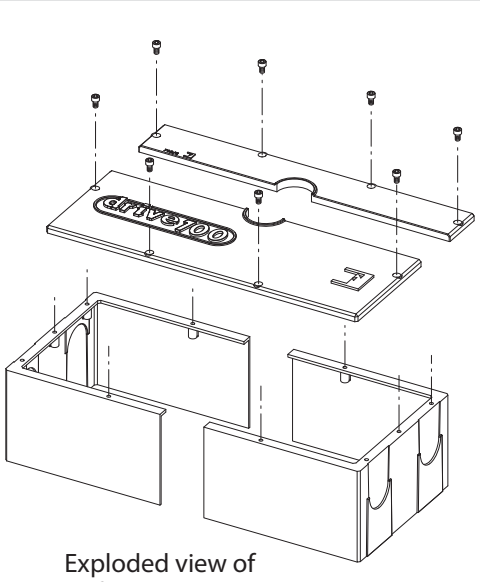

Exploded view of the foundation box

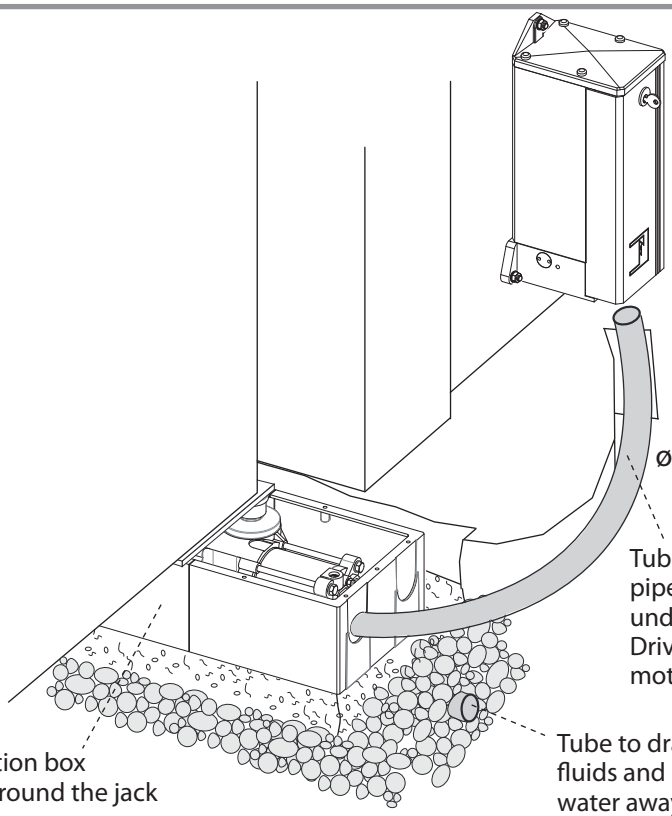

IMPORTANT: to prevent rain water from being stagnant inside the foundation box, a soakaway system is recommended by putting a layer of pebbles straight underneath or by a pipe bringing water away.

Pic. 10

Once all the required ducts have been laid, firmly set the aluminium foundation box by concrete.

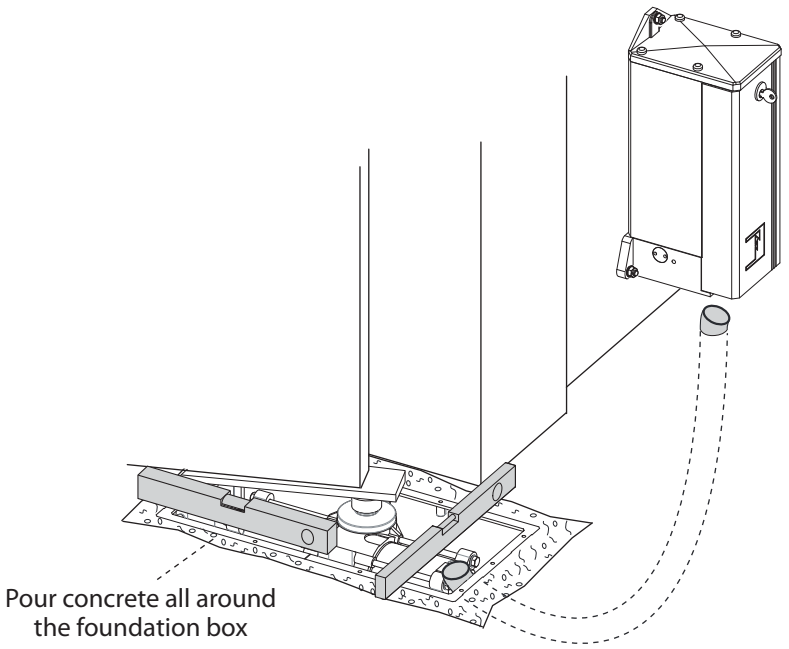

Pic. 11

CONNECTING OIL PIPES

Lead the oil copper pipes to the jack joints through the previously laid duct.

IMPORTANT: any bending of the copper pipes is to be smooth and free from sharp corners. The copper pipes with their glands must be securely tightened into the joints by the nuts.

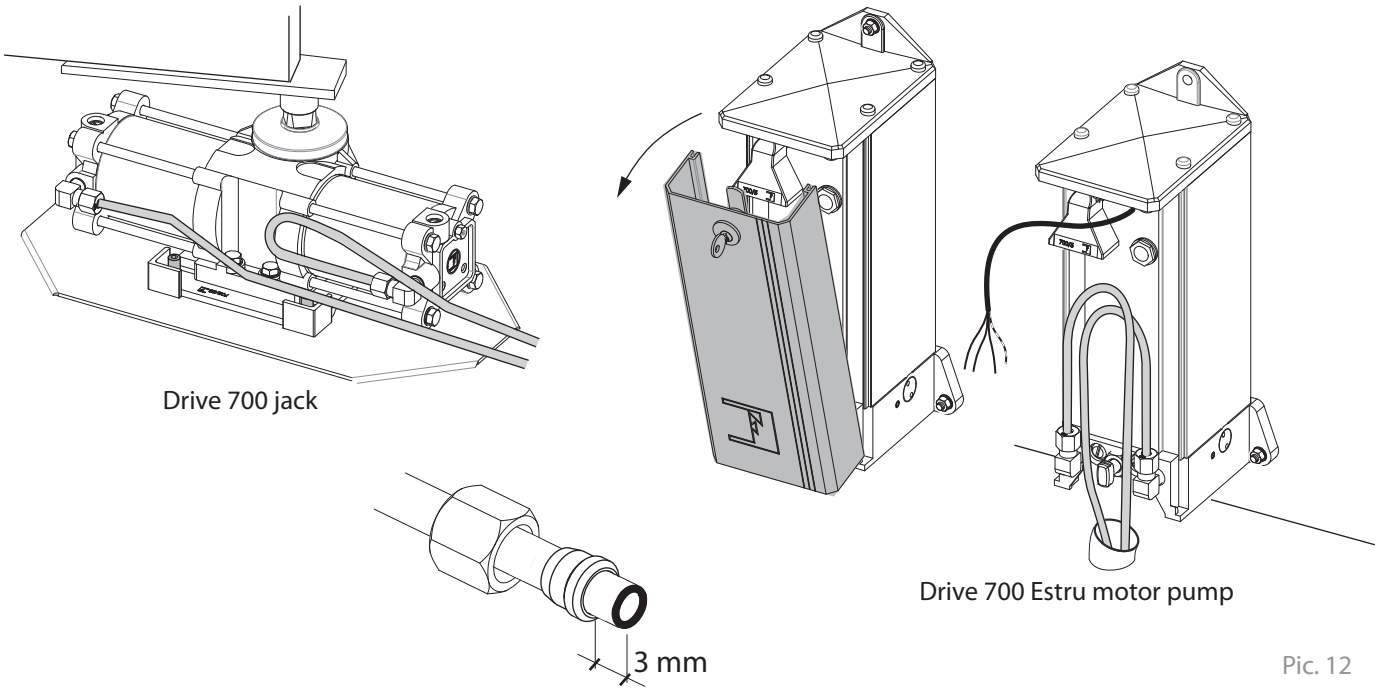

Pic. 12

FILLING WITH OIL

Drive 700 motor pump and jack come without oil inside, which is to be poured into the unit after piping has been completed. To fill the motor pump with oil, pull the funnel out and turn it upwards as described in Pic. 13.

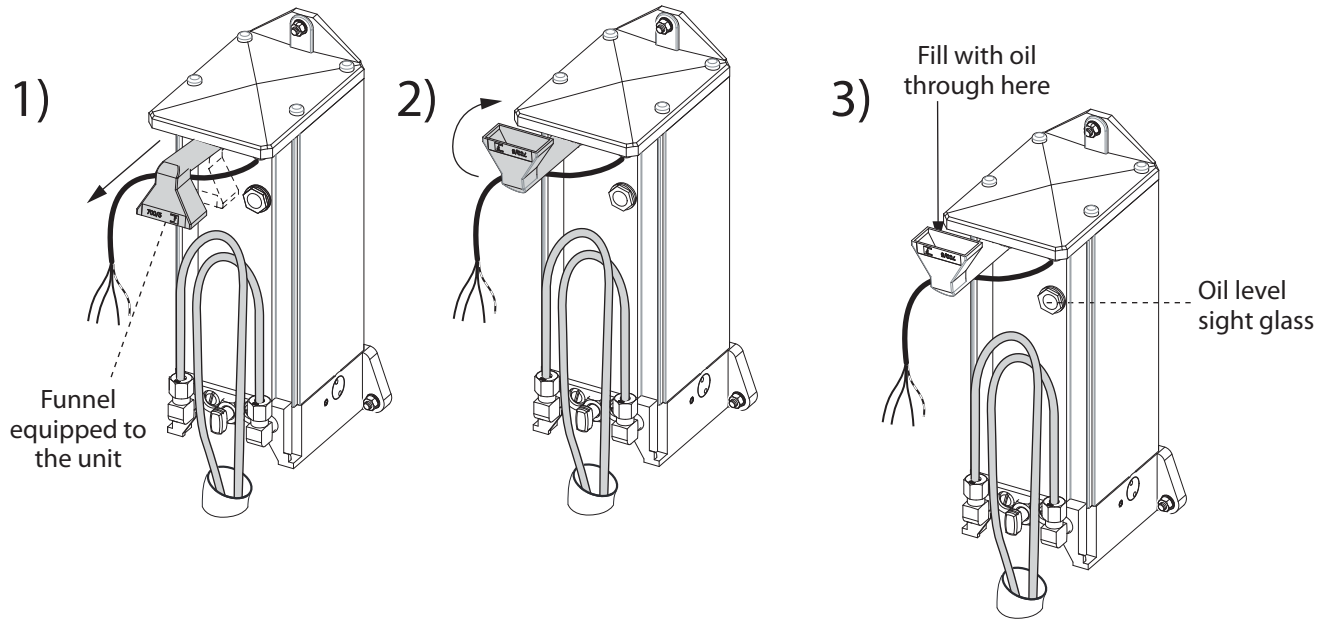

IMPORTANT: carry out the electrical connections to the motor pump so the first running test open and close can be made allowing oil to be pumped into the jack as well.

Pic. 13

English

ELECTRICAL CONNECTIONS

Drive 700 Estru motor pump is equipped with a 230 V - 50 Hz cable for electric power supply; bring the connections to the Elpro 27 main control panel by an electric cable and connector.
Make sure the two live wires of the electric motor be connected to the respective terminals in Elpro 27 to get proper open and close operations.

Should motor fails at starting, add a 12,5 µF capacitor to the live wires of the power supply.

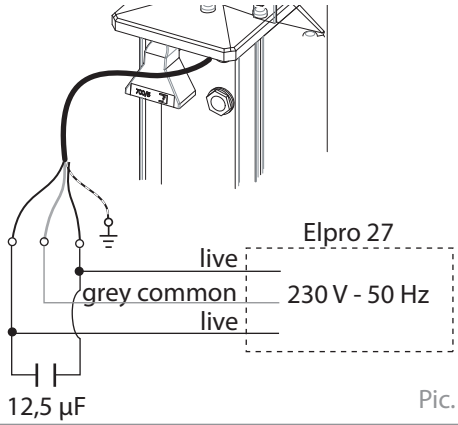

Pic. 14

ADJUSTING THRUST POWER

It is possible to increase or decrease the thrust power, that the jack can exert, by means of two screws, one green and one red, that control the oil flow to the nearest joint respectively.
Oil pipes are therefore to be connected to the jack in view of the following:
• **red** screw controls pressure in **closing**;
• **green** screw controls pressure in **opening**.

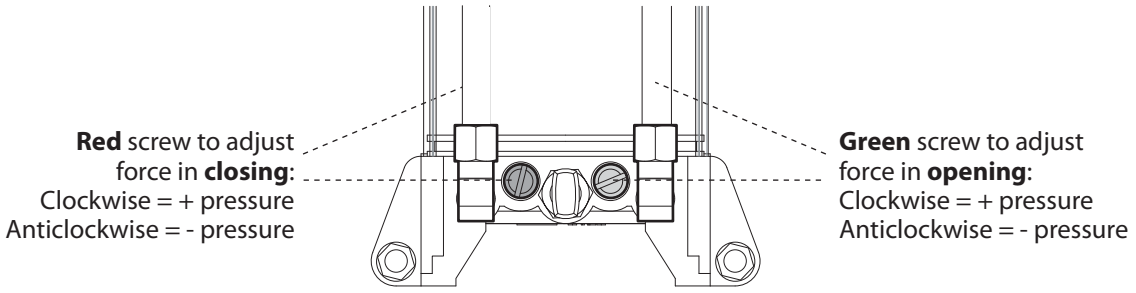

IMPORTANT: the red and green screws control oil pressure to the nearest joint. Therefore connect the joint which is next to the red screw to get control on closing, while the joint next to thegreen screw is for opening.

Pic. 15

RELEASING FOR MANUAL OPERATIONS

Drive 700 Estru motor pump, double locking version, is designed to allow for jack overriding and in this way it is possible to open and close the gate by hand. Tighten the knob again to bring back locking feature. On the other way, with the non locking, reversible version, only the gate lock is to be opened first by its key and then the gate can be moved by hand.

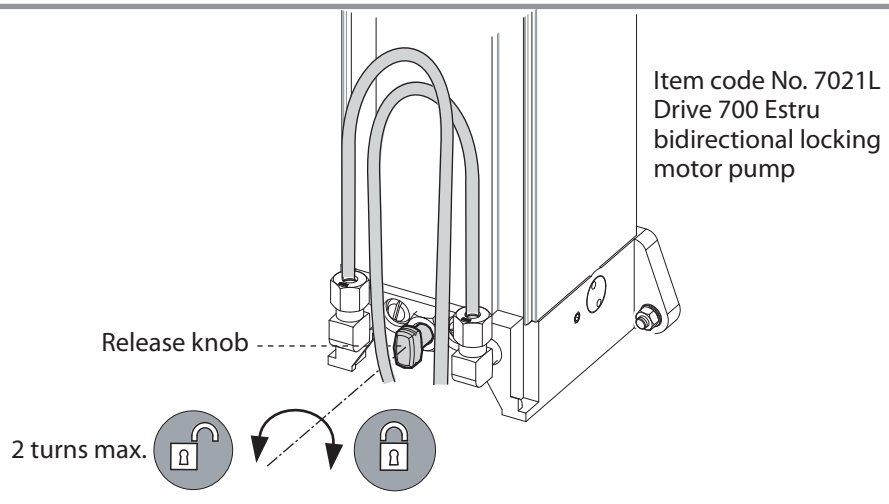

Pic. 16

SLOWDOWN SETTING

Gate slowdown in open and close by action of the jack occurs hydraulically over approximately the last 40° degrees of rotation, before the end of the permitted turning of the jack shaft. Only the speed can be controlled, but not the position when slowdown starts. Control is by the screws that are incorporated in the jack end castings.

- Turning **clockwise** = **speed is decreased** in slowdown (more slowdown).
- Turning **anticlockwise** = **speed is increased** in slowdown (less slowdown).

IMPORTANT: it is recommended that ground gate stops be always installed, in opening and closing, with all the versions of Drive 700.

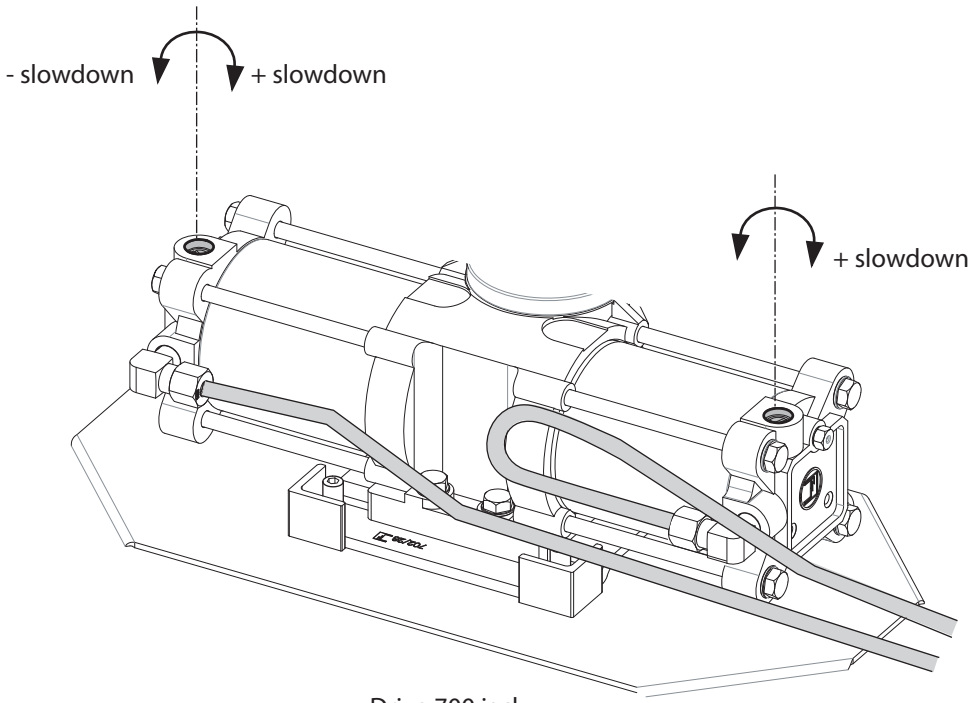

Drive 700 jack

Pic. 17

English

MAINTENANCE RECORD

hand over to the end user of the installation

FADINI
the gate opener
Made in Italy

Installation address:	Maintainer:	Date:

Installation type:				Operator model:	Quantity of models installed:
Sliding gate	☐	**Folding door**	☐		
Swinging gate	☒	**Road barrier**	☐	Dimensions per gate leaf:	
Over-head door	☐	**Bollard**	☐		
Lateral folding door	☐	.....	☐	Weight per gate leaf:	Installation date:

NOTE WELL: this document must record any ordinary and extraordinary services including installation, maintenance, repairs and replacements to be made only by using Fadini original spare parts.
This document, for the data included in it, must be made available to authorized inspectors/officers, and a copy of it must be handed over the end user/s.

The installer/maintainer are liable for the functionalities and safety features of the installation only if maintenance is carried on by qualified technical people appointed by themselves and agreed upon with the end user/s.

N°	Service date	Service description	Technical maintainer	End user/s
1				
2				
3				
4				
5				
6				

Stamp and signature
installation technician/maintainer

Signed for acceptance
end user
buyer

hand over to the end user of the installation

English

TECHNICAL SPECIFICATIONS

ELECTRIC MOTOR	
Power output	0,24 kW (0,33 HP)
Absorbed power	400 W
Frequency	50 Hz
Supply voltage	230 Vac
Absorbed current	2 A
Capacitor	12,5 µF
Motor rotation speed	1.350 rpm
Intermittent service	S3

OIL-HYDRAULIC DRIVE UNIT - OIL-HYDRAULIC JACK	
P3 - Hydraulic pump capacity	0,85 l/1'
Working temperature	-20 °C +80 °C *[A]*
Oil type	Oil Fadini - Item 708L
Gate rotation	110°/175°
Max. rated torque	235 Nm
Maximum pressure	30 atm
Piston diameter	75 mm
Piston stroke	52 mm
Oil tank capacity drive unit	0,95 dm^3
Oil volume in the jack	0,25 dm^3
Motor-pump static weight	8 kg
Weight of jack with accessories	16 kg
Max. gate weight per leaf	700 kg
Max. gate width per leaf	4 m
Protection standard	IP 67

[A]: -40 °C with specific optional accessories (Ref. General Catalogue).

PERFORMANCE (110° gate rotation)		
Frequency of use	semi-intensive	
Service cycle	opening	~ 23 s
	dwell	15 s
	chiusura	~ 23 s
	dwell	15 s
Complete cycle time	~ 76 s	
Complete cycles opening-dwell-closing-dwell	No. 45/hour	

PERFORMANCE (175° gate rotation)		
Frequency of use	semi-intensive	
Service cycle	opening	~ 28 s
	dwell	20 s
	chiusura	~ 28 s
	dwell	20 s
Complete cycle time	~ 96 s	
Complete cycles opening-dwell-closing-dwell	No. 40/hour	

VERSIONS

- Braking in opening and closing
- Hydraulic device for bidirectional locking
- Non locking (reversible): an electric lock is needed

English

JACK

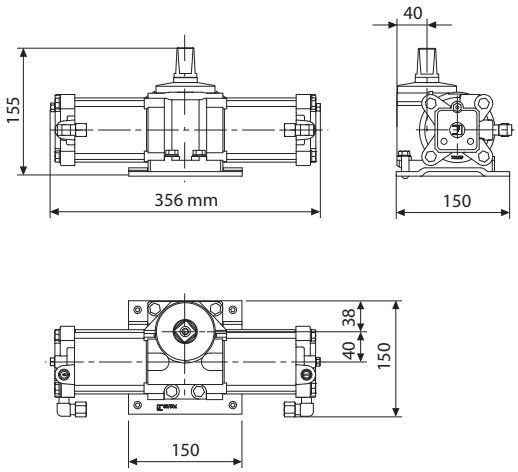

OIL-HYDRAULIC MOTOR PUMP

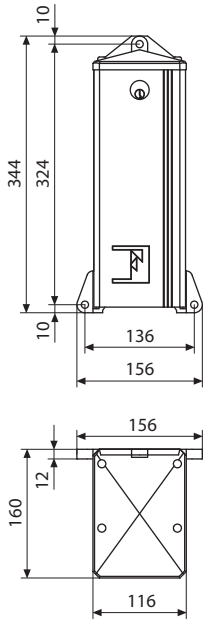

FOUNDATION BOX

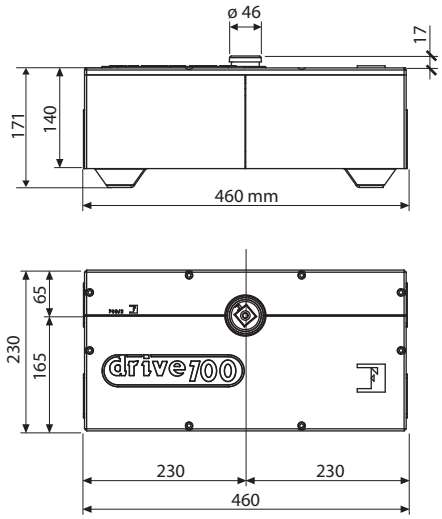

Pic. 18

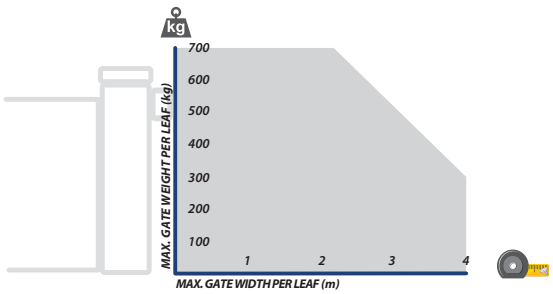

The gate structure, design (solid, in-filled), height and strong wind pressure may affect and decrease the indicated values. Make always sure the gate structure is adequate to automation.

Pic. 19

meccanica FADINI®
Via Mantova, 177/A - 37053 Cerea (VR) Italy
Ph. +39 0442 330422 Fax +39 0442 331054
info@fadini.net - www.fadini.net

CE
2012/19/UE Directive Re. disposal of electric and electronic waste
DISPOSE PROPERLY OF MATERIALS ARMFUL TO THE ENVIRONMENT