FAAC S800H S700H

CASSETTA PORTANTE
SUPPORTING BOX
CASSON PORTANT
TRAGENDES GEHÄUSE
CONTENEDOR DE SOPORTE

Quote in mm - Dimensions in mm - Cotes en mm - Maße in mm - Cotas en mm

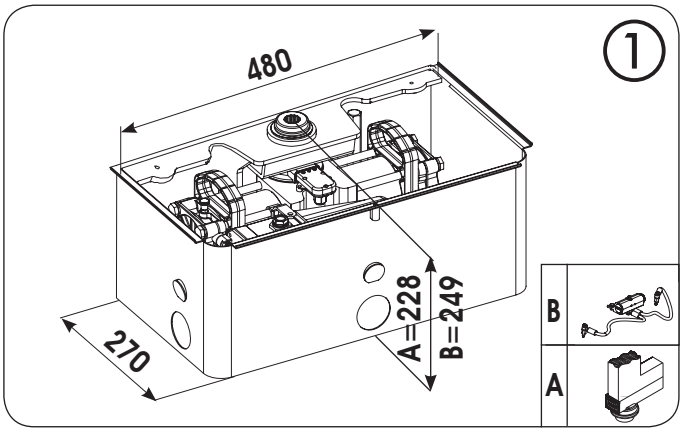

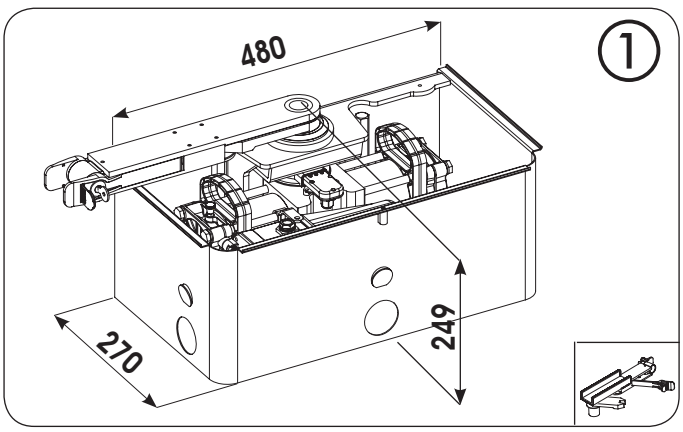

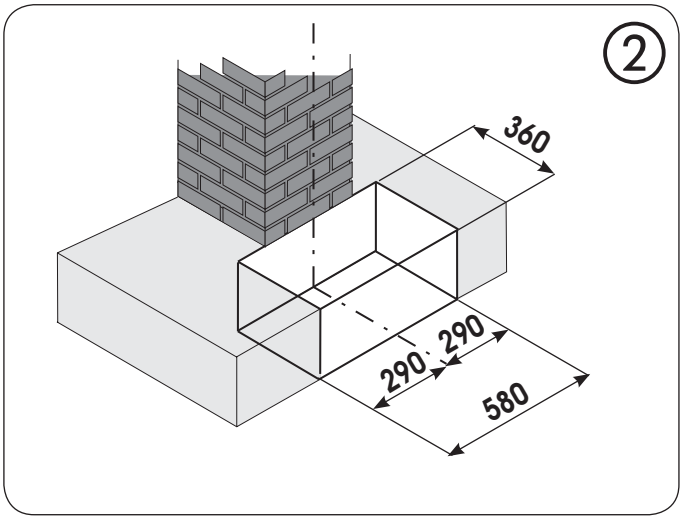

A (mm)		
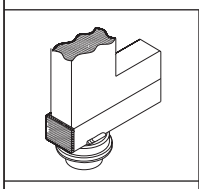	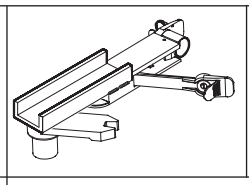	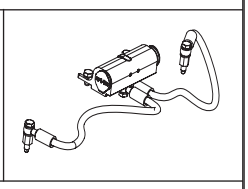
26	47	

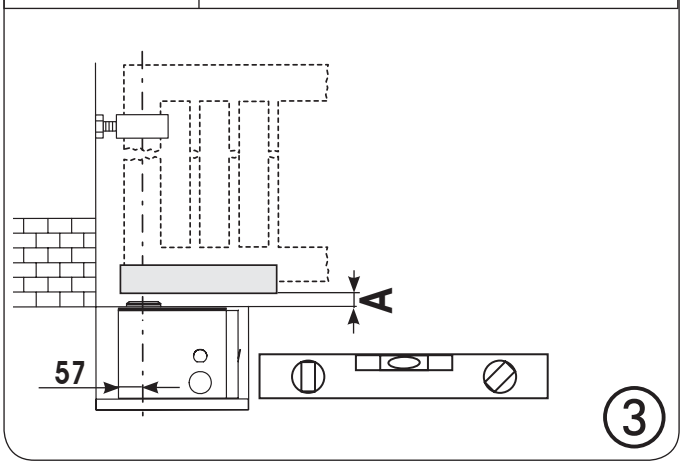

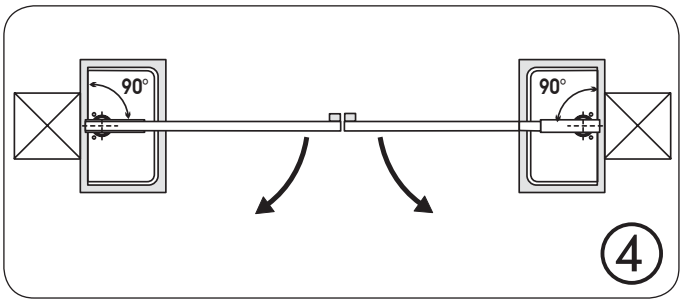

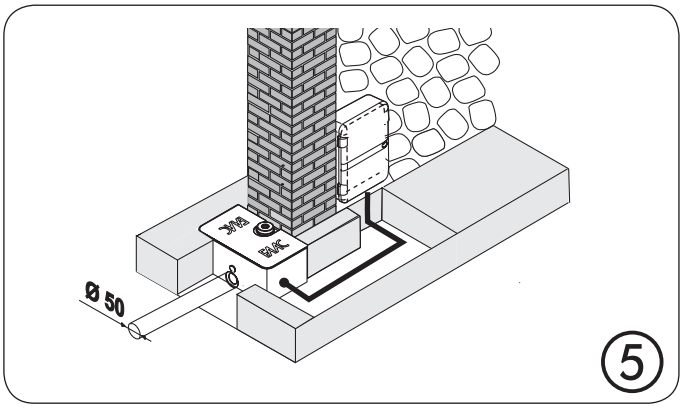

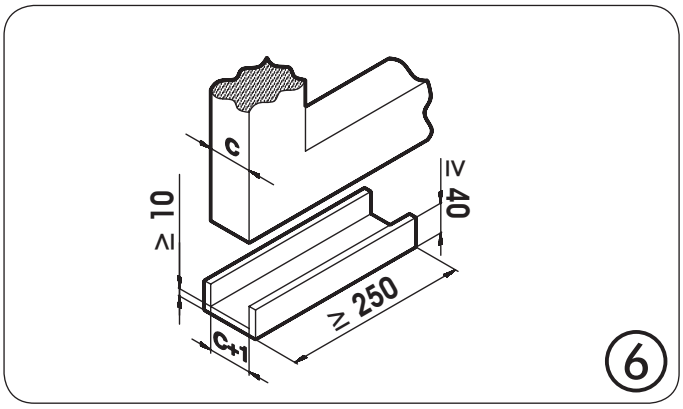

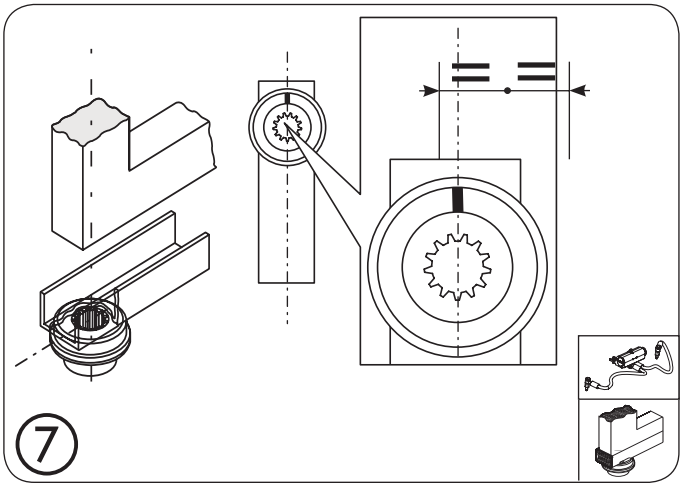

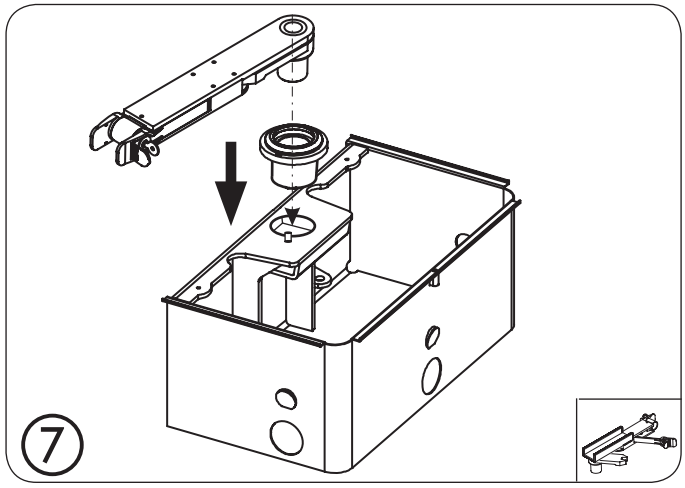

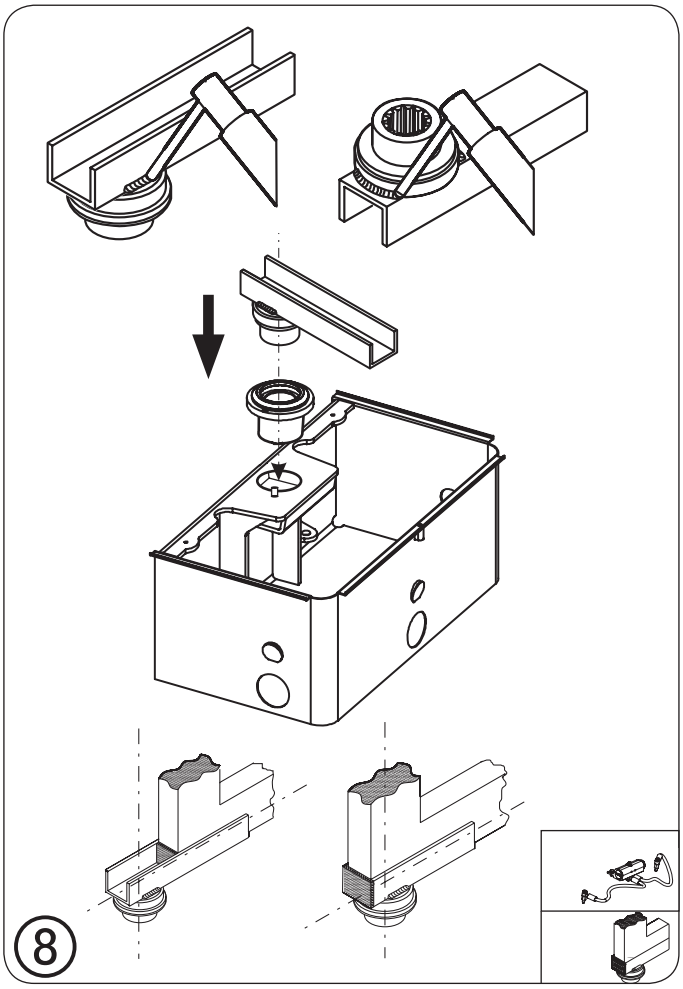

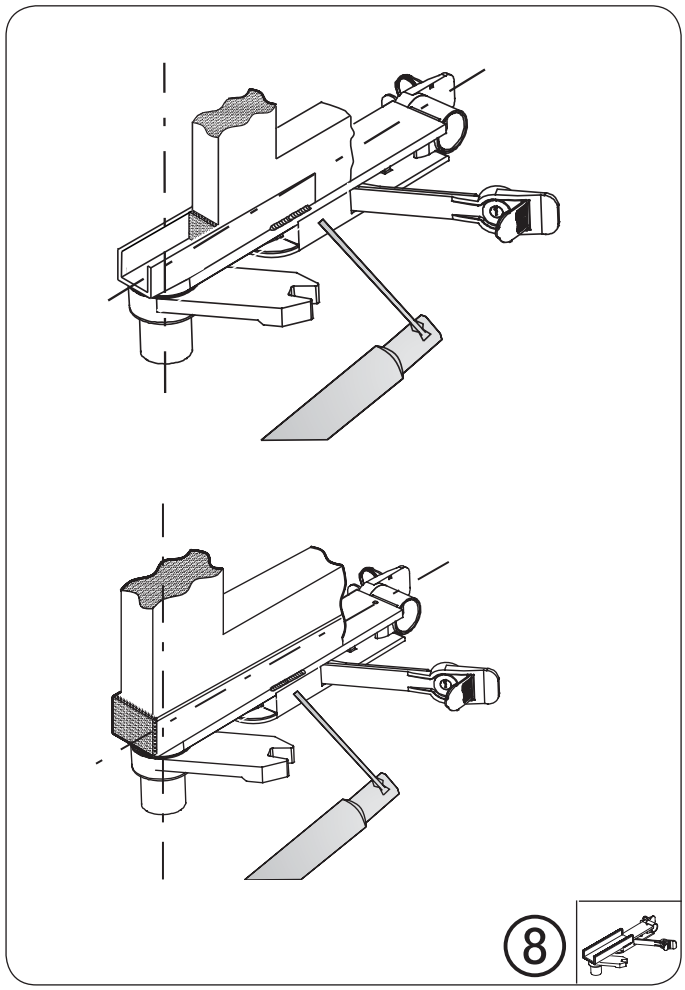

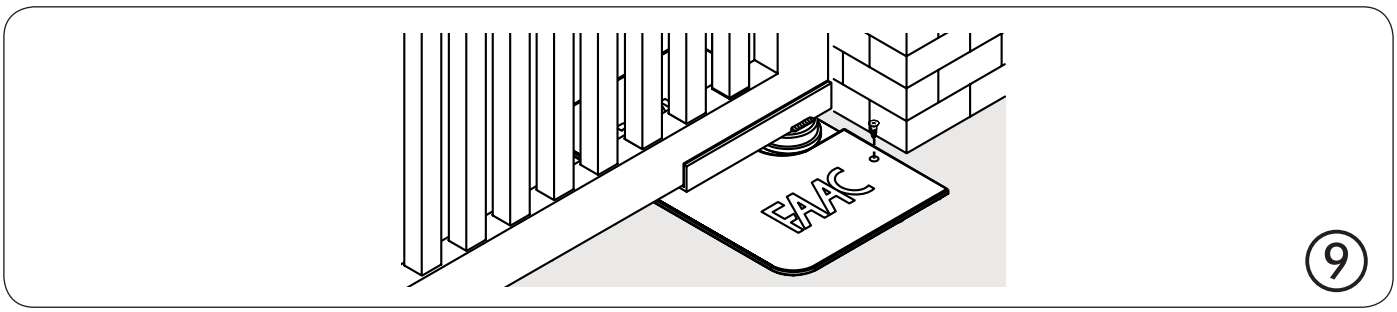

FAAC S.p.A.
Via Benini, 1
40069 Zola Predosa (BO) - ITALIA
Tel. 0039.051.61724 - Fax. 0039.051.758518
www.faac.it
www.faacgroup.com

732550 - Rev. D

www.metalines.com Polydon Industries Ltd, Polydon Park, Radiance Road, Doncaster, South Yorkshire DN1 2TE | **Tel:** 01302 327172 | **Fax:** 01302 380124 sales@metalines.com