CAME

SWING-GATE OPERATOR

FA00095-EN

CE

Official Partner

EXPO

MILANO 2015

FEEDING THE PLANET
ENERGY FOR LIFE

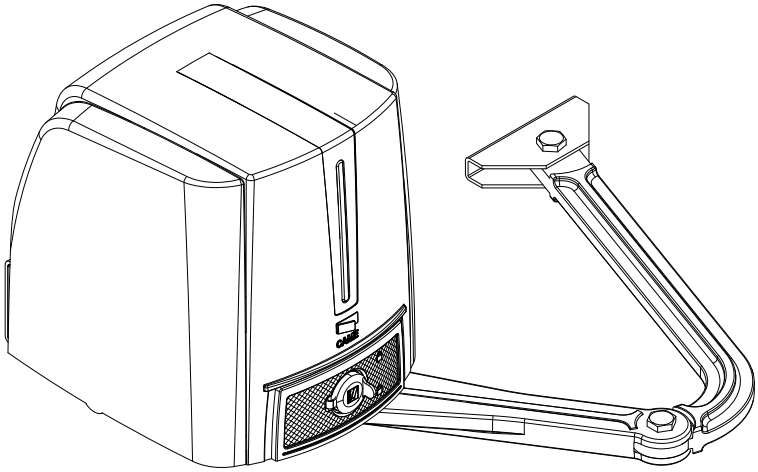

INSTALLATION MANUAL

FA7024CB

EN English

WARNING! important safety instructions for people: READ CAREFULLY!

Premise

• This product should only be used for the purpose for which it was explicitly designed. Any other use is dangerous. CAME Cancelli Automatici S.p.A is not liable for any damage caused by improper, wrongful and unreasonable use • Keep these warnings together with the installation and operation manuals that come with the operator.

Before installing

(checking what's there: if something is missing, do not continue until you have complied with all safety provisions)

• Check that the automated parts are in proper mechanical order, that the operator is level and aligned, and that it opens and closes properly. Make sure you have suitable mechanical stops • If the operator is to be installed at a height of less than 2.5 m from the ground or other access level, make sure you have any necessary protections and/or warnings in place • If any pedestrian openings are fitted into the operator, there must also be a a system to block their opening while they are moving • Make sure that the opening automated door or gate cannot entrap people against the fixed parts of the operator • Do not fit upside down or onto elements that could bend. If necessary, add suitable reinforcements to the anchoring points • Do not install door or gate leaves on tilted surfaces • Make sure any sprinkler systems cannot wet the operator from the ground up • Make sure the temperature range shown on the product literature is suitable to the climate where it will be installed • Follow all instructions as improper installation may result in serious bodily injury • It is important to follow these instructions for the safety of people. Keep these instructions.

Installing

•Suitably section off and demarcate the entire installation site to prevent unauthorized persons from entering the area, especially minors and children • Be careful when handling operators that weigh over 20 kg. If need be, use proper safety hoisting equipment • All opening commands (that is, buttons, key switches, magnetic readers, and so on) must be installed at least 1.85 m from the perimeter of the gate's working area, or where they cannot be reached from outside the gate. Also, any direct commands (whether buttons, touch panels, and so on) must be installed at least 1.5 m from the ground and must not be reachable by unauthorized persons • All maintained action commands, must be fitted in places from which the moving gate leaves and transit and driving areas are visible • Apply, if missing, a permanent sign showing the position of the release device • Before delivering to the users, make sure the system is EN 12453 standard compliant (regarding impact forces), and also make sure the system has been properly adjusted and that any safety, protection and manual release devices are working properly • Apply Warning Signs where necessary and in a visible place, (such as, such as the gate's plate

Special user-instructions and recommendations

• Keep gate operation areas clean and free of any obstructions. Make sure that the photocells are free of any overgrown vegetation and that the operator's area of operation is free of any obstructions • Do not allow children to play with fixed commands, or to loiter in the gate's maneuvering area. Keep any remote control transmitters or any other command device away from children, to prevent the operator from being accidentally activated. • The apparatus may be used by children of eight years and above and by physically, mentally and sensory-challenged people, or even ones without any experience, provided this happens under close supervision or once they have been properly instructed to use the apparatus safely and to the potential hazards involved. Children must not play with the apparatus. Cleaning and maintenance by users must not be done by children, unless properly supervised • Frequently check the system for any malfunctions or signs of wear and tear or damage to the moving structures, to the component parts, all anchoring points, including cables and any accessible connections. Keep any hinges, moving joints and slide rails properly lubricated • Perform functional checks on the photocells and sensitive safety edges, every six months. To check whether the photocells are working, wave an object in front of them while the gate is closing; if the operator inverts its direction of travel or suddenly stops, the photocells are working properly. This is the only maintenance operation to do with the power on. Constantly clean the photocells' glass covers using a slightly water-moistened cloth; do not use solvents or other chemical products that may ruin the devices • If repairs or modifications are required to the system, release the operator and do not use it until safety conditions have been restored • Cut off the power supply before releasing the operator for manual openings and before any other operation, to prevent potentially hazardous situations. Read the instructions if the power supply cable is damaged, it must be replaced by the manufacturer or authorized technical assistance service, or in any case, by similarly qualified persons, to prevent any risk • It is forbidden for users to perform any operations that are not expressly required of them and which are not listed in the manuals. For any repairs, modifications and adjustments and for extra-ordinary maintenance, call technical assistance • Log the job and checks into the periodic maintenance log.

Further recommendations for all

• Keep clear of hinges and mechanical moving parts • Do not enter the operator's area of operation when it is moving • Do not counter the operator's movement as this could result in dangerous situations • Always pay special attention to any dangerous points, which have to be labeled with specific pictograms and/or black and yellow stripes • While using a selector switch or a command in maintained actions, keep checking that there are no persons within the operating range of any moving parts, until the command is released • The gate may move at any time and without warning • Always cut off the mains power supply before performing any maintenance or cleaning.

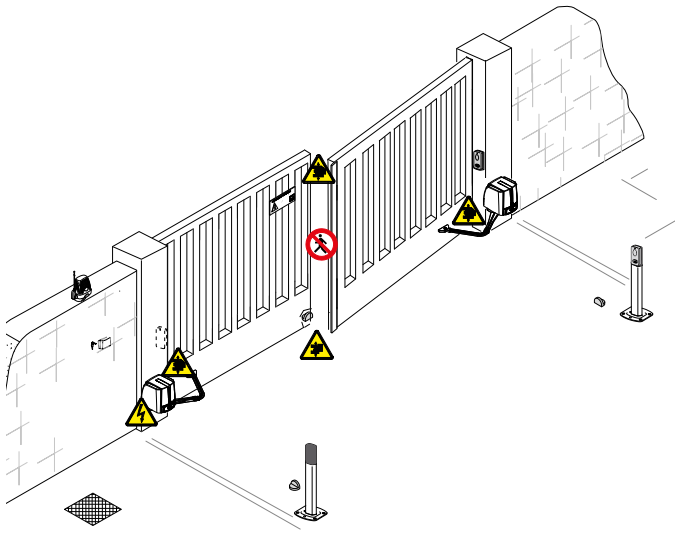


Danger of foot crushing


Danger of hand crushing


Danger! High voltage.


No transiting while the barrier is moving

LEGEND

🕮 This symbol shows which parts to read carefully.
⚠ This symbol shows which parts describe safety issues
☞ This symbol shows which parts to tell users about.

REFERENCE REGULATIONS

Came S.p.A. is certified for the: ISO 9001 quality and ISO 14001 environmental management systems..
This product complies with the current regulations mentioned in the declaration of conformity.

DESCRIPTION

Irreversible operator with control board and segmented graphic display plus jointed transmission-arm for swing gates with leaves up to 2.3 m long.

Intended use

This operator is designed to power swing gates for residential and apartment block use.
🕮 Any installation and/or use other than that specified in this manual is forbidden.

Limits to use

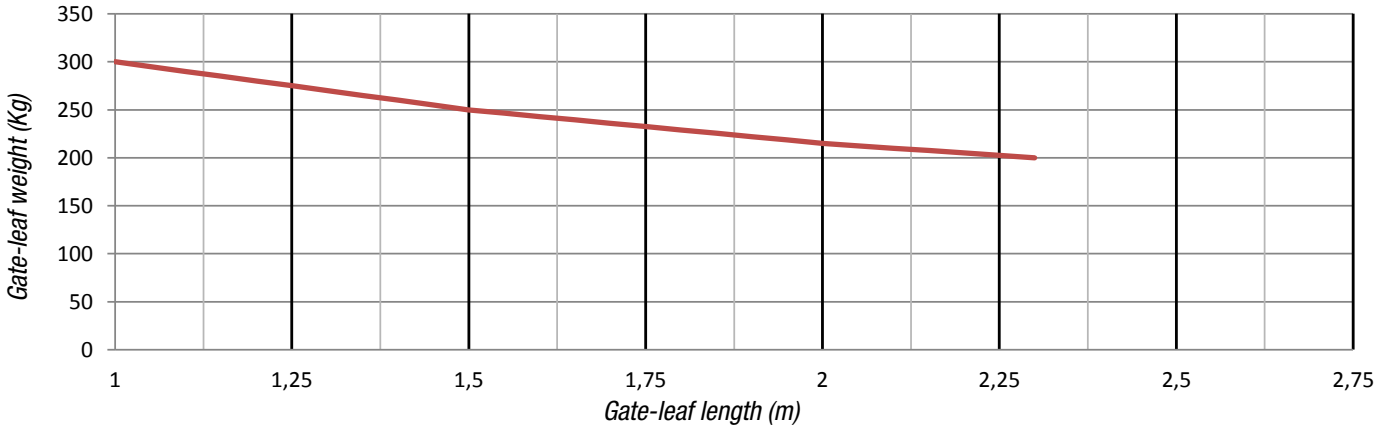

⚠ We suggest you always fit an electrolock onto swing gates for a more reliable closure.

Technical data

Type	FA7024CB
Protection rating (IP)	54
Power supply (V - 50/60 Hz)	230 AC
Power supply motor (V)	24 DC
Stand-by consumption (W)	5.5
Stand-by consumption with the RGP1 (W) module	0.5
Power (W)	140
Torque (Nm)	180 max
Opening time at 90° (s)	13 ÷ 30
Duty cycle (%)	INTENSIVE USE
Operating temperature (°C)	-20 ÷ +55
Insulation class	I
Weight (Kg)	12

Dimensions

(mm)

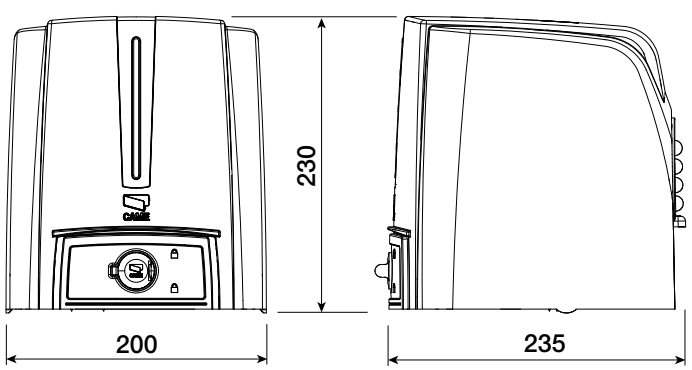

Description of parts

1. Cover
2. Post bracket
3. Rubber shim
4. Control board
5. Gearmotor
6. Power supply terminal
7. Release hatch
8. Transformer
9. Transmission arm
10. Joint arm
11. Gate bracket
12. Mechanical stops

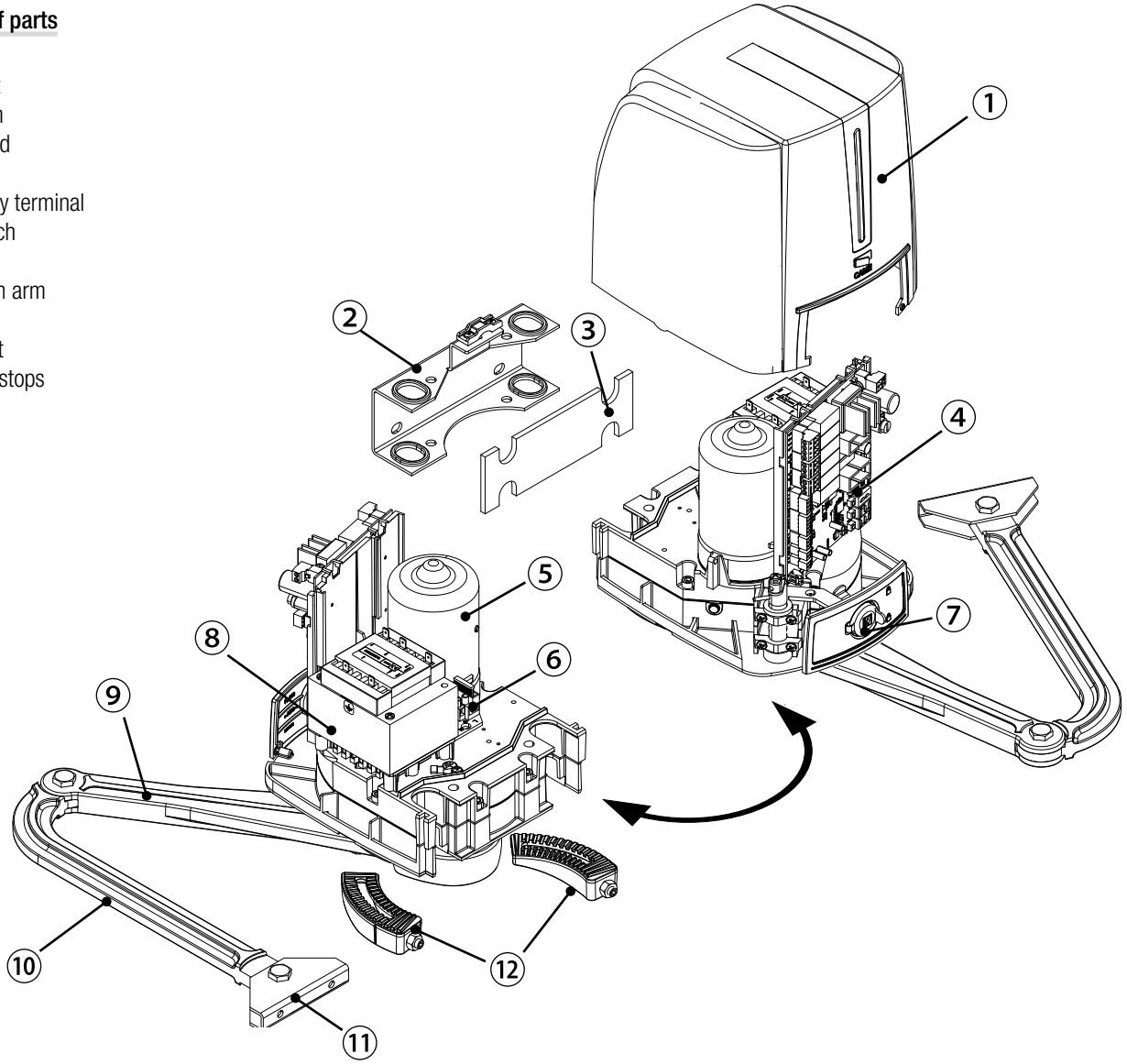

Standard installation

1. Operator
2. Gearmotor
3. Flashing light
4. Antenna
5. Control device
6. Photocells
7. Photocells post
8. Mechanical gate stop
9. Junction pit

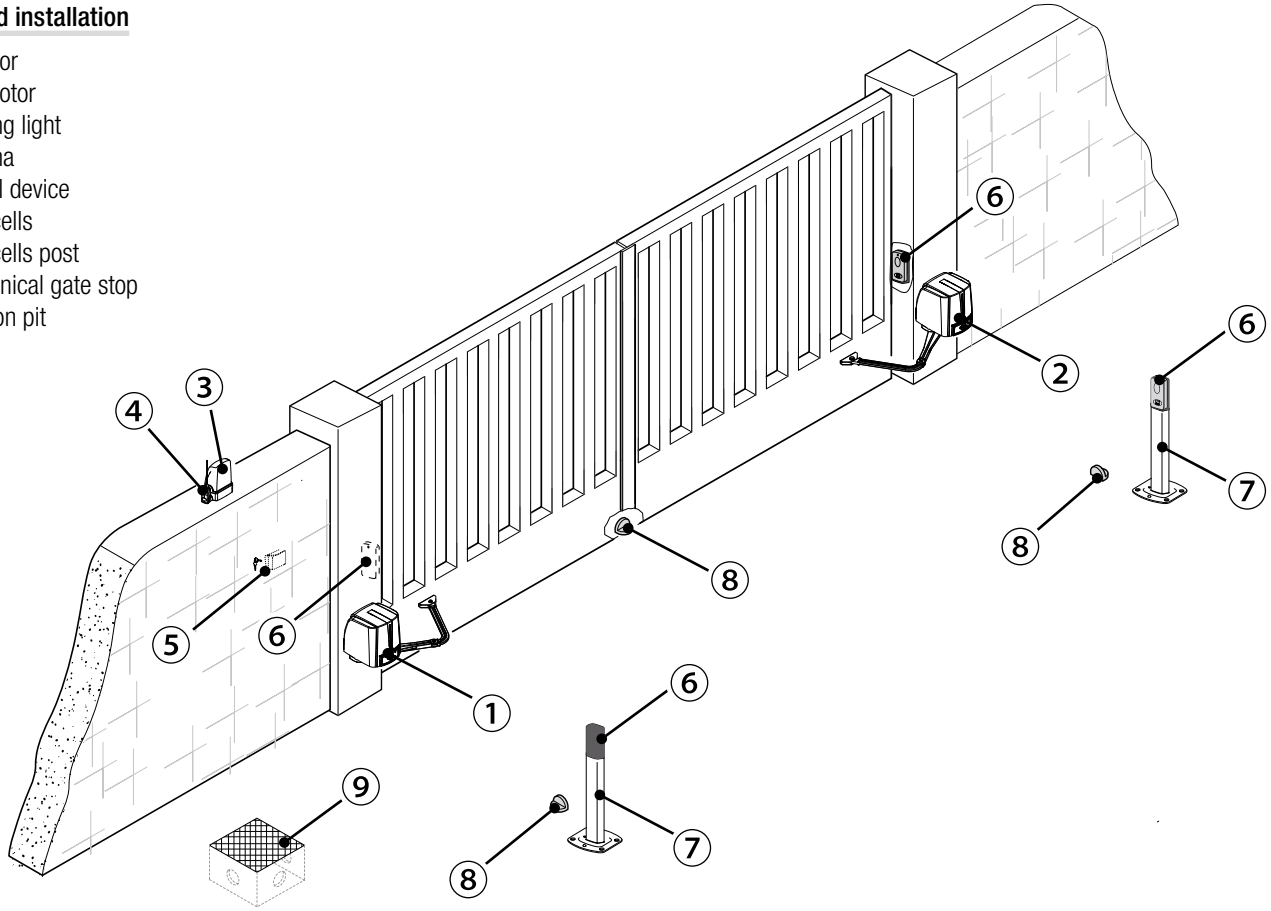

Applicative examples

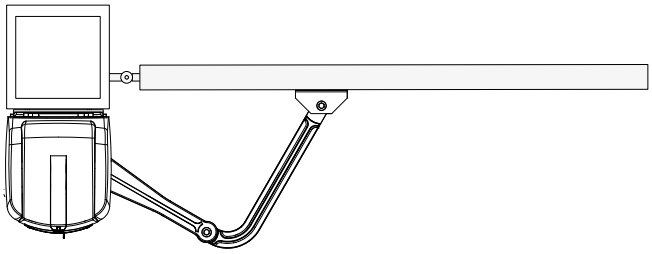

Fitted with standard jointed transmission-arm.

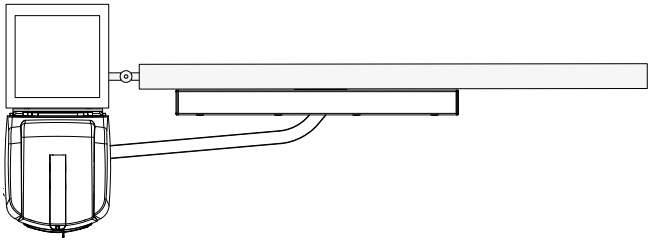

Fitted with the STYLO-BD straight transmission-arm and slide rail.

GENERAL INSTALLATION INDICATIONS

⚠ Only skilled, qualified staff must install this product.

Preliminary checks

⚠ Before beginning, do the following:

- check that the gate structure is sturdy enough, the hinges work efficiently and that there is no friction between the fixed and moving parts;
- if ground stops are not, or cannot be, fitted, use the supplied mechanical stops;
- make sure that the point where the gearmotor is fastened is protected from any impacts and that the anchoring surface is solid enough;
- have in place a suitable dual pole cut-off switch with minimum contact openings of 3 mm, and section the power supply;
- ⏚ make sure that any connections inside the container (ones that ensure continuity to the protection circuit) are fitted with additional insulation with respect to those of other electrical parts inside:

set up suitable tubes and conduits for the electric cables to pass through, making sure they are protected from any mechanical damage

Tools and materials

Make sure you have all the tools and materials you will need for installing in total safety and in compliance with applicable regulations. The figure shows some of the equipment installers will need.

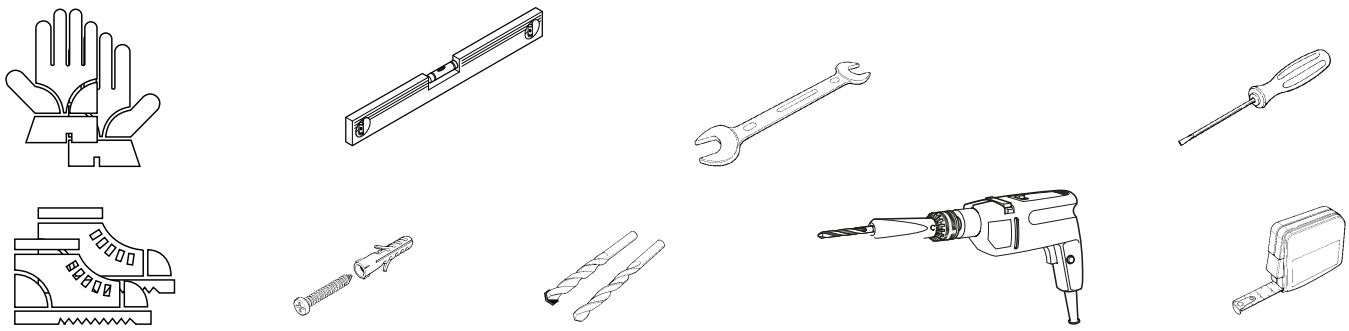

Cable types and minimum thicknesses

Connection	Tipo cavo	Cable length 1 < 15 m	Cable length 15 < 30 m
Control panel power supply 230 V AC	H05RN-F	3G x 1,5 mm^2	3G x 2,5 mm^2
Motor/encoder power supply 24 V DC	FROR CEI 20-22 CEI EN 50267-2-1	3 x 1,5 mm^2	3 x 2,5 mm^2
Flashing light		2 x 0,5 mm^2	
Photocell transmitters		2 x 0,5 mm^2	
Photocell receivers		4 x 0,5 mm^2	
Command and safety device		2 x 0,5 mm^2	
Antenna	the RG58 antenna	max 10 m	
Came Remote Protocol (CRP)	UTP CAT5	max 1000 m	

🕮 If cable lengths differ from those specified in the table, establish the cable sections depending on the actual power draw of the connected devices and according to the provisions of regulation CEI EN 60204-1.

For multiple, sequential loads along the same line, the dimensions on the table need to be recalculated according to the actual power draw and distances. For connecting products that are not contemplated in this manual, see the literature accompanying said products.

INSTALLATION

⚠ The following illustrations are just examples, in that the space available for fitting the operator and accessories varies depending on the overall dimensions. It is up to the installer to find the most suitable solution.

🕮 The drawing show an operator fitted on the left. Install the operator on the right, symmetrically.

Corrugate tube laying

Lay the corrugated tubes you will need for the cables coming out of the junction pit.
🕮 The number of tubes depends on the type of system and the accessories you are going to fit.
You need to lay two corrugated tubes where the operator is fitted.

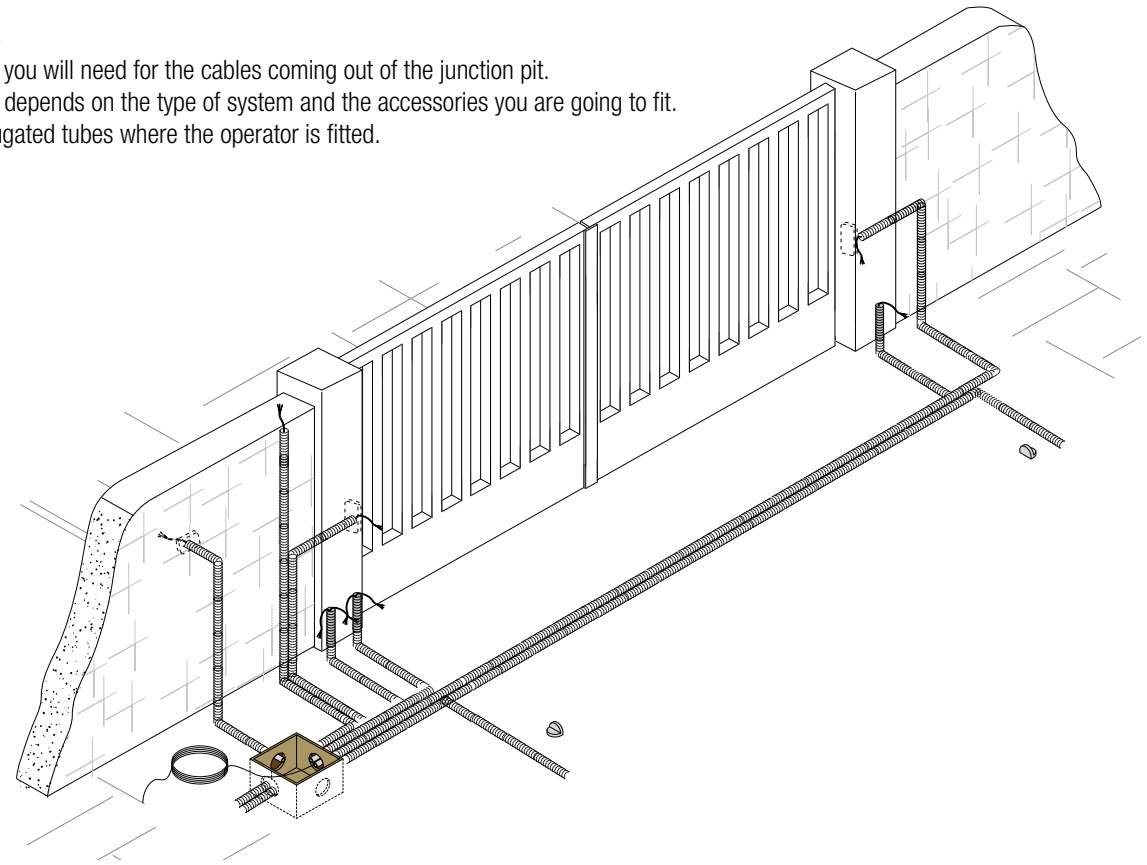

Fastening the brackets

Establish where you will fit the gate brace and measure where the gate-post brace will fit. Make sure to respect the quotas shown in the drawing and table.

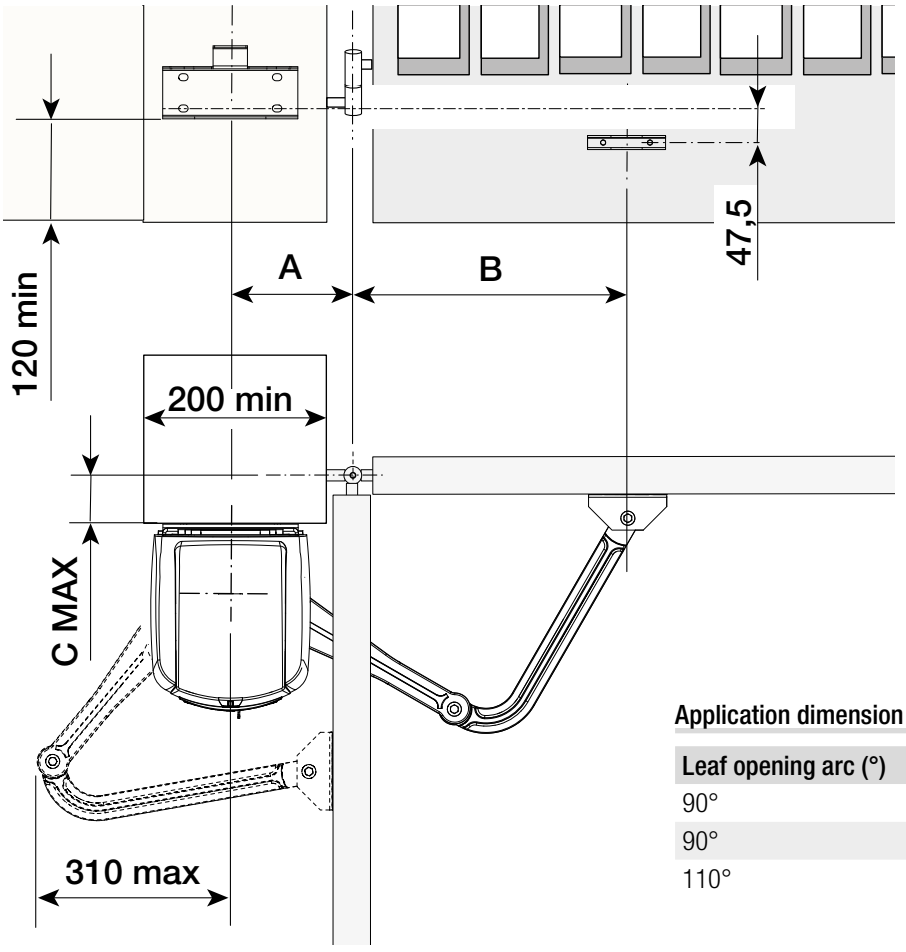

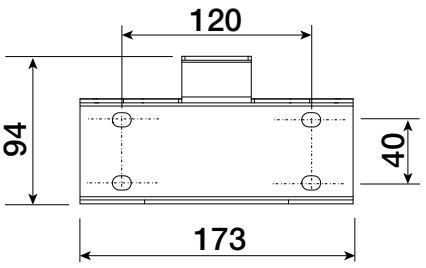

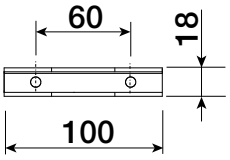

Application dimension (mm)

Leaf opening arc (°)	A	C MAX	B
90°	140	0 ÷ 200	420
90°	160÷180	200	380
110°	200÷220	0 ÷ 50	400

Marked the spots where the gate-post brace and gate brace will be fitted. The center-distances of the holes on the braces are shown in the Dimensions paragraph.
Drill the anchoring points, fit the dowels or use plugs that will hold fast the screws.
📖 The drawings are mere examples. Installers should carefully choose the most suitable set up according to the type and thickness of the gate leaf.

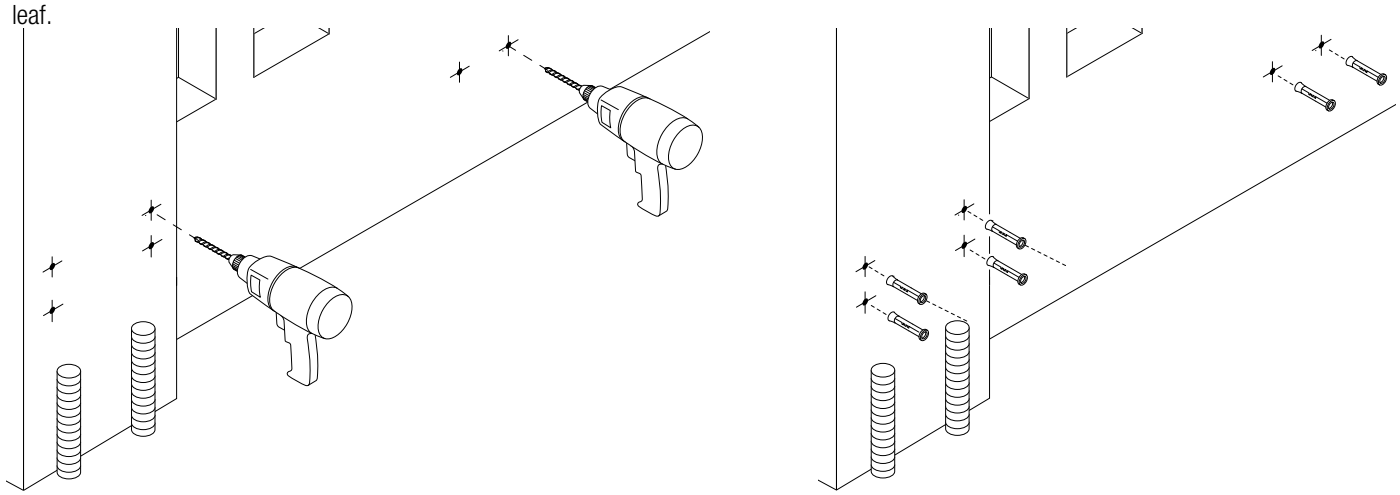

Before fitting the operator, remove the casing, as follows: - open the release-hatch protective-cap, fit the trilobe key into the lock and turn it counterclockwise. (❶).
- open the hatch door and loosen the screw that fastens the casing to the gearmotor (❷).
- raise the cove by slightly pulling on its sides **and** pull out the gate-post brace from the gearmotor (❸).

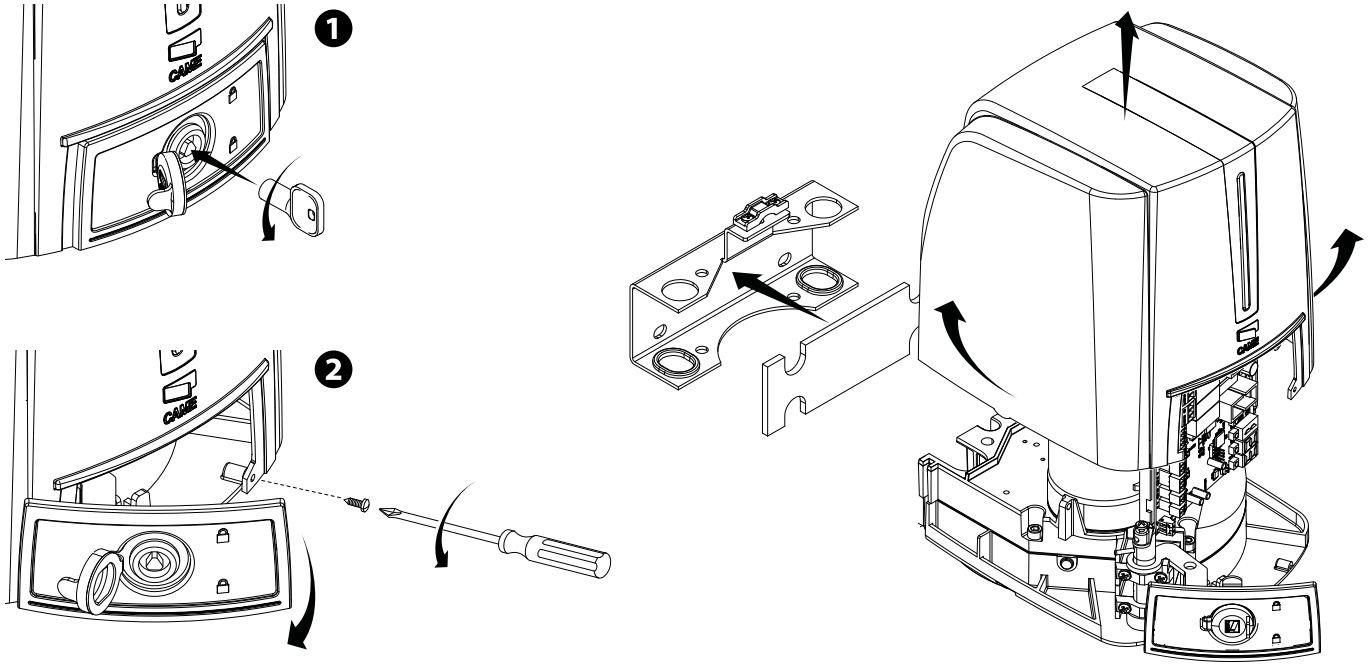

Use suitable screws to fasten the brackets.
Fit the rubber shim into the gate-post brace. Lay the electric cables and run them through the cable glands; fasten them using the clamp on the gate-post brace.

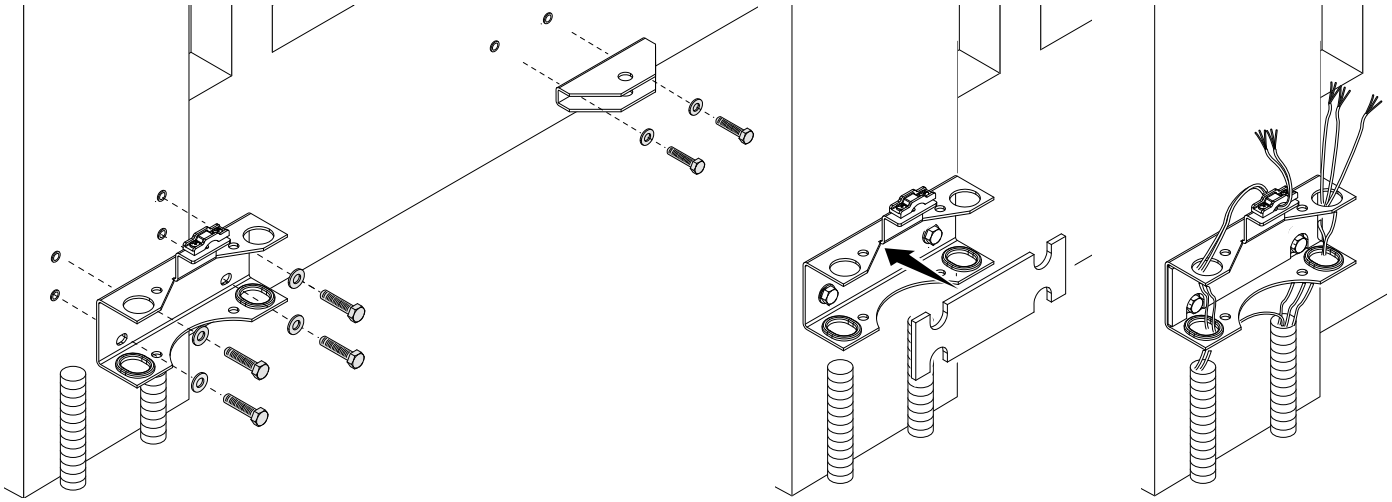

Fastening the operator

Fit the gearmotor into the gate.post brace and tighten the nuts and bolts.
Fit the plug into the gearmotor's drive-shaft hole.

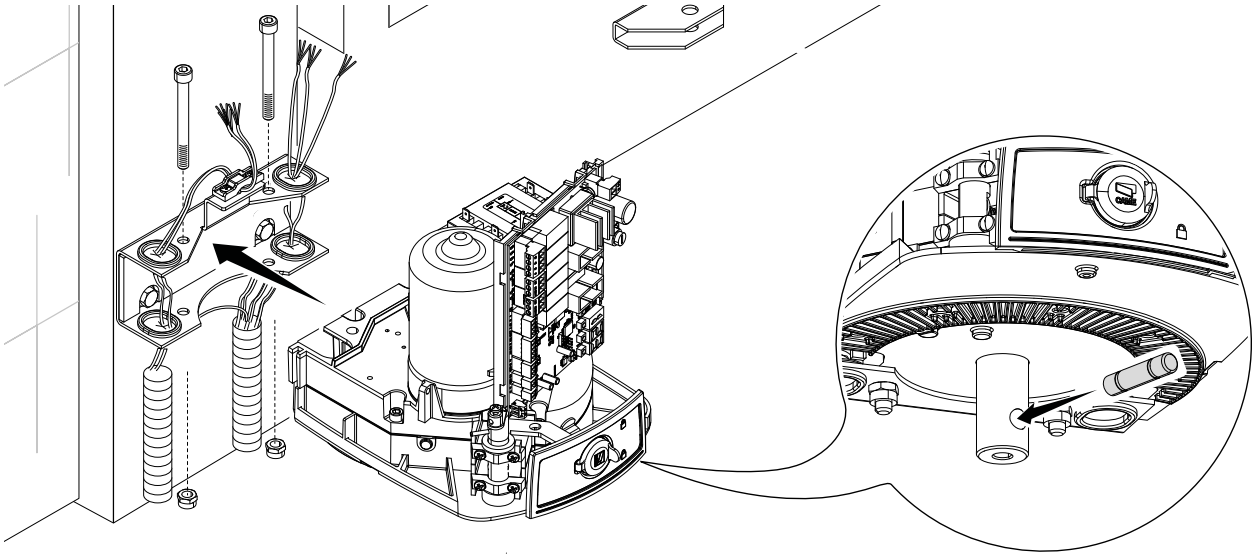

Fasten the transmission arm to the drive-shaft using the slow-shaft washer and bolt.

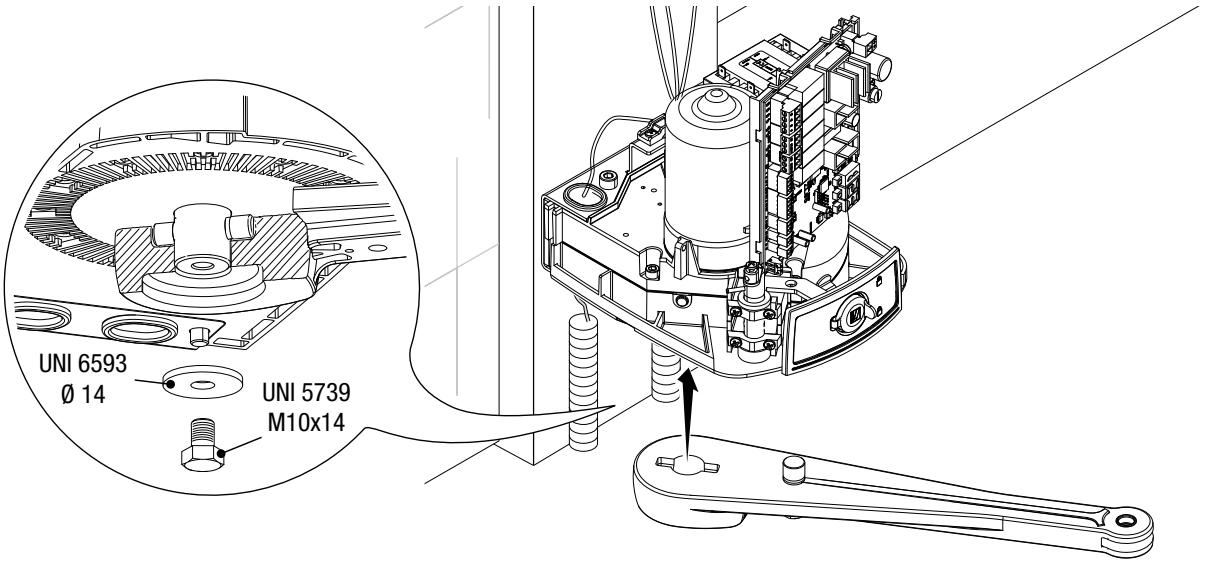

Pin the driven arm to the transmission arm and tighten the washer and bolt.

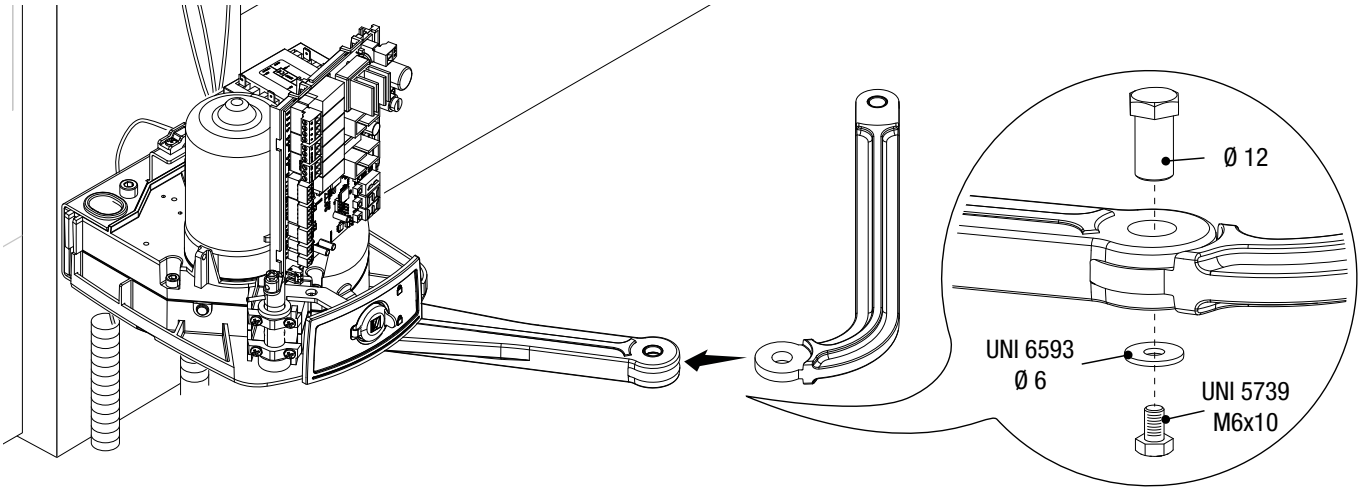

Release the gearmotor (see RELEASING THE GEARMOTOR), fit the driven arm to the gate brace as shown in the drawing.

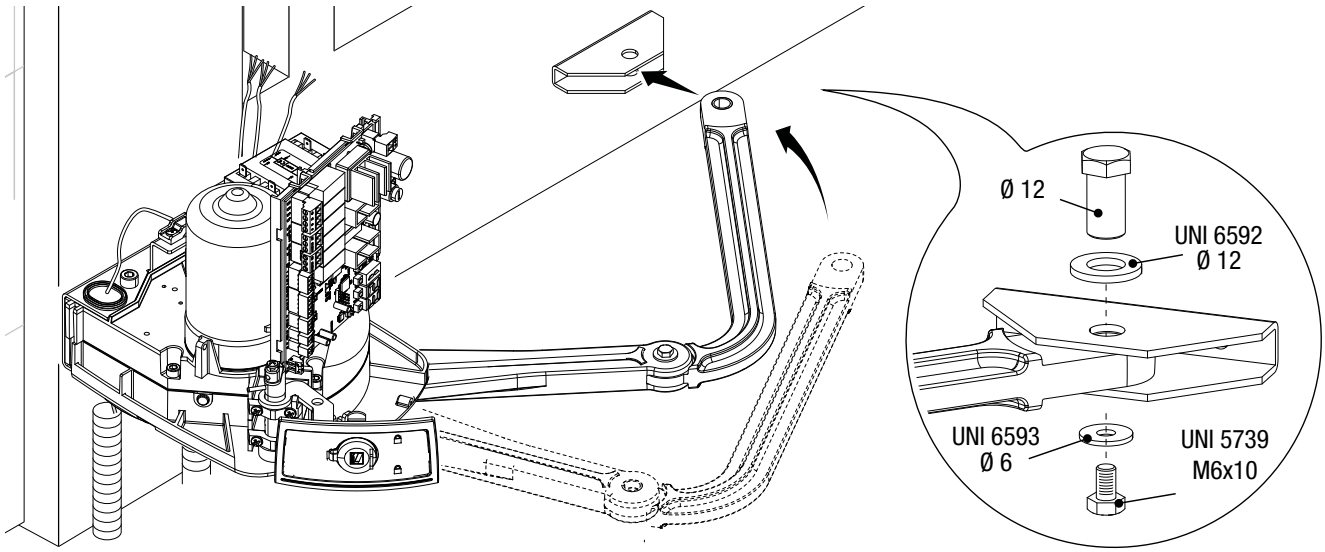

Fastening the mechanical stops

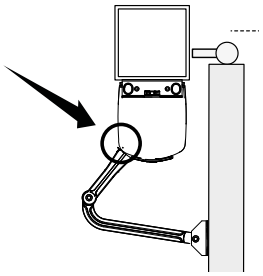

Release the gearmotor.

When opening.

Entirely open the gate leaf. Mark the casing where the center of the arm is.(❶).

Manually close the gate leaf. Place the mechanical stop under the casing. The mark on the case must match the groove on the stop, as shown(❷).

Fasten the stop using the screw (❸).

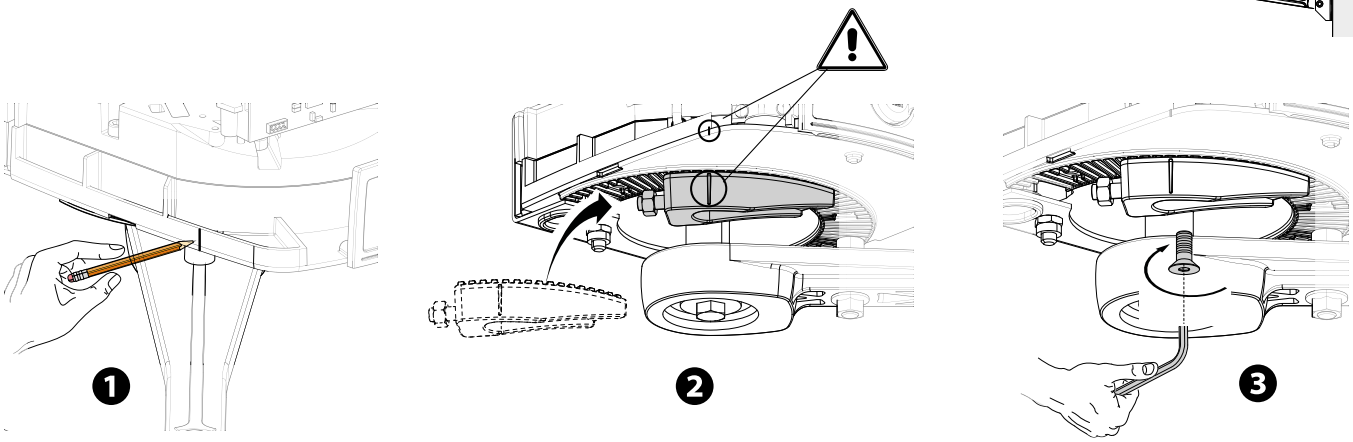

When closing.

Close the leaf. Mark the casing where the center of the arm is. (❹).

Manually open the leaf. Place the second mechanical stop against the opposite side of the arm. The mark on the casing must match the groove on the stop(❺)

. Fasten the stop using the screw (❻).

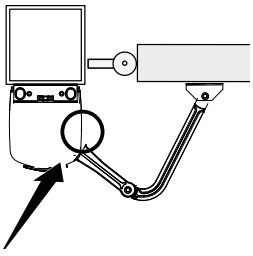

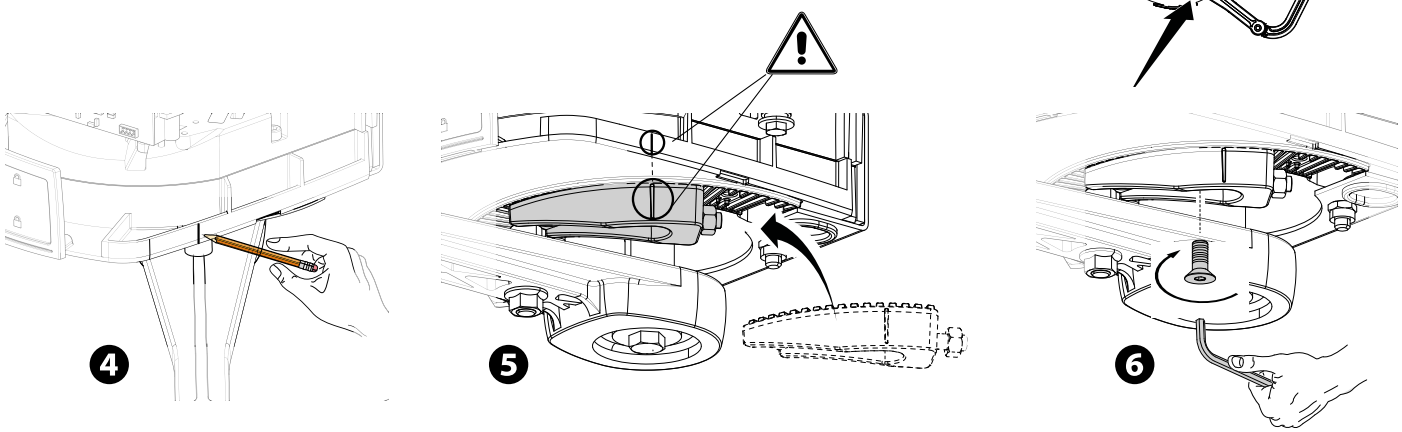

Establishing the limit-switch points

With the gearmotor released and the gate-leaf closed, adjust the closing limit-switch grub screw by turning it clockwise or counterclockwise (❶).
Tighten the nut to fasten the grub-screw (❷).

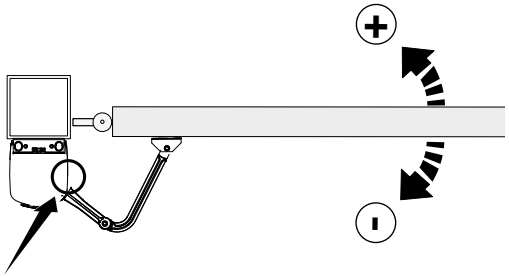

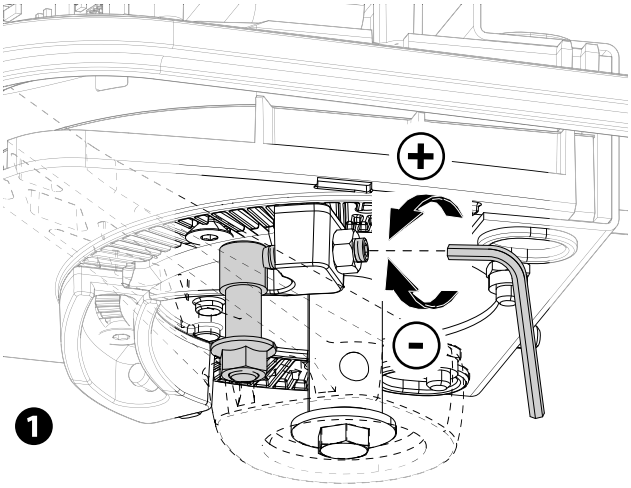

❶

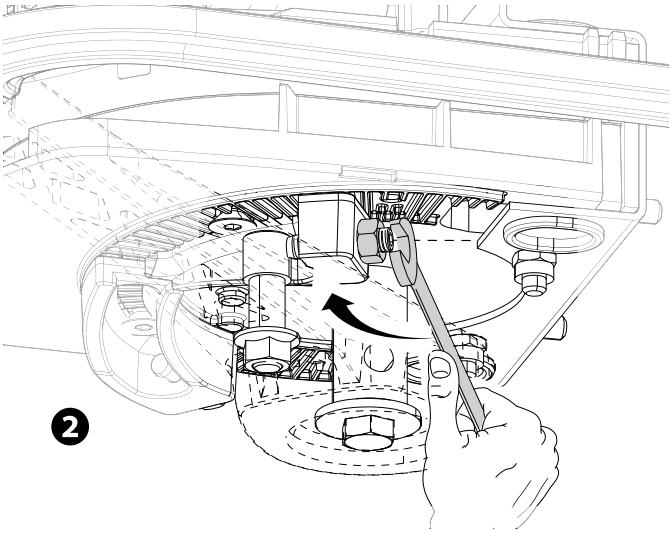

❷

In the same way, set the opening limit-switch on the other stop's grub screw (❸❹).

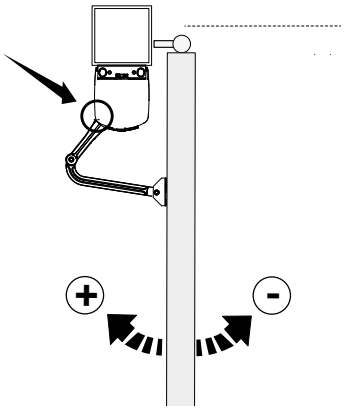

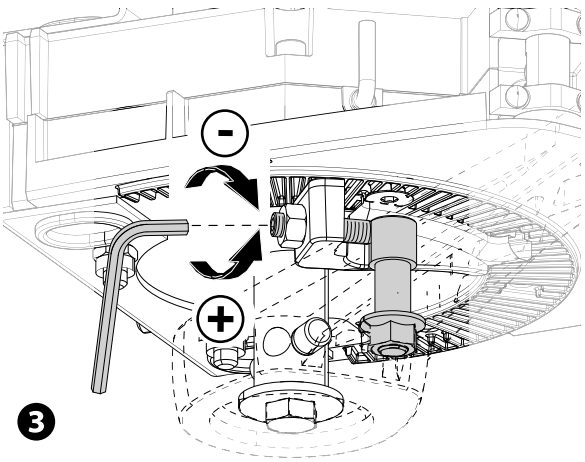

❸

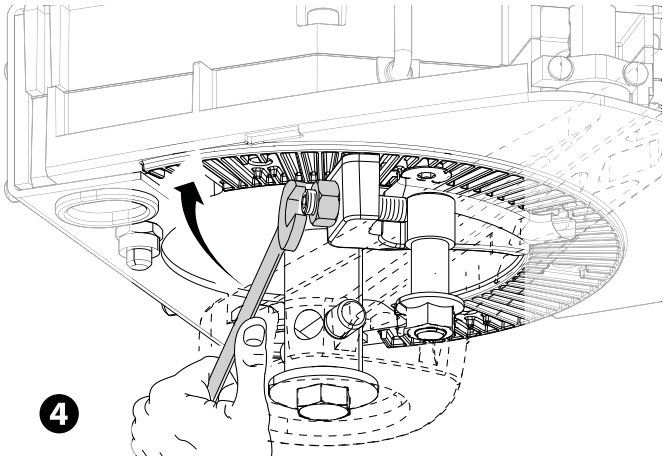

❹

ELECTRICAL CONNECTIONS AND PROGRAMMING

⚠ Warning! Before working on the control panel, cut off the main current supply and, if present, remove any batteries.

All connections are quick-fuse protected.

FUSES	ZL65
LINE - Line	2 A-F = 230 V
ACCESSORIES - Accessories	2 A-F

Description of parts

1. Terminals for signaling devices
2. Gearmotors with encoder terminals
3. Control devices terminals
4. Safety devices terminals
5. CRP connection terminals
6. Keypad selector terminal
7. Terminals for transponder devices
8. Antenna terminal
9. Module connector CONNECT GW
10. AF card connector
11. R700/R800 board connector
12. Memory Roll card connector
13. Display
14. Programming buttons
15. Connector for the RIO-CONN card
16. RSE board connector
17. Terminals for the RGP1 module
18. Accessories fuse
19. Transformer
20. Power supply terminal board
21. Line fuse
22. Housing for the CONNECT GW module
23. Housing for the RGP1 module
24. Housing for the RLB39 card

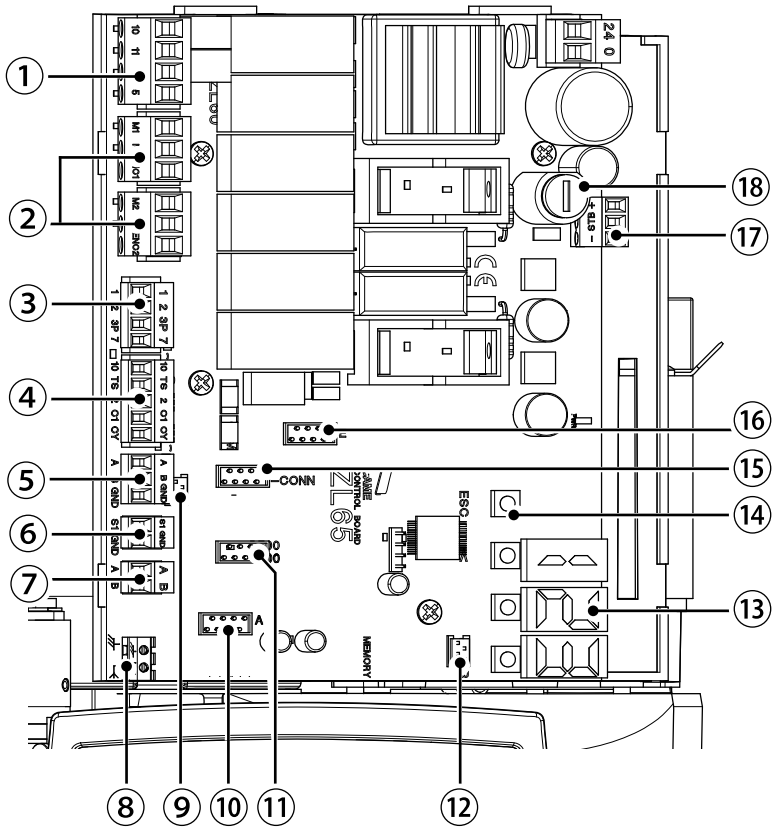

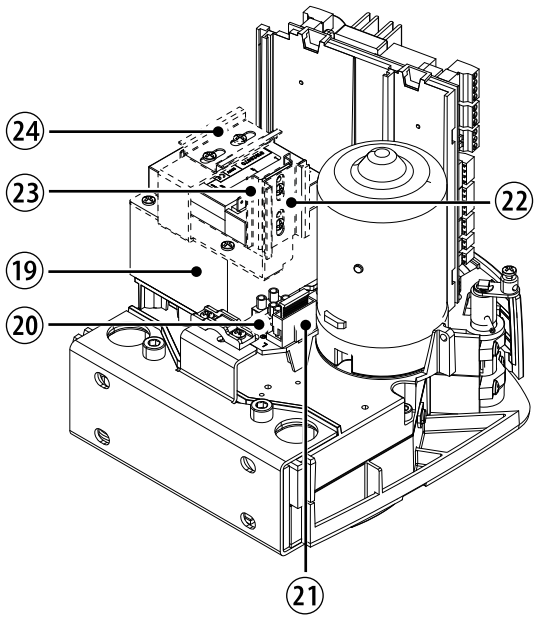

Power supply

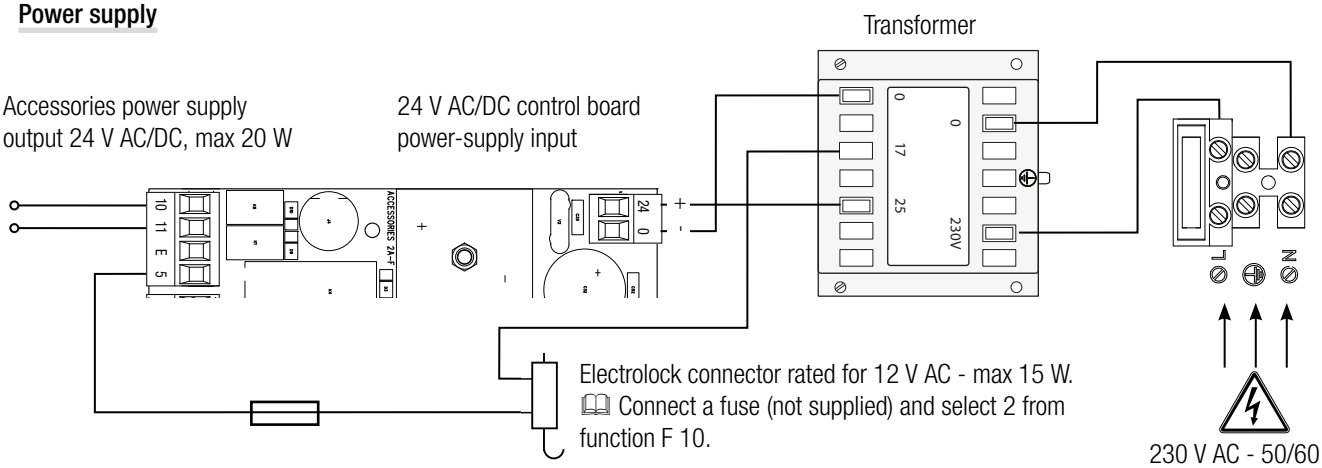

Signaling devices

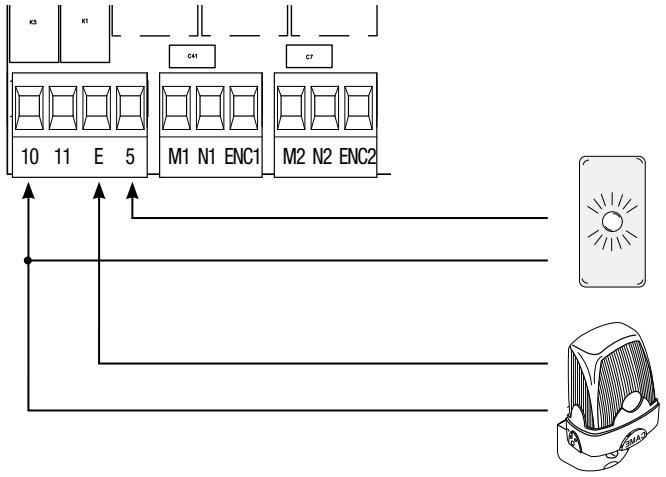

Gate-open signal output.
(Contact rated for 24 V AC/DC - 3 W max). See function F 10.

Output for connecting either flashing or cycle light.
(Contact rated for: 24 V AC/DC - 25 W max). See function F 18.

Command and control devices

WARNING! For the system to work properly, before fitting any plug-in card, such as the AF or R800 one, you MUST CUT OFF THE MAINS POWER SUPPLY and, if present, disconnect any batteries.

Connector for the CONNECT GW module.
📖 CONNECT GW does not work if it is connected to the RGP1 module or the RSE card.

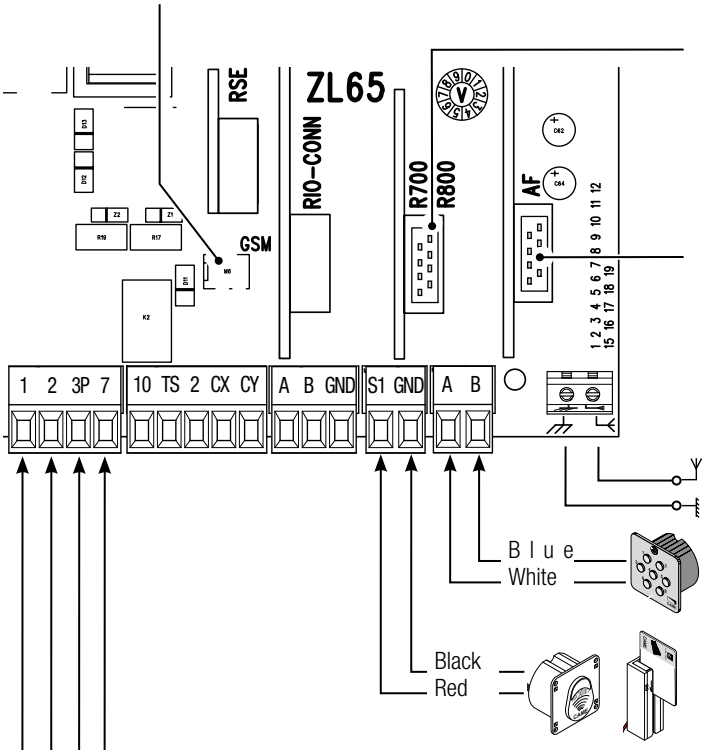

Connector for the R700 card (for using the transponder or the card reader) or for the R800 card (for using the keypad selector).

Connector for AF card (AF868 or AF43S) for remote control.

Antenna with cable RG58 for remote control.

Keypad selector.

Transponder or card reader.

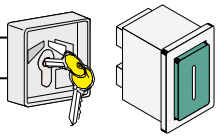

OPEN-CLOSE-INVERT function (step-step) from control device (NO contact). Alternatively, from the functions programming you can activate the single command OPEN-STOP-CLOSE-STOP (sequential). See function F7.

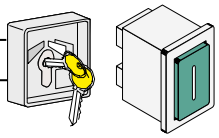

PARTIAL or PEDESTRIAN OPENING function from a control device (NO contact). See function F8.

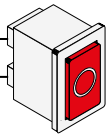

STOP button (NC contact). For stopping the gate while excluding automatic closing. To resume movement press the control button or use another control device. See function F1.

Connecting the operator

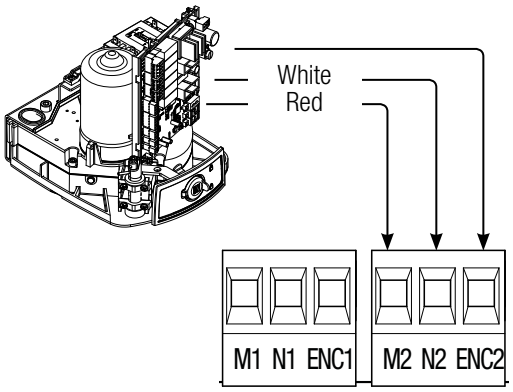

Electrical connections:
Operator installed on the left (outer view).
(Default setting)

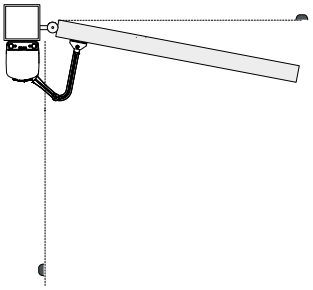

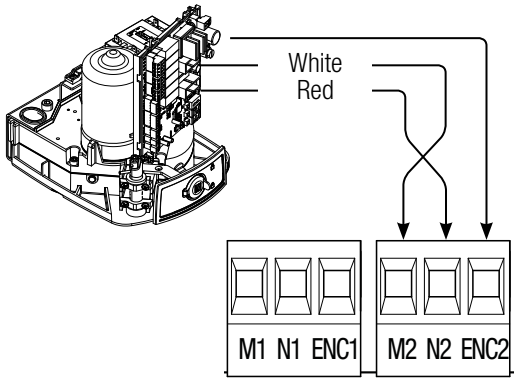

Electrical connections:
operator fitted on the right (inner view).

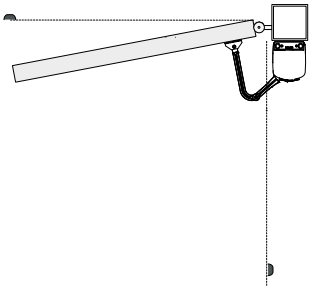

Connecting the operator and gearmotor

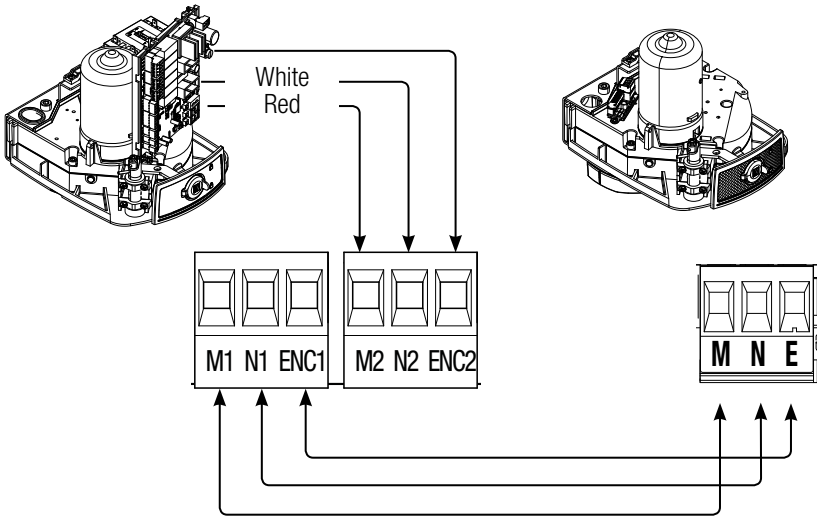

Electrical connections:
operator installed to the left and gearmotor installed to the right (inner view) with operator delayed when closing.
(Default setting)

FA7024CB **FA7024**

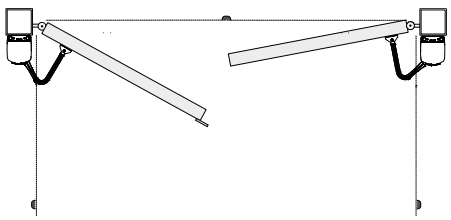

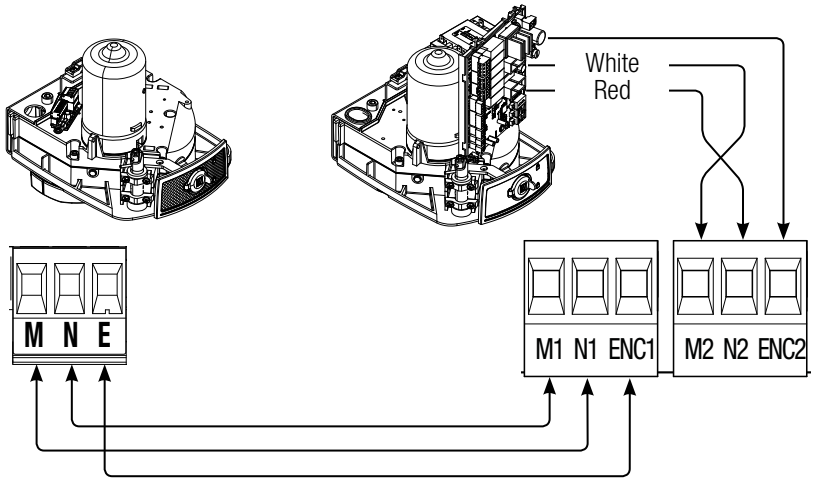

Electrical connections:
operator fitted to the right and gearmotor to the left (inner view) with operator delayed when opening.

FA7024 **FA7024CB**

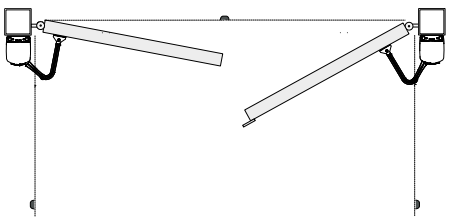

Safety devices

Photocells

Configure contact CX or CY (NC), input for safety devices, such as photocells, that comply with EN 12978 provisions.

See CX input functions (Function F2) or CY (Function F3) in:

- C1 reopening during closing. when the gate is closing, opening the contact causes the inversion of movement until opening is complete;
- C2 close back up during opening. When the gate is opening, opening the contact triggers the inversion of movement until the gate is completely closed.
- C3 partial stop. Stopping of the gate, if it is moving, with consequent automatic closing (if the automatic closing function has been entered);
- C4 obstacle wait. Gate stops, if it is moving, and once the obstruction is removed, it resumes its movement.

🕮 If contacts CX and CY are not used they should be deactivated during programming.

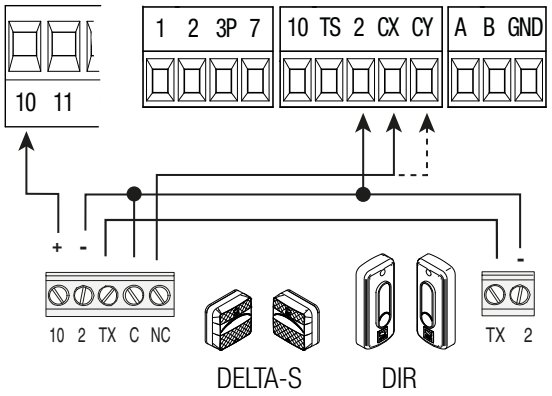

DELTA-S DIR

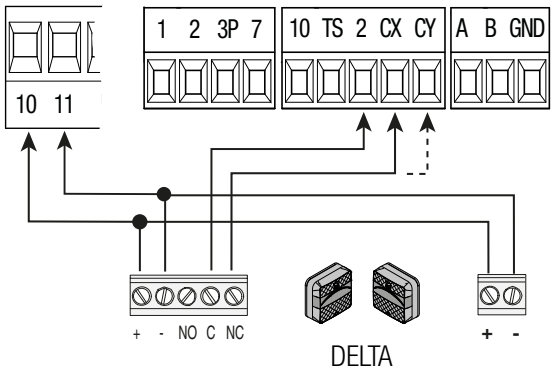

DELTA

Sensitive Safety Edges

Configure contact CX or CY (NC), input for safety devices, such as sensitive safety edges, that comply with EN 12978 provisions.

See CX input functions (Function F2) or CY (Function F3) in:

- C7 reopening during closing. when the gate is closing, opening the contact causes the inversion of movement until opening is complete;
- C8 reclosing during opening. When the gate is opening, opening the contact triggers the inversion of movement until the gate is fully closed.

🕮 If contacts CX and CY are not used they should be deactivated during programming.

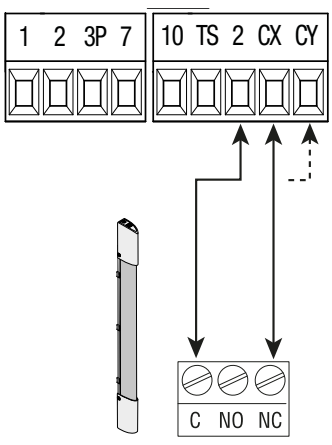

DFW

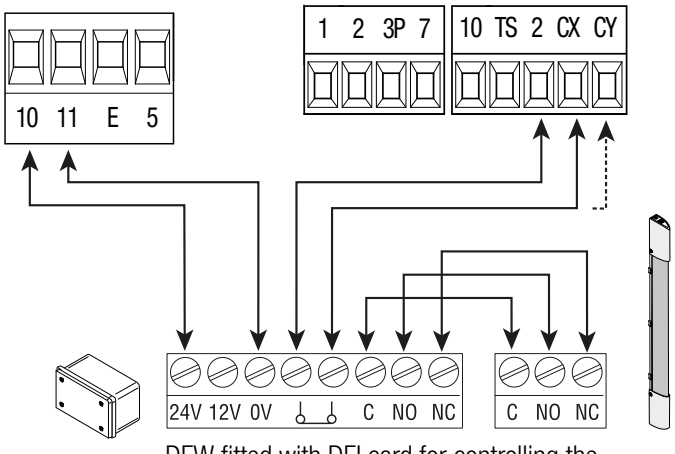

DFW fitted with DFI card for controlling the connections

Connecting the safety devices (i.e. the safety test)

At each opening and closing command, the control board checks the efficacy of the safety devices (such as, photocells).
Any malfunction will inhibit any command and E 4 will appear on the display.
For this type of connection, enable function F 5.

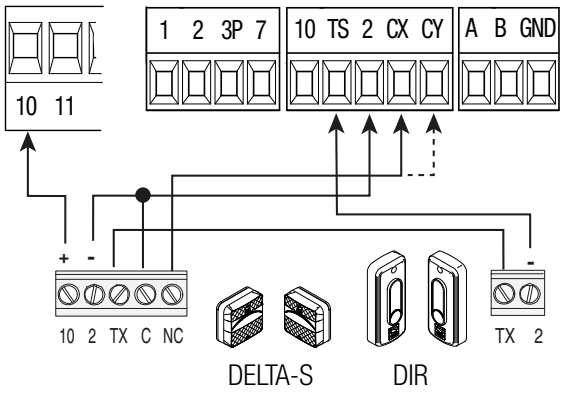

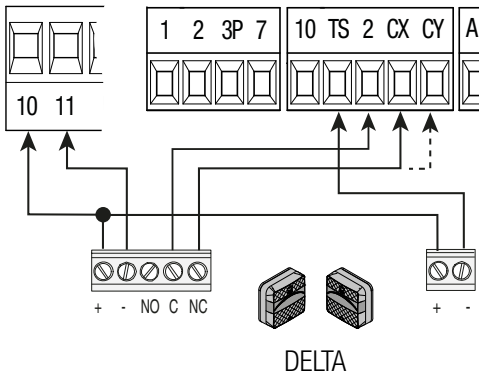

Wireless devices

Fit the RIO-CONN card into the corresponding connector on the control board.
Set the function to be associated to the wireless device (F65, F66, F67 e F68).
Configure the wireless accessories (see the folder of the accessory you want to configure).
🕮 If the devices are not configured with the RIO-CONN card, the E 18 error message is displayed.
⚠ If the system has radiofrequency interferences, the wireless system will inhibit the operator's normal operating mode and the E 17 error message is displayed.

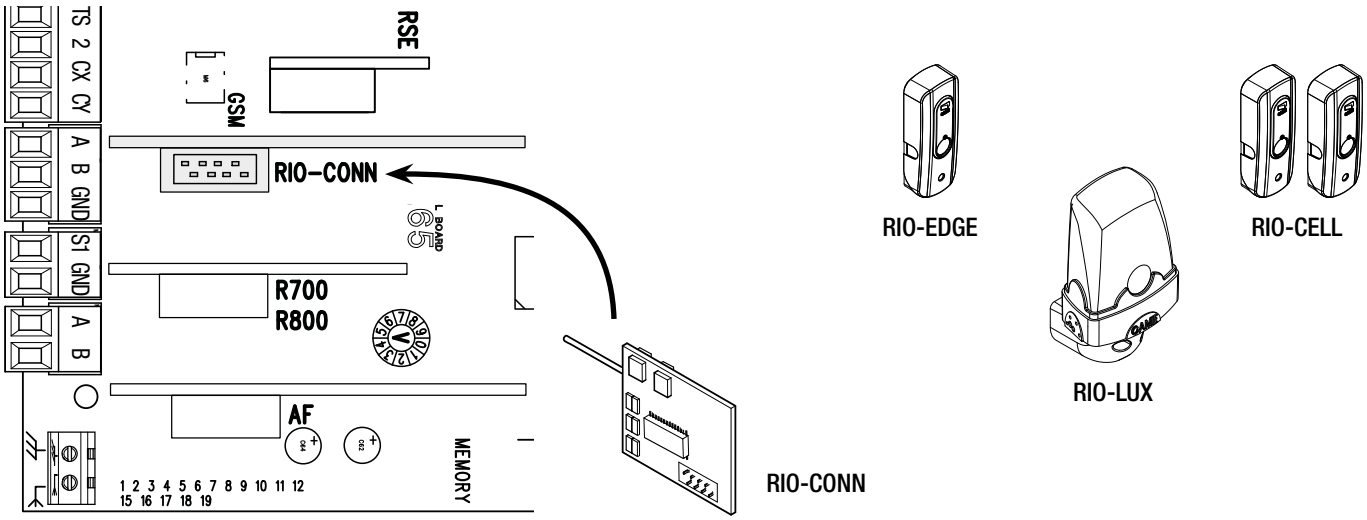

Connection with Came Remote Protocol (CRP)

Serial connection of the RS485 with RSE card to the home & building automation system via CRP (Came Remote Protocol).

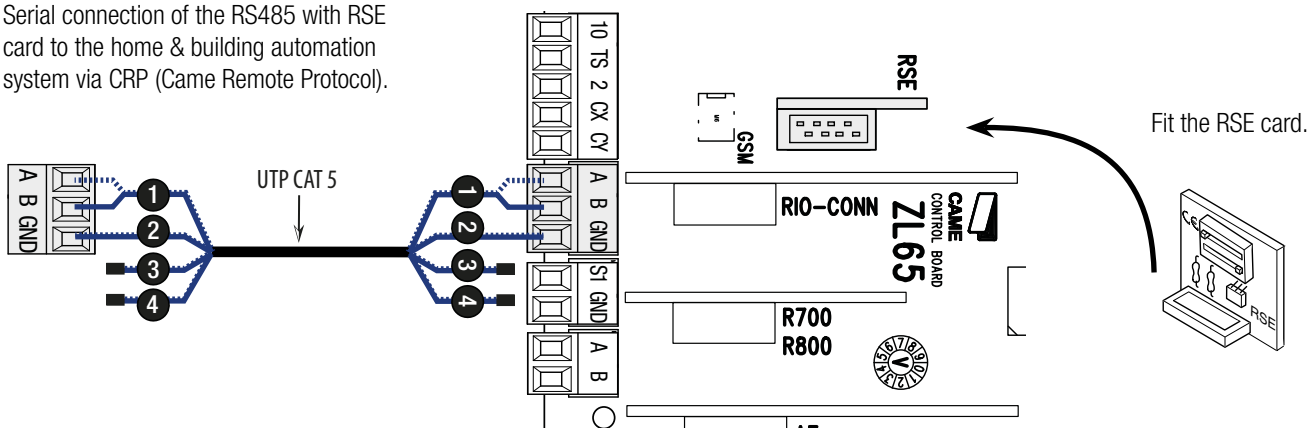

Description of programming commands

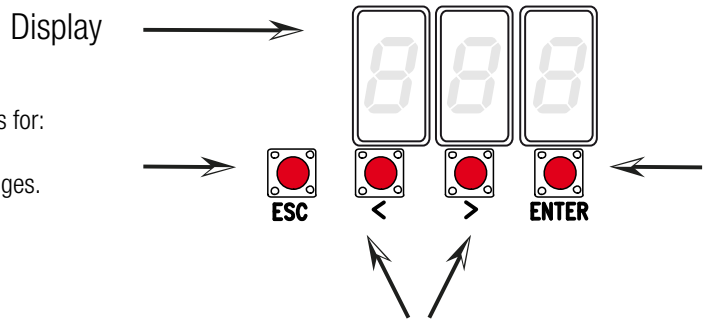

The ESC button is for:
- exiting menus;
- cancelling changes.

The ENTER key is for:
- entering menus;
- confirming or memorizing set values.

The < > keys are for:
- moving from one item to another;
- increasing or decreasing values.

Browsing the menu

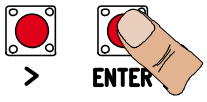

To enter the menu, keep the ENTER button pressed for at least one second.

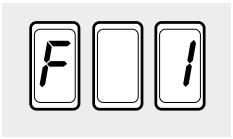

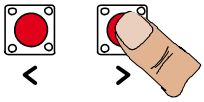

To select menu items, use the arrow keys ...

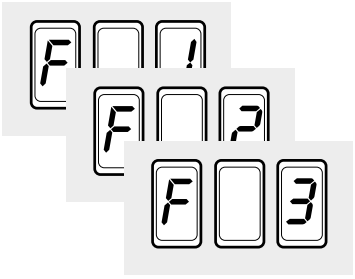

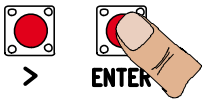

... then press ENTER

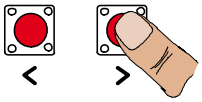

also for the submenus, use the arrow keys to select ...

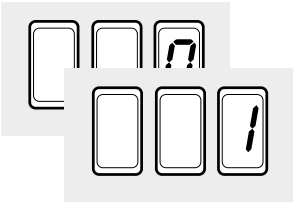

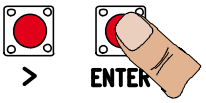

... then press ENTER

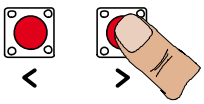

To increase or decrease a value, use the arrow keys ...

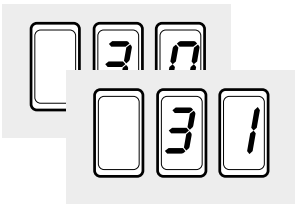

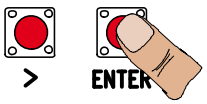

... the press ENTER to confirm ...

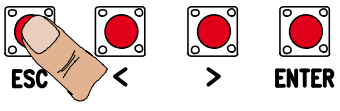

... to exit the menu, wait 10 seconds or press ESC.

When the menu is active the system cannot be used.

Functions map

F 1 Total stop function (1-2)
F 2 Function associated to input 2-CX
F 3 Function associated to input 2-CY
F 5 Safety test function
F 6 Maintained action function
F 7 Control mode on 2-7
F 8 Control mode on 2-3P
F 9 Obstruction detection with motor idle function
F 10 Function associated to the open gate signal or electric lock enabling.
F 11 Encoder exclusion
F 12 Slowed-down start function
F 13 Closing thrust function
F 14 Sensor type selection function
F 16 Ram jolt function
F 18 Additional light function
F 19 Automatic closing time
F 20 Automatic closing time after partial opening
F 21 Preflashing time
F 22 Working time
F 23 Delayed opening time
F 24 Delayed closing time
F 26 Ram jolt time
F 27 Lock time
F 28 Adjusting opening speed
F 30 Adjusting opening slow-down speed
F 33 Adjusting calibration speed
F 34 Sensitivity during movement
F 35 Sensitivity during slow-down
F 36 Adjusting partial opening
F 37 Adjusting the M1 gearmotor's opening slow-down start point
F 38 Adjusting the M1 gearmotor's closing slow-down start point
F 39 Adjusting the M1 gearmotor's opening approach starting point
F 40 Adjusting the M1 gearmotor's closing approach starting point
F 41 Adjusting the M2 gearmotor's opening slow-down starting point
F 42 Adjusting the M2 gearmotor's closing slow-down starting point
F 43 Adjusting the M2 gearmotor's opening approach starting point
F 44 Adjusting the M2 gearmotor's closing approach starting point
F 46 Setting the motor numbers
F 49 Managing the serial connection
F 50 Saving data in memory roll
F 51 Reading memory roll data
F 56 Peripheral number
F 63 Changing COM speed
F 65 Function associated to the RIO-EDGE [T1] input
F 66 Function associated to the RIO-EDGE [T2] input
F 67 Function associated to the RIO-CELL [T1] input
F 68 Function associated to the RIO-CELL [T2] input

U 1 Entering new user with an associated command
U 2 Deleting single users
U 3 Deleting all users

A 1 Motor type
A 2 Motor test
A 3 Travel calibration
A 4 Resetting parameters
A 5 Counting maneuvers

H 1 Software version

Functions menu

📖 **IMPORTANT! Start programming by first performing functions MOTOR TYPE (A1), NUMBER OF MOTORS (F46), MOTORS TEST (A2) and TRAVEL CALIBRATION (A3).**

⚠ **Programming the features is to be done when the operator is stopped.**

📖 **You can memorize up to 25 users.**

F 1 Total stop [1-2]	0 = Deactivated (**default**) / 1 = Activated
NC input – Gate stop that excludes any automatic closing; to resume movement, use the control device. The safety device is inserted into [1-2].	
F 2 Input [2-CX]	0 = Deactivated (**default**) / 1 = C1 / 2 = C2 / 3 = C3 / 4 = C4 / 7 = C7 / 8 = C8
NC input – Can associate: C1 = reopening during closing by photocells, C2 = reclosing during opening by photocells, C3 = partial stop, C4 = obstruction wait, C7 = reopening during closing by sensitive safety-edges, C8 = reclosing during opening by sensitive safety-edges. 📖 The C3 Partial stop function only appears if the F 19 Automatic closing time function is activated.	
F 3 Input [2-CY]	0 = Deactivated (**default**) / 1 = C1 / 2 = C2 / 3 = C3 / 4 = C4 / 7 = C7 / 8 = C8
NC input – Can associate: C1 = reopening during closing by photocells, C2 = reclosing during opening by photocells, C3 = partial stop, C4 = obstruction wait, C7 = reopening during closing by sensitive safety-edges, C8 = reclosing during opening by sensitive safety-edges. 📖 The C3 Partial stop function only appears if the F 19 Automatic closing time function is activated.	
F 5 Safety test	0 = Deactivated (**default**) / 1 = CX / 2 = CY / 4 = CX+CY
After every opening or closing command, the board will check whether the photocells are working properly. 📖 The safety test is always active for wireless devices.	
F 6 Maintained action	0 = Deactivated (**default**) / 1 = Activated
The gate opens and closes by keeping the button pressed. Opening button on contact 2-3P and closing button on contact 2-7. All other control devices, even radio-based ones, are excluded.	
F 7 Command [2-7]	0 = Step-step (**default**) / 1 = Sequential
From the control device connected to 2-7 it performs the step-step (open-close-invert) or sequential (open-stop-close-stop) command.	
F 8 Command [2-3P]	0 = Pedestrian opening (**default**) / 1 = Partial opening
From the control device connected to 2-3P, it performs the pedestrian opening (completely opened M2 leaf) or the partial opening (partially opened 2 leaf): the degree of opening depends on the travel percentage adjustment set with F 36).	
F 9 Obstruction detection when motor is idle	0 = Deactivated (**default**) / 1 = Activated
With the gate closed, opened or totally stopped, the gearmotor stays idle if the safety devices, that is, photocells or sensitive safety-edges detect an obstruction.	
F 10 Open-gate signal or electric lock enabling	0 = lit when gate is open or moving (**default**) / 1 = when opening it flashes intermittently every half-second, when closing it flashes intermittently every second, stays lit when gate is open stays off when gate is closed / 2 = enabled electric lock.
It signals the gate status. The signaling device is connected to 10-5 or, alternatively, it enables the electric lock connected to transformer's 17 V-output and to terminal 5. 📖 In the latter case, connect a 3.15 A fuse.	
F 11 Encoder	0 = Activated (**default**) / 1 = Deactivated
Managing slow-downs, obstruction detections and sensitivity.	
F 12 Slowed-down start	0 = Deactivated (**default**) / 1 = Activated
With each opening and closing command, the gate starts moving slowly for a few seconds.	
F 13 Closing thrust	0 = deactivated (**default**) / 1 = minimum thrust / 2 = medium thrust / 3 = maximum thrust
At the closing limit switch, the gearmotors make the leaves perform a brief closing thrust.	
F 14 Select sensor type	0 = transponder sensor or magnetic card reader command 1 = command with keypad selector (**default**)
Setting the type of sensor for controlling the operator.	
F 16 Ramming jolt	0 = Deactivated (**default**) / 1 = Activated
Before every opening or closing maneuver, the leaves thrust inwards to release the electric lock. The thrust time, is set with F 26.	
F 18 Extra light	0 = Flashing (**default**) / 1 = Cycle
Output on contact 10-E. Flashing light: it flashes during the gate's opening and closing phases. Cycle: it stays lit from the beginning of the opening until complete closing, including the waiting time before the automatic closing.	

F 19 Automatic closing time	0 = Deactivated (**default**) / 1 = 1 second /… / 180 = 180 seconds
The automatic-closing wait starts when the opening limit switch point is reached and can be set to between 1 and 180 seconds. The automatic closing does not turn on if any of the safety devices trigger when an obstruction is detected, after a total stop or during a power outage.	
F 20 Automatic closing time after partial opening	0 = Deactivated (**default**) / 1 = 1 second /… / 180 = 180 seconds
The wait before the automatic closing starts after a partial opening command for an adjustable time of between 1 s and 180 s. The automatic closing does not turn on if any of the safety devices trigger when an obstruction is detected, after a total stop or during a power outage.	
F 21 Preflashing time	0 = Deactivated (**default**) / 1 = 1 second /… / 10 = 10 seconds
Adjusting the pre-flashing time for the flashing light connected to 10-E before each maneuver. The flashing time is adjustable from one to ten seconds.	
F 22 Working time	5 = 5 seconds /… / 120 = 120 seconds (**default)** /… / 180 = 180 seconds.
Motors working time, when opening and closing. Adjustable between five and 180 seconds.	
F 23 Delayed opening time	0 = 0 seconds /… / 2 = 2 seconds (**default**) /… / 10 = 10 seconds.
After an opening command, the M1 gearmotor starts delayed. The delay time is adjustable between one and two seconds.	
F 24 Delayed closing time	0 = 0 seconds/… / 5 = 5 seconds (**default**) /… / 25 = 25 seconds.
After either a closing command or an automatic closing, the M2 gearmotor starts delayed. The delay time is adjustable between one and five seconds.	
F 26 Ram jolt time	1 = 1 second (**default**) / 2 = 2 seconds
After an opening or closing command, the gearmotor thrusts inward for an adjustable time between one and two seconds.	
F 27 Lock time	1 = 1 second (**default**) / 4 = 4 seconds
After an opening or closing command, the electric lock releases for an adjustable time between one and four seconds.	
F 28 Travel speed	60 = Minimum speed /… / 100 = Maximum speed**default**)
Setting the gate's opening and closing speeds, calculated as a percentage. 🕮 For FA7024CB gearmotors, the minimum speed is 50.	
F 30 Slow-down speed	10 = Minimum speed /… / 50 = Speed (**default**) /... / 60 = Maximum speed
Setting the gate's opening and closing slow-down speed, calculated as a percentage. 🕮 For FA7024CB gearmotors, the minimum speed is 30.	
F 33 Calibration speed	20 = Minimum speed /… / 50 = Speed (**default**) /... / 60 = Maximum speed
Setting the gearmotors' speeds during calibration, calculated as a percentage.	
F 34 Travel sensitivity	10 = sensitivity /… / 100 = minimum sensitivity (**default**)
Adjusting obstruction detection sensitivity during boom travel.	
F 35 Slow-down speed	10 = sensitivity /… / 100 = minimum sensitivity (**default**)
Adjusting the obstruction-detection sensitivity during slow-downs	
F 36 Adjusting partial opening	10 = 10% of the travel /… / 40 = 40% of the travel (**default**) /... / 80 = 80% of the travel
Adjustment as a percentage of total travel, during gate opening.	
F 37 M1 slow-down starting point	10 = 10% of the travel /… / 25 = 25% of the travel (***default***) /… / 70 = 70% of the travel
Adjusting as a percentage of the total travel, the opening slow-down starting point of motor M1. 🕮 This function only appears if the Encoder function is activated.	
F 38 M1 closing slow-down point	10 = 10% of the travel /… / 25 = 25% of the travel (**default**) /… / 60 = 60% of the travel
Adjusting as a percentage of the total travel, the closing slow-down starting point of motor M1. 🕮 This function only appears if the Encoder function is activated.	
F 39 M1 opening approach point	1 = 1% of the travel /… / 10 = 10% of the travel (**default**)
Adjusting as a percentage of the total travel, the M1 motor's opening approach starting point. 🕮 This function only appears if the Encoder function is activated.	
F 40 M1 closing approach point	1 = 1% of the travel /… / 10 = 10% of the travel (**default**)
Adjusting as a percentage of the total travel, the M1 motor's closing-approach starting point. 🕮 This function only appears if the Encoder function is activated.	

F 41 M2 motor's opening slow-down point	10 = 10% of the travel / … / 25 = 25% of the travel (***default***) / … / 60 = 60% of the travel
Adjusting as a percentage of the total travel, the M2 motor's opening slow-down starting point. 🕮 This function only appears if the Encoder function is activated.	
F 42 M2 motor's closing slow-down point	10 = 10% of the travel / … / 25 = 25% of the travel (***default***) / … / 60 = 60% of the travel
Adjusting as a percentage of the total travel, the M2 motor's closing slow-down starting point. 🕮 This function only appears if the Encoder function is activated.	
F 43 M2 motor's opening approach point	1 = 1% of the travel /… / 10 = 10% of the travel (**default**)
Adjusting as a percentage of the total travel, of the M2 motor's opening approach starting point. 🕮 This function only appears if the Encoder function is activated.	
F 44 M2's closing approach point	1 = 1% of the travel /… / 10 = 10% of the travel (**default**)
Adjusting as a percentage of the total travel, the M2 motor's closing approach starting point. 🕮 This function only appears if the Encoder function is activated.	
F 46 Number of motors	0 = M1 and M2 (**default**) / 1 = M2
For setting the number of motors connected to the control panel.	
F 49 Managing the serial connection	0 = Deactivated (**default**) / 3 = CRP
To enable functioning of the Came Remote Protocol.	
F 50 Saving data	0 = Deactivated (**default**) / 1 = Activated
Saving users and saved settings in memory roll. 🕮 This feature only appears if a memory roll has been fitted into the control board.	
F 51 Read data	0 = Deactivated (**default**) / 1 = Activated
Uploading data saved in memory roll. 🕮 This feature only appears if a memory roll has been fitted into the control board.	
F 56 Peripheral number	1 ----> 225
To set the peripheral's number from 1 to 255 for each control board when you have a system with several operators.	
F 63 Changing COM speed	0 = 1200 Baud / 1 = 2400 Baud / 2 = 4800 Baud / 3 = 9600 Baud / 4 = 14400 Baud / 5 = 19200 Baud / 6 = 38400 Baud / 7 = 57600 Baud / 8 = 115200 Baud
For setting the communication speed used in the CRP (Came Remote Protocol) connection system.	
F 65 Wireless input RIO-EDGE [T1]	0 = Deactivated (**default**) / 7 = P7 / 8 = P8
RIO-EDGE wireless safety device associated to any function chosen among those available: P7 = reopening during closing, P8 = reclosing during opening. For programming, see the instructions that come with the accessory. 🕮 This function only appears is the control board has been fitted with a RIO-CONN card.	
F 66 Wireless input RIO-EDGE [T2]	0 = Deactivated (**default**) / 7 = P7 / 8 = P8
RIO-EDGE wireless safety device associated to any function chosen among those available: P7 = reopening during closing, P8 = reclosing during opening. For programming, see the instructions that come with the accessory. 🕮 This function only appears is the control board has been fitted with a RIO-CONN card.	
F 67 Wireless input RIO-CELL [T1]	0 = Deactivated (**default**) / 1 = P1 / 2 = P2 / 3 = P3 / 4 = P4
RIO-CELL is associated to any function chosen among those available: P1 = reopening during closing; P2 = reclosing during opening; P3 = partial stop; P4 = obstruction wait. For programming, see the instructions that come with the accessory. 🕮 This function only appears is the control board has been fitted with a RIO-CONN card.	
F 68 Wireless input RIO-CELL [T2]	0 = Deactivated (**default**) / 1 = P1 / 2 = P2 / 3 = P3 / 4 = P4
RIO-CELL is associated to any function chosen among those available: P1 = reopening during closing; P2 = reclosing during opening; P3 = partial stop; P4 = obstruction wait. For programming, see the instructions that come with the accessory. 🕮 This function only appears is the control board has been fitted with a RIO-CONN card.	

U 1 Entering a user	1 = Step-step command (open-close) / 2 = Sequential command (open-stop-close-stop) / 3 = Only open command / 4 = Partial command
Entering up to up to a 25 users maximum and associating to each one a function chosen among the existing ones. This must be done via transmitter or other control device (see "ENTERING USERS WITH ASSOCIATED COMMAND paragraph).	
U 2 Deleting a user	
Deleting a single user	
U 3 Deleting users	0 = Deactivated / 1 = Deleting all users
Deleting all users.	
A 1 Motor type	1 = SWN20 - SWN25 (**default**) / 2 = FA7024CB
Selecting the gearmotor used on the system.	
A 2 Motors test	0 = Disable / 1 = Activate
Test for checking the gearmotors' proper rotating directions (see the MOTORS TEST paragraph).	
A 3 Travel calibration	0 = Disable / 1 = Activate
Automatic calibration of the gate-leaf run (see the TRAVEL CALIBRATION paragraph). 🕮 This function appears only is the Encoder function is activated.	
A 4 Resetting parameters	0 = Disable / 1 = Activate
Warning! The default settings are restored and the travel calibration deleted.	
A 5 Counting maneuvers	0 = Number of maneuvers made / 1 = Deleting all maneuvers
For viewing the number of maneuvers completed or for deleting them (001 = 100 maneuvers; 010 = 1,000 maneuvers; 100 = 10,000 maneuvers; 999 = 99,900 maneuvers; CSI = maintenance job)	
H 1 Version	
View the firmware version.	

Motors test

Select A 2.
Press ENTER to confirm.

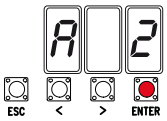

Select 1 and press ENTER to confirm the motors test procedure.

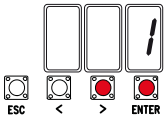

The following [---] characters will be displayed while waiting for a command.

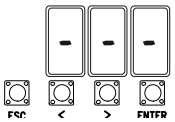

Keep pressed the > key and check whether the M2 second gearmotor's leaf performs an opening maneuver.
🕮 If the leaf performs an opening maneuver, invert the motor's phases.

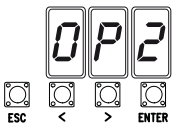

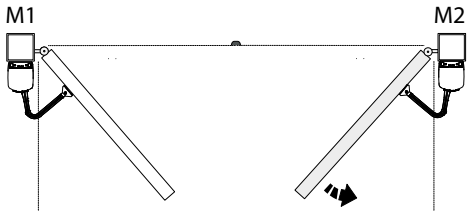

Perform the same procedure using the < arrow key to check the M1 first gearmotor's leaf.
🕮 If the leaf performs an opening maneuver, invert the motor's phases.

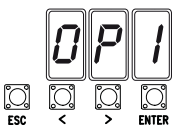

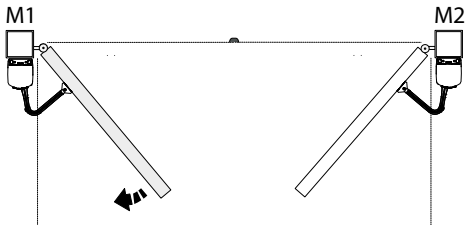

Travel calibration

🕮 Before calibrating the gate travel, position the gate half-way, check that the maneuvering area is clear of any obstruction and check that there are mechanical opening and closing stops.

⚠ The mechanical end-stops are obligatory.

Important! During calibration, all safety devices will be disabled.

Select A 3.
Press ENTER to confirm.

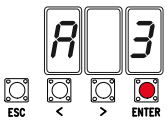

Select 1 and press ENTER to confirm the travel calibration operation.

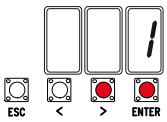

The first gearmotor leaf will perform a closing maneuver until the closing strike ...

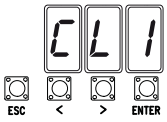

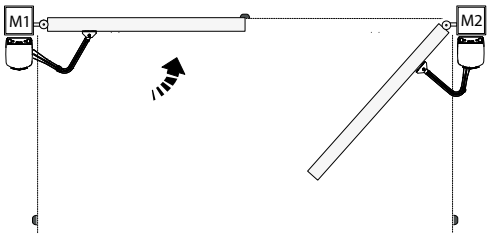

... then, the second gearmotor leaf will perform the same maneuver ...

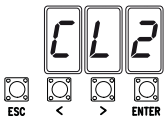

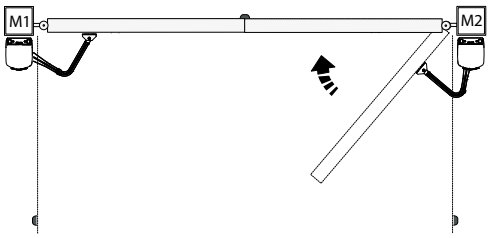

... the the second gearmotor's leaf will perform an opening maneuver until the closing strike ...

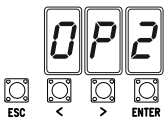

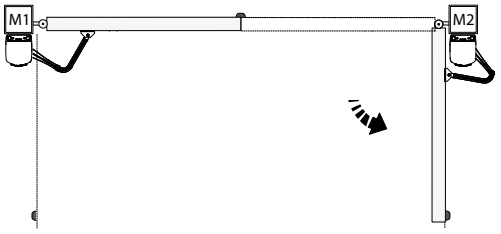

... the first gearmotor's leaf will perform the same maneuver.

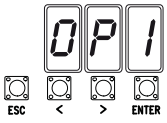

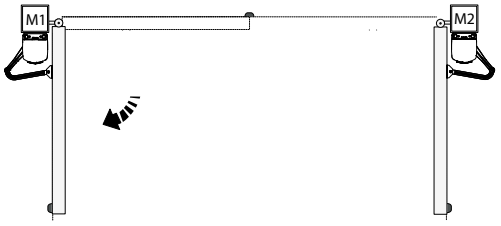

📖 When entering/deleting users, the flashing numbers that appear, are numbers that can be used for other users you may wish to enter (maximum 25 users).

Entering a user with an associated command

Select U 1
Press ENTER to confirm.

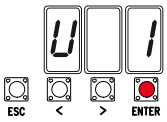

Select a command to associate to the user.
The commands are:
- step-step (open-close) = 1;
- sequential (open-stop-close-stop) = 2;
- open = 3;
- partial opening/pedestrian = 4.

Press ENTER to confirm...

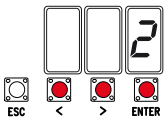

... a number from 1 to 25 will flash for a few seconds
Send the code from the transmitter or other control device, such as, a keypad selector or a transponder.
Associate the number to the entered user.

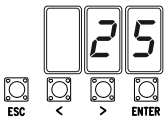



User	Associated command
1 -	
2 -	
3 -	
4 -	
5 -	
6 -	
7 -	
8 -	
9 -	
10 -	
11 -	
12 -	
13 -	
14 -	
15 -	
16 -	
17 -	
18 -	
19 -	
20 -	
21 -	
22 -	
23 -	
24 -	
25 -	

Deleting a single user

Select U 2.
Press ENTER to confirm.

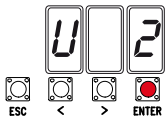

Use the arrow keys select the number of the user you wish to delete.
Press ENTER to confirm...

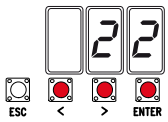

... Clr will appear on the screen to confirm deletion.

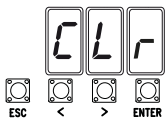

Memory Roll Card

To memorize user data and configure the system, to then reuse them with another control board even on another system.
📖 After memorizing the data, it is best to remove the Memory roll.

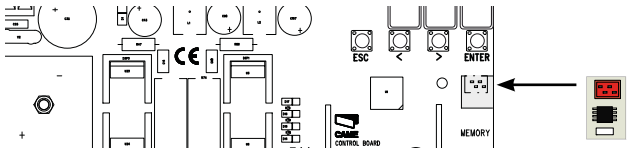

Memory roll.

ILLUSTRATION OF THE SLOW-DOWN AND APPROACH AREAS AND POINTS

📖 The travel areas and slow-down and approach points are tested to comply with the parameters set forth by Technical Regulations EN 12445 and EN 12453 for impact force compatibility of moving gate leaves.

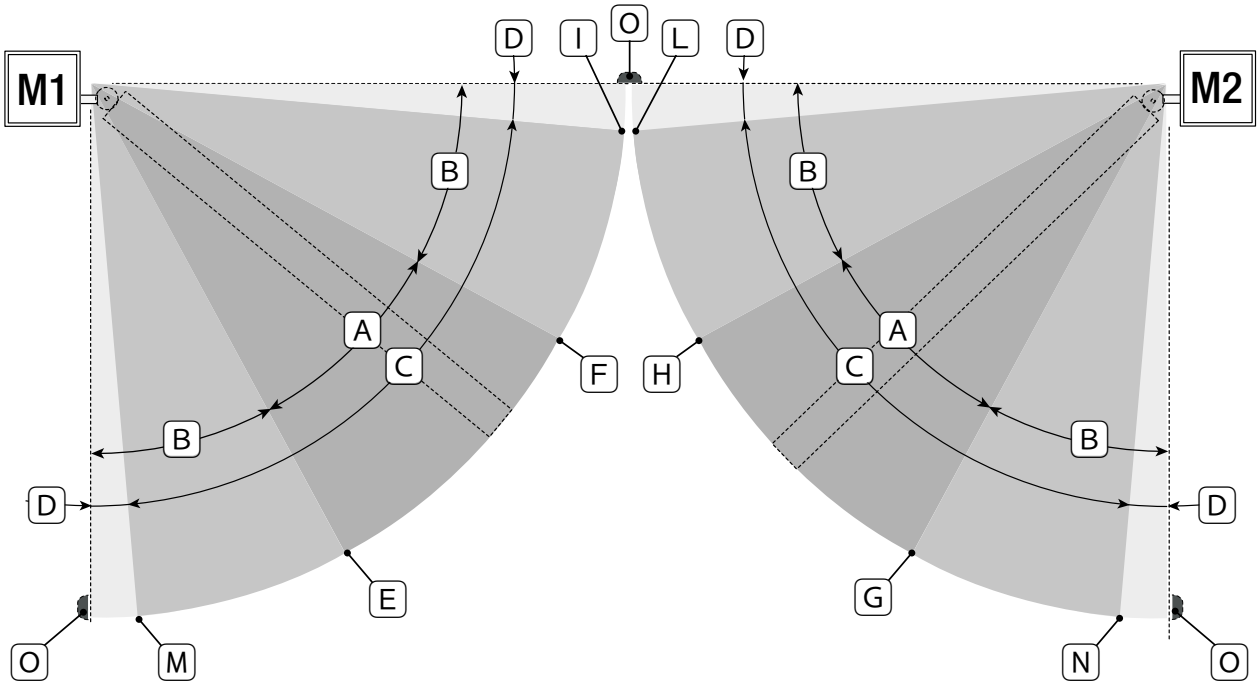

A = Movement area at normal speed.
B* = Movement area at slowed-down speed.
C = Encoder intervention zone with movement inversion.
D = Encoder intervention zone with movement stopped.
E = Opening slow-down starting point for M1.
F = Closing slow-down starting point for M1.
G = Opening slow-down starting point for M2.
H = Closing slow-down starting point for M2.
I** = Closing approach starting point for M1.
L** = Closing approach starting point for M2.
M** = Opening slow-down starting point for M1.
N** = Opening slow-down starting point for M1
O = Strike plates..

* Minimum 600 mm from the strike plate.
** Set the closing-rest percentage for function F 39 - F 40 for the first motor (M1) and F43 - F44 for the second motor (M2) so as to achieve a distance of less than 50 mm from the strike plate.

FINAL OPERATIONS

Once you have finished with the connections and started up the operator, fit the casing over the gearmotor (❶).
Fit the casing over the gearmotor and close the hatch (❷).
Lock the gearmotor using the key and fit the protection cap (❸).

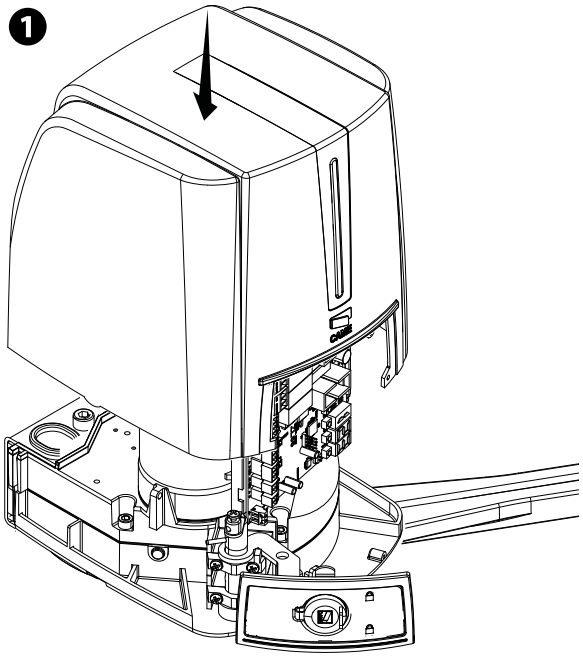

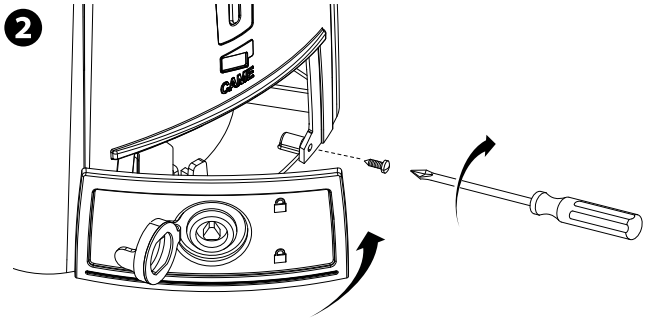

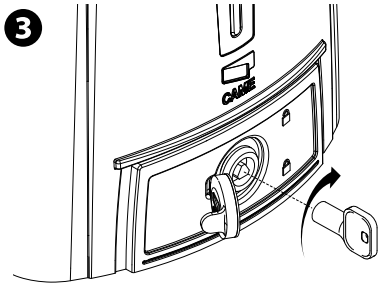

RELEASING THE GEARMOTOR

⚠ This procedure must be done with the main power cut off.
⚠ Manually releasing the operator may result in uncontrolled movement of the gate, if this has any mechanical problems or is unbalanced.

RELEASE

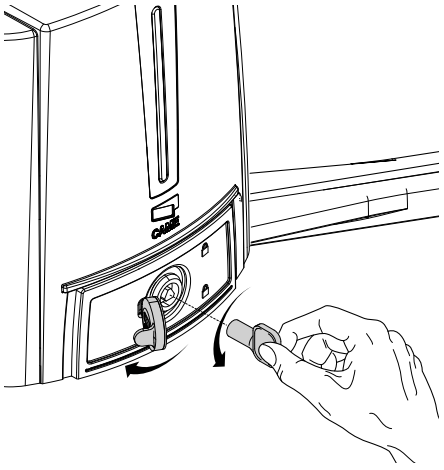

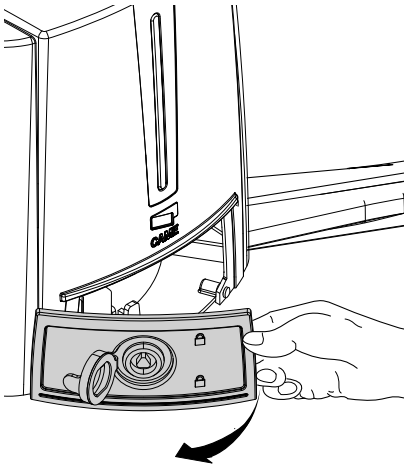

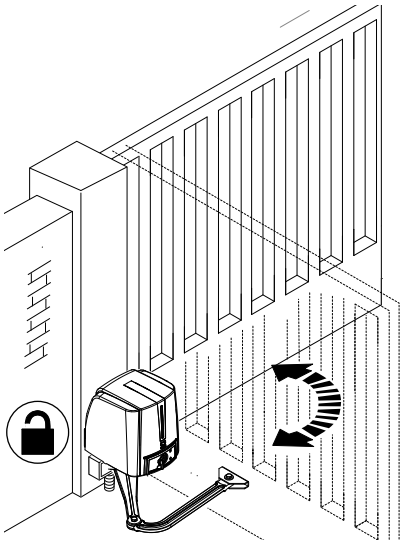

LOCK

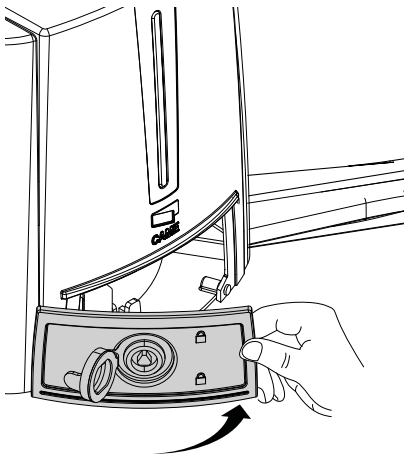

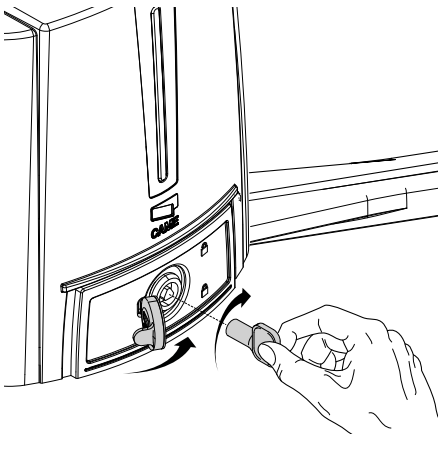

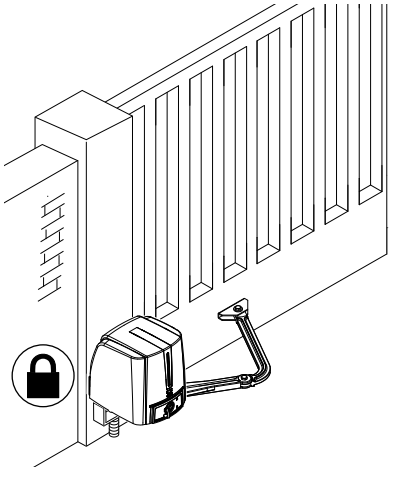

ERROR MESSAGE

🕮 The error messages are shown on the display.

E 1	The travel calibration was interrupted when the STOP button was activated
E 2	Calibrating the incomplete travel
E 3	Encoder broken
E 4	Services test error
E 7	Insufficient working time
E 9	Closing obstruction
E 10	Opening obstruction
E 11	Maximum number of detected obstructions
E 14	Serial communication error
E 17	Wireless system error
E 18	The wireless system hasn't been configured.

MAINTENANCE

Periodic maintenance

☞ Before doing any maintenance, cut off the power supply, to prevent any hazardous situations caused by accidentally activating the operator.

Periodic maintenance log kept by users (every six months)

Date	Notes	Signature

Extraordinary maintenance

⚠ The following table is for logging any extraordinary maintenance jobs, repairs and improvements performed by specialized contractors.
🕮 Any extraordinary maintenance jobs must be done only by specialized technicians.

Extraordinary maintenance log

Fitter's stamp	Name of operator
	Job performed on (date)
	Technician's signature
	Requester's signature
Job performed _____	

Fitter's stamp	Name of operator
	Job performed on (date)
	Technician's signature
	Requester's signature
Job performed _____	

Fitter's stamp	Name of operator
	Job performed on (date)
	Technician's signature
	Requester's signature
Job performed _____	

DISMANTLING AND DISPOSAL

☞ CAME S.p.A. applies a certified Environmental Management System at its premises, which is compliant with the UNI EN ISO 14001 standard to ensure the environment is safeguarded.
Please continue safeguarding the environment. At CAME we consider it one of the fundamentals of our operating and market strategies. Simply follow these brief disposal guidelines:
♻ DISPOSING OF THE PACKAGING
The packaging materials (cardboard, plastic, and so on) should be disposed of as solid urban waste, and simply separated from other waste for recycling.
Always make sure you comply with local laws before dismantling and disposing of the product.
DO NOT DISPOSE OF IN NATURE!
♻ DISMANTLING AND DISPOSAL
Our products are made of various materials. Most of these (aluminum, plastic, iron, electrical cables) is classified as solid household waste. They can be recycled by separating them before dumping at authorized city plants.
Whereas other components (control boards, batteries, transmitters, and so on) may contain hazardous pollutants.
These must therefore be disposed of by authorized, certified professional services.
Before disposing, it is always advisable to check with the specific laws that apply in your area.
DO NOT DISPOSE OF IN NATURE!

DECLARATION OF CONFORMITY

Declaration CE - Came S.p.A. declares that this device conforms to the essential, pertinent requirements provided by directives 2006/42/CE, 2006/95/CE and 2004/108/CE.

An original copy of the declaration of conformity is available on request.

English *- Manual code:* ***FA00095-EN*** *v.* ***2*** *- 12/2015 -* *© Came S.p.A. The contents of this manual may be changed at any time without prior notice.*

CAME
safety&comfort

CAME URBACO bpt DOMICILED
CAME parkare 3P

Came S.p.A.

Via Martiri Della Libertà, 15
31030 **Dosson di Casier**
Treviso - Italy
(+39) 0422 4940
(+39) 0422 4941

Via Cornia, 1/b - 1/c
33079 **Sesto al Reghena**
Pordenone - Italy
(+39) 0434 698111
(+39) 0434 698434

www. came.com