CAME

119DU20EN

AUTOMATION FOR SWING GATES

Official Partner
EXPO
MILANO 2015
FEEDING THE PLANET
ENERGY FOR LIFE



INSTALLATION MANUAL

A1824

English EN

www.metalines.com Polydon Industries Ltd, Polydon Park, Radiance Road, Doncaster, South Yorkshire DN1 2TE | Tel: 01302 327172 | Fax: 01302 380124 sales@metalines.com

WARNING!
important safety instructions for people:
READ CAREFULLY!

ENGLISH

Premise

• Employ this product only for the use for which it was expressly made. Any other use is dangerous. CAME S.p.A. is not liable for any damage caused by improper, wrongful and unreasonable use • Keep these warnings together with the installation and operation manuals that come with the operator.

Before installing

(checking what's there: if your evaluation is negative, do not proceed before having complied with all safety requirements)

• Check that the automated parts are in good mechanical order, that the operator is level and aligned, and that it opens and closes properly. Make sure you have suitable mechanical stops • If the operator is to be installed at a height of over 2.5 m from the ground or other access level, make sure you have any necessary protections and/or warnings in place • If any pedestrian openings are fitted into the operator, there must also be a a system to block their opening while they are moving • Make sure that the opening automated door or gate cannot entrap people against the fixed parts of the operator • Do not install the operator upside down or onto elements that could yield and bend. If necessary, add suitable reinforcements to the anchoring points • Do not install door or gate leaves on tilted surfaces • Make sure any sprinkler systems cannot wet the operator from the ground up • Make sure the temperature range shown on the product literature is suitable to the climate where it will be installed • Follow all instructions as improper installation may result in serious bodily injury • It is important to follow these instructions for the safety of people. Keep these instructions.

Installing

• Suitably section off and demarcate the entire installation site to prevent unauthorized persons from entering the area, especially minors and children • Be careful when handling operators that weigh over 20 kg. If need be, use proper safety hoisting equipment • All opening commands (that is, buttons, key switches, magnetic readers, and so on) must be installed at least 1.85 m from the perimeter of the gate's working area, or where they cannot be reached from outside the gate. Also, any direct commands (buttons, touch panels, and so on) must be installed at least 1.5 m from the ground and must not be reachable by unauthorized persons • All maintained action commands, must be fitted in places from which the moving gate leaves and transit and driving areas are visible • Apply, if missing, a permanent sign showing the position of the release device • Before delivering to the users, make sure the system is EN 12453 standard compliant (regarding impact forces), and also make sure the system has been properly adjusted and that any safety, protection and manual release devices are working properly • Apply Warning Signs (such as the gate's plate) where necessary and in a visible place

Special user-instructions and recommendations

• Keep gate operation areas clean and free of any obstructions. Make sure that the photocells are free of any overgrown vegetation and that the operator's area of operation is free of any obstructions • Do not allow children to play with fixed commands, or to loiter in the gate's maneuvering area. Keep any remote control transmitters or any other command device away from children, to prevent the operator from being accidentally activated. • The apparatus may be used by children of eight years and above and by physically, mentally and sensorially challenged people, or even ones without any experience, provided this happens under close supervision or once they have been properly instructed to use the apparatus safely and about the potential hazards involved. Children must not play with the apparatus. Cleaning and maintenance by users must not be done by children, unless properly supervised • Frequently check the system for any malfunctions or signs of wear and tear or damage to the moving structures, to the component parts, all anchoring points, including cables and any accessible connections. Keep any hinges, moving joints and slide rails properly lubricated • Perform functional checks on the photocells and sensitive safety edges, every six months. To check whether the photocells are working, wave an object in front of them while the gate is closing; if the operator inverts its direction of travel or suddenly stops, the photocells are working properly. This is the only maintenance operation to do with the power on. Constantly clean the photocells' glass covers using a slightly water-moistened cloth; do not use any solvents or other chemical products that may ruin the devices • If repairs or modifications are required to the system, release the operator and do not use it until safety conditions have been restored • Cut off the power supply before releasing the operator for manual openings and before any other operation, to prevent potentially hazardous situations. Read the instructions • If the power supply cable is damaged, it must be replaced by the manufacturer or authorized technical assistance service, or in any case, by similarly qualified persons, to prevent any risk • It is FORBIDDEN for users to perform any OPERATIONS THAT ARE NOT EXPRESSLY REQUIRED OF THEM AND WHICH ARE NOT LISTED in the manuals. For any repairs, modifications and adjustments and for extraordinary maintenance, CALL TECHNICAL ASSISTANCE • Log the job and checks into the periodic maintenance log.

Additional special recommendations for everyone

• Keep away from hinges and mechanical moving parts • Do not enter the operator's area of operation when it is moving • Do not counter the operator's movement as this could result in dangerous situations • Always pay special attention to any dangerous points, which have to be labeled with specific pictograms and/or black and yellow stripes • While using a selector switch or a command in maintained actions, keep checking that there are no persons within the operating range of any moving parts, until the command is released • The gate may move at any time and without warning • Always cut off the power supply before performing any maintenance or cleaning.

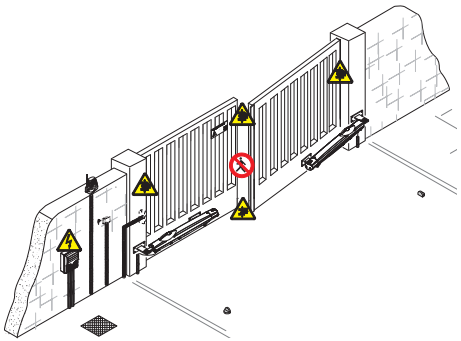

Danger of foot crushing

Danger of hand crushing

Danger! High voltage.

No transiting while maneuvering

www.metalines.com Polydon Industries Ltd, Polydon Park, Radiance Road, Doncaster, South Yorkshire DN1 2TE | Tel: 01302 327172 | Fax: 01302 380124 sales@metalines.com

1 Legend of symbols

This symbol tells you to read the section with particular care.

This symbol tells you that the sections concern safety issues.

This symbol tells you what to say to the end-users.

2 Intended use and application

2.1 Intended use

The A1824 operator is designed to automate swing gates used in residential or condominium settings..

The use of this product for purposes other than those described above and installation executed in a manner other than as instructed in this technical manual are prohibited.

2.2 Application

Length of gate leaf	1 m	1,5 m	1,8 m
Weight of gate leaf	250 kg	215 kg	200 kg

We suggest you always fit an electrolock onto swing gates for a more reliable closure.

3 Reference Standards

The company CAME S.p.A. is ISO 9001:2000 quality certified; it has also obtained the ISO 14001 environmental safeguarding certification. Came engineers and manufactures all of its products in Italy.
This product complies with the following standards: EN 12978, UNI EN 954-1, CEI EN 60335-1, UNI EN 12453.

4 Description

4.1 Gate Operator

This product is engineered and manufactured by CAME S.p.A. and complies with current safety regulations. Guaranteed 24 months if not tampered with.

The gearmotor is made up of two aluminium alloy half shells housing the Encoder gearmotor - which features an electric blocking mechanism - and an epicyclical reduction system with endless screw.

4.2 Technical features

Control board power supply: 230V A.C. 50/60Hz
Motor power supply: 24V D.C.
Max draw: 4A
Power: 100W
Adjustable thrust:400÷2000N
Opening time (90°): Adjustable
Gear ratio: 1/36
Duty Cycle: Intensive use
Protection Rating: IP44
Weight: 7,5 kg



www.metalines.com Polydon Industries Ltd, Polydon Park, Radiance Road, Doncaster, South Yorkshire DN1 2TE | Tel: 01302 327172 | Fax: 01302 380124 sales@metalines.com

ENGLISH

4.3 Description of parts

A1824

1) Operator
2) Pilaster bracket
3) Gate bracket
4) Screw, bushing and nut for the pilaster bracket
5) Bolt and nut for the gate bracket
6) Pin distancer

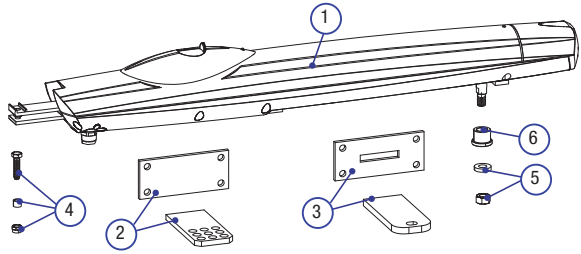

4.4 Dimensions

(mm)

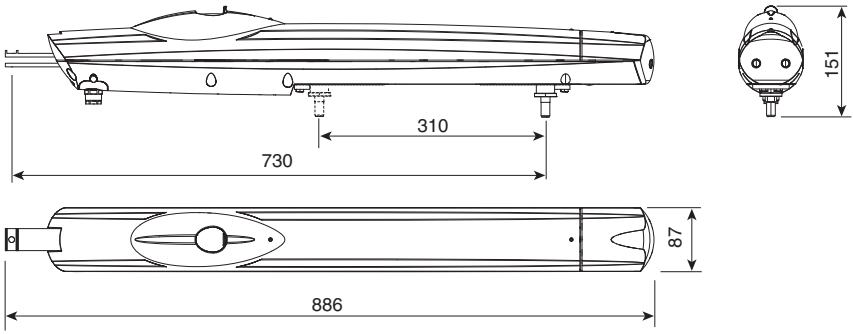

5 Installation

⚠ Installation must be carried out by expert qualified personnel and in full compliance with current regulations.

5.1 Preliminary checks

⚠ Before installing, do the following:

- Make sure you have suitable tubing and conduits for the electrical cables to pass through and be protected against mechanical damage;
- Fit tubing to drain away any water leaks which may cause oxidation;
- ⏚ Make sure that any connections inside the case (that provide continuance to the protective circuit) be fitted with extra insulation as compared to the other conductive parts inside;
- Make sure the structure of the gate is sturdy, the hinges work and that the is no friction between moving and non-moving parts;
- Make sure there is a mechanical stop for opening and closing.

 © CAME S.p.A. - The data and information reported in this installation manual are susceptible to change at any time and without obligation on CAME S.p.A. to notify users.

www.metalines.com Polydon Industries Ltd, Polydon Park, Radiance Road, Doncaster, South Yorkshire DN1 2TE | Tel: 01302 327172 | Fax: 01302 380124 sales@metalines.com

5.2 Tools and materials

Make sure you have all the tools and materials you will need for the installation at hand to work in total safety and compliance with the current standards and regulations. The following figure illustrates the minimum equipment needed by the installer.

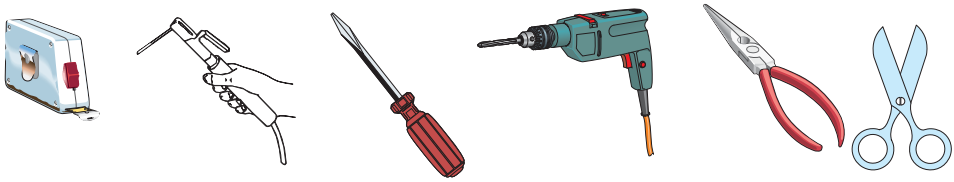

5.3 Cable list and minimum thickness

Connections	Type of cable	Length of cable 1 < 10 m	Length of cable 10 < 20 m	Length of cable 20 < 30 m
Control panel power supply 230V	FROR CEI 20-22 CEI EN 50267-2-1	3G x 1,5 mm^2	3G x 2,5 mm^2	3G x 4 mm^2
Motor power supply 24V		3 x 1 mm^2	3 x 1,5 mm^2	3 x 2,5 mm^2
Flashing light		2 x 0,5 mm^2	2 x 1 mm^2	2 x 1,5 mm^2
Photocell transmitters		2 x 0,5 mm^2	2 x 0.5 mm^2	2 x 0,5 mm^2
Photocell receivers		4 x 0,5 mm^2	4 x 0,5 mm^2	4 x 0,5 mm^2
Accessories power supply		2 x 0,5 mm^2	2 x 0,5 mm^2	2 x 1 mm^2
Control and safety devices		2 x 0,5 mm^2	2 x 0,5 mm^2	2 x 0,5 mm^2
Antenna	RG58	max. 10 m		

N.B.: If the cable length differs from that specified in the table, then you must determine the proper cable diameter in the basis of the actual power draw by the connected devices and depending on the standards specified in CEI EN 60204-1.
For connections that require several, sequential loads, the sizes given on the table must be re-evaluated based on actual power draw and distances.
When connecting products that are not specified in this manual, please follow the documentation provided with said products.

5.4 Standard installation

1) A1824 operator
2) Control panel
3) Reception antenna
4) Flashing light
5) Selector switch
6) Photocells
7) Electric cable junction box
8) Mechanical gate stops

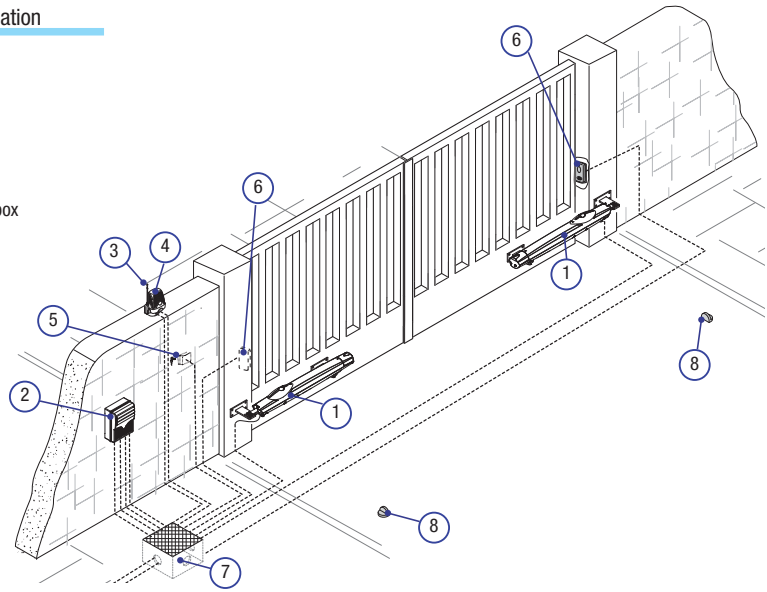

ENGLISH

 © CAME S.p.A. - The data and information reported in this installation manual are susceptible to change at any time and without obligation on CAME S.p.A. to notify users.

www.metalines.com Polydon Industries Ltd, Polydon Park, Radiance Road, Doncaster, South Yorkshire DN1 2TE | Tel: 01302 327172 | Fax: 01302 380124 sales@metalines.com

5.5 Installing the operator

⚠ The following illustrations are only examples, given that the space available for anchoring the operator and accessories may vary from gate to gate. It is up to the installer, thus, to choose the most suitable solution.

ENGLISH

Lay the corrugated tubing needed for the connections deriving from the junction box.
N.B. the number of tubes depends on the type of system and accessories employed.

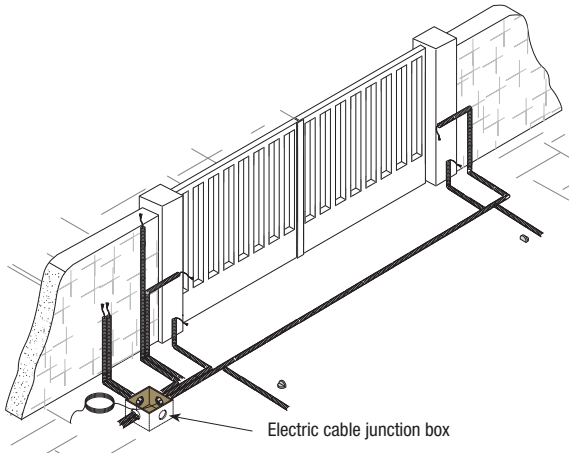

Warning: after establishing the best point to which you will secure the gate bracket, secure the bracket to the pillar and make sure the quotas shown in the table below are met.
Note: by increasing measure B, the opening angle and gate speed are reduced, while the gearmotor thrust is increased. By increasing the measure A, the opening angle and gate speed are increases, while the gearmotor thrust is decreased.

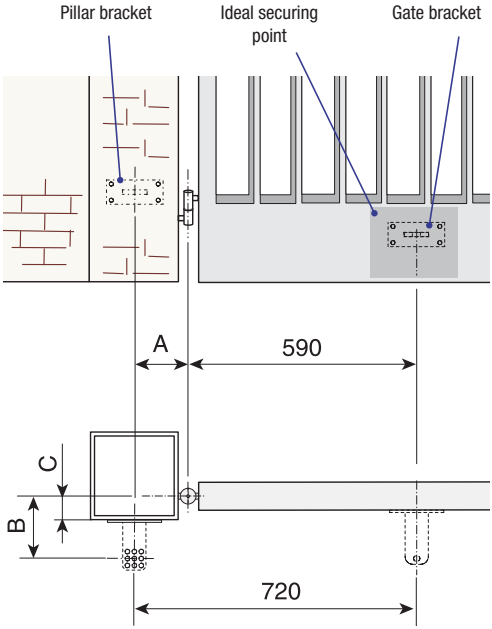

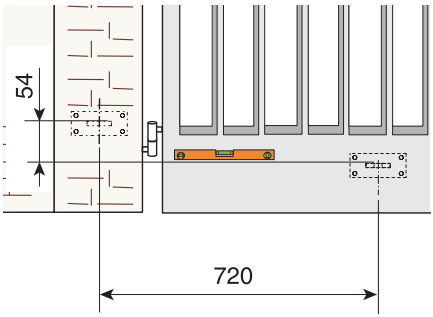

Opening	A (mm)	B (mm)	C (mm)
90°	130	130	60
120°	130	110	50

 © CAME S.p.A. - The data and information reported in this installation manual are susceptible to change at any time and without obligation on CAME S.p.A. to notify users.

www.metalines.com Polydon Industries Ltd, Polydon Park, Radiance Road, Doncaster, South Yorkshire DN1 2TE | Tel: 01302 327172 | Fax: 01302 380124 sales@metalines.com

Assemble and weld the two parts of the pillar bracket. Secure the bracket to the point you have chosen with proper plugs and screws or - if the pillar is made of metal - weld it on.

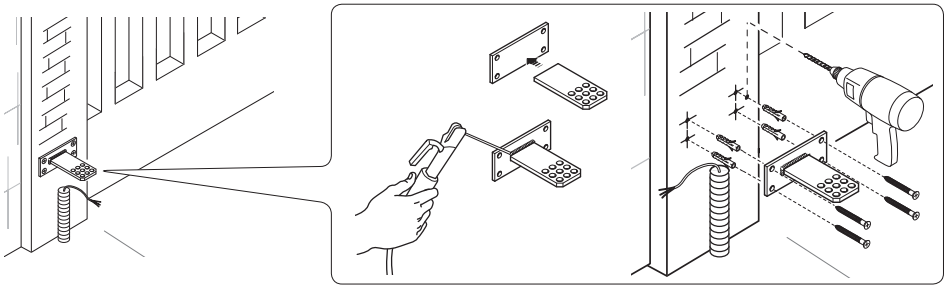

Weld the gate bracket to the gate leaf making sure the quotas shown in the table are met.

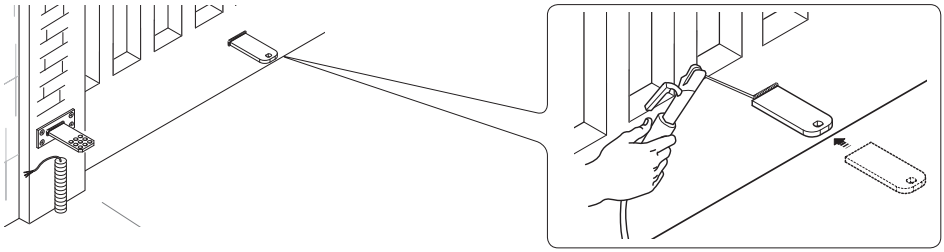

Note: on non-metal gate leaves assemble and weld the two parts of the bracket and secure them with proper screws. Secure the tail joint to the bracket.

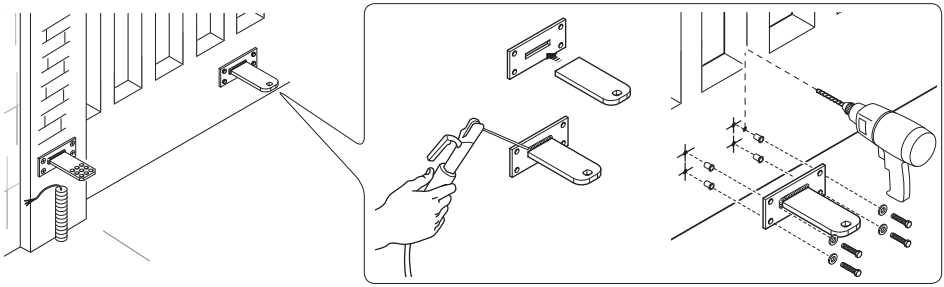

Insert the bushing (lubricated) into the pillar bracket's hole. The bracket has holes that allow the opening angle to be changed. Secure the tail joint to the bracket.

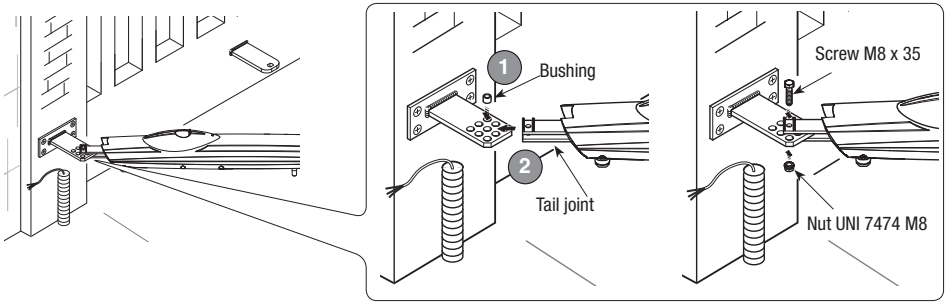

ENGLISH

 © CAME S.p.A. - The data and information reported in this installation manual are susceptible to change at any time and without obligation on CAME S.p.A. to notify users.

www.metalines.com Polydon Industries Ltd, Polydon Park, Radiance Road, Doncaster, South Yorkshire DN1 2TE | Tel: 01302 327172 | Fax: 01302 380124 sales@metalines.com

ENGLISH

Insert the bushing onto the main lug as shown in the drawing.

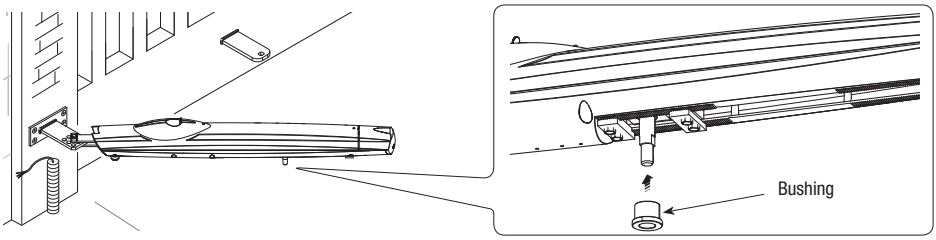

Loosen the nuts of the mechanical stops.

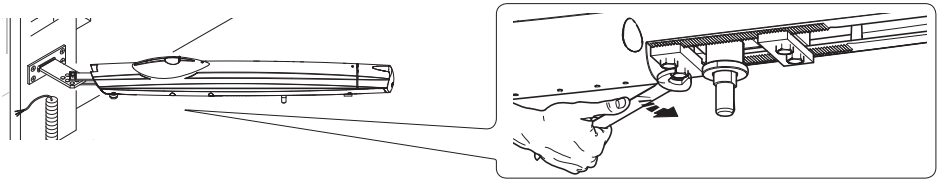

Open the gate leaf, insert the faceted anchoring lug into the slotted hole in the head bracket and tighten it using the (1) issued washer and nut or, alternatively, release the gearmotor (see manual release paragraph), remove the head cover and move the faceted anchoring lug using a screwdriver until it lines up with the slotted hole, then secure it.
(2) Procedure to carry out even when lubricating the endless screw (see maintenance paragraph)
Warning: make sure that the anchoring lug is **perfectly inserted in line** with the slotted hole.

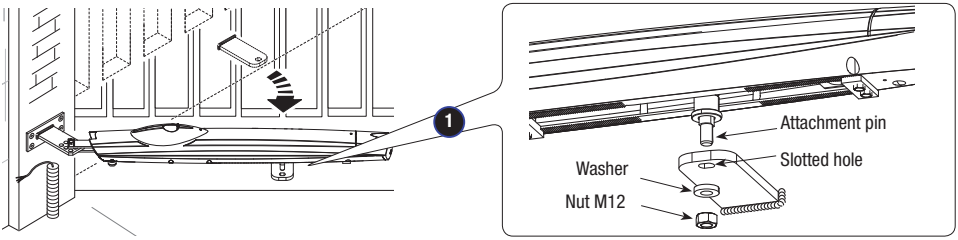

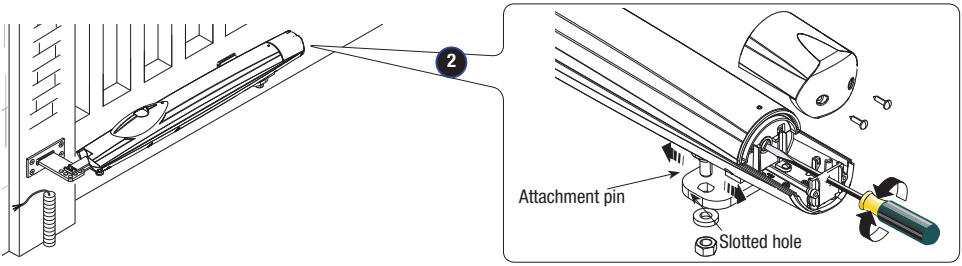

Open the gate to the max opening position, place the mechanical stop against it with the pin attachment and fix it in place.

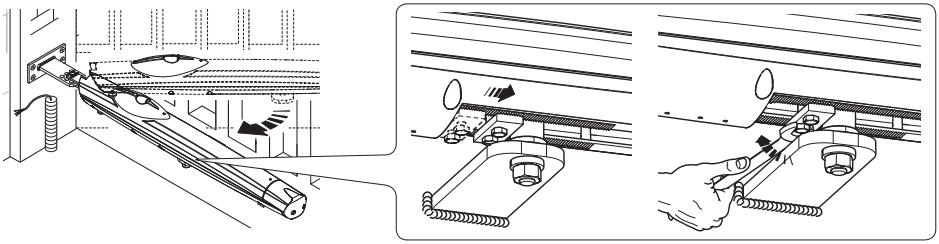

 © CAME S.p.A. - The data and information reported in this installation manual are susceptible to change at any time and without obligation on CAME S.p.A. to notify users.

www.metalines.com Polydon Industries Ltd, Polydon Park, Radiance Road, Doncaster, South Yorkshire DN1 2TE | Tel: 01302 327172 | Fax: 01302 380124 sales@metalines.com

Close the gate leaf, loosen the nuts on the closing mechanical stop, place it up against the attachment pin, then secure it.

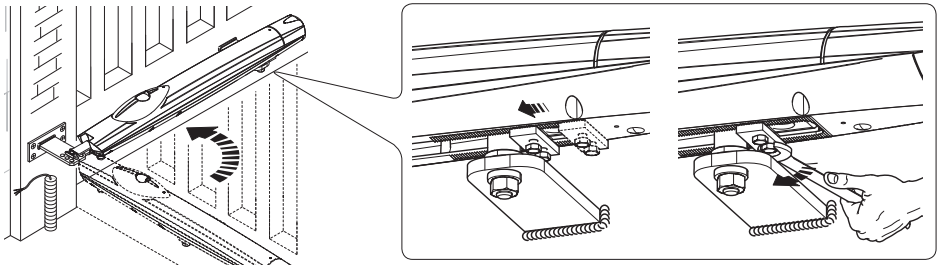

5.6 Manual release of the gearmotor

Slide open the small door that protects the release, insert the tri-lobed key and turn it.

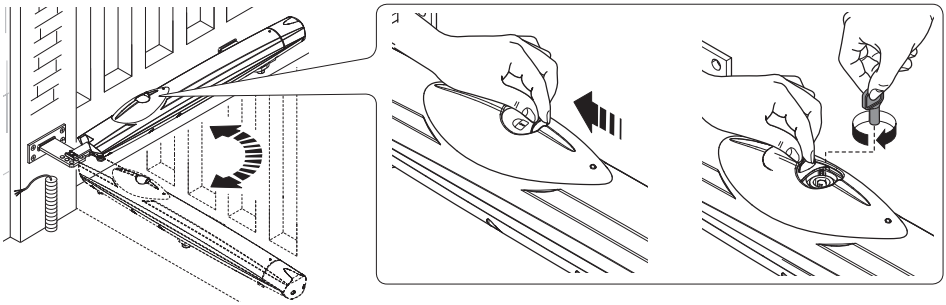

5.7 Connecting to the control panel

For the electrical connection procedures, use the junction box and branching boxes.

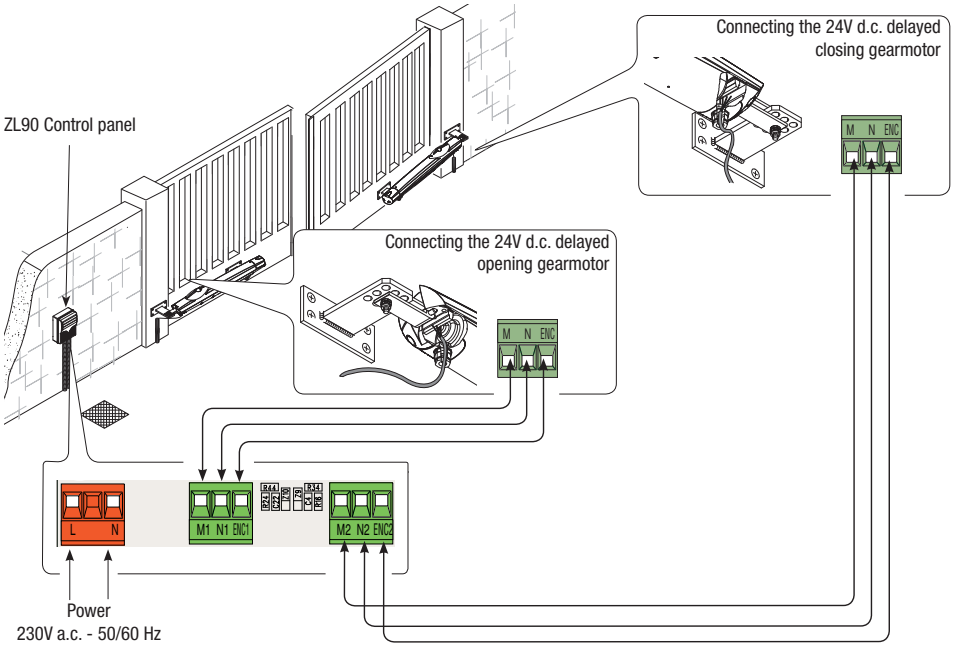

 © CAME S.p.A. - The data and information reported in this installation manual are susceptible to change at any time and without obligation on CAME S.p.A. to notify users.

www.metalines.com Polydon Industries Ltd, Polydon Park, Radiance Road, Doncaster, South Yorkshire DN1 2TE | Tel: 01302 327172 | Fax: 01302 380124 sales@metalines.com

5.8 Outward opening installation

Opening	A (mm)	B (mm)	E (mm)
90°	130	130	720

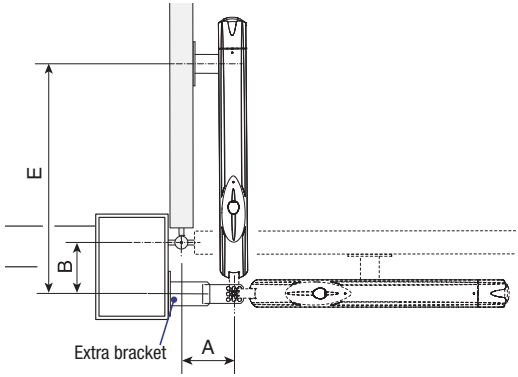

Weld the extra bracket to that of the pillar, secure the extra bracket to the pillar making sure the A and B quotas are met as shown in the table.
Open the gate to a 90° arc, weld or secure using proper screws the gate bracket making sure the E quota is met.
Secure the gearmotor to the brackets.

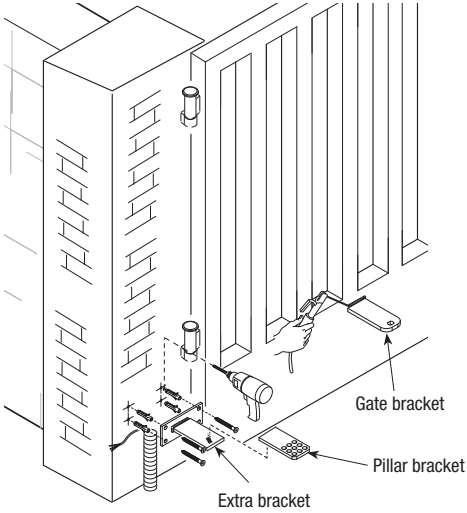

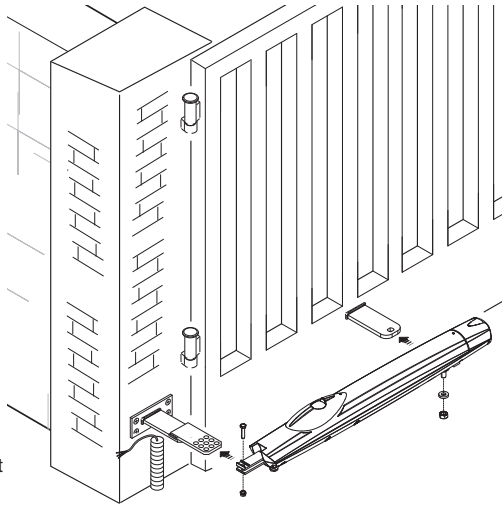

Connect the gearmotors to the panel as shown in the diagram.

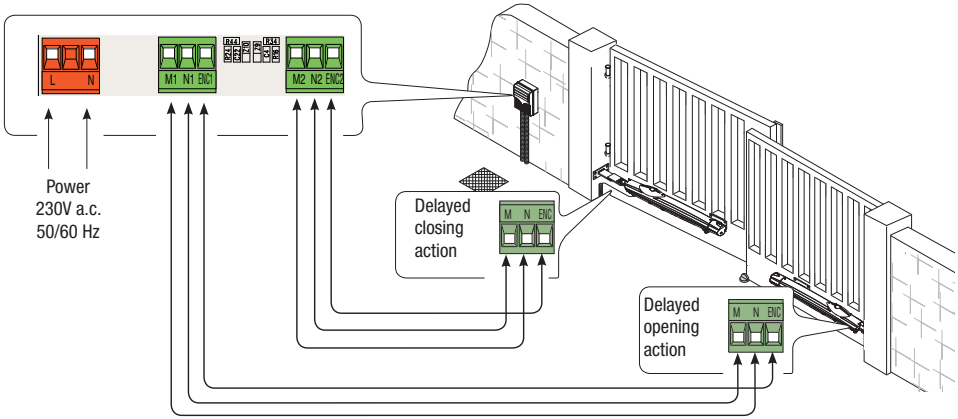

www.metalines.com Polydon Industries Ltd, Polydon Park, Radiance Road, Doncaster, South Yorkshire DN1 2TE | Tel: 01302 327172 | Fax: 01302 380124 sales@metalines.com

9.3 Maintenance

Periodic maintenance

☞ Before doing any maintenance, cut off the power supply, to prevent any hazardous situations caused by accidentally activating the operator.

Periodic maintenance log kept by users (every six months)

Date	Notes	Signature

9.4 Extraordinary maintenance

⚠ The following table is for logging any extraordinary maintenance jobs, repairs and improvements performed by specialized contractors.
🕮 Any extraordinary maintenance jobs must be done only by specialized technicians.

Extraordinary maintenance log

Installer's stamp	Product name
	Date of job
	Technician's signature
	Customer's signature
Job carried out _____	

Installer's stamp	Product name
	Date of job
	Technician's signature
	Customer's signature
Job carried out _____	

 © CAME S.p.A. - The data and information reported in this installation manual are susceptible to change at any time and without obligation on CAME S.p.A. to notify users.

www.metalines.com Polydon Industries Ltd, Polydon Park, Radiance Road, Doncaster, South Yorkshire DN1 2TE | Tel: 01302 327172 | Fax: 01302 380124 sales@metalines.com

7.2 Trouble shooting

MALFUNCTIONS	POSSIBLE CAUSES	CHECK AND REMEDIES
The gate will not open nor close	• There is no power • The gearmotor is released • The transmitter's batteries are run down • The transmitter is broken • The stop button is either stuck or broken • The opening/closing button or the selector switch are stuck	• Check that the power is up • Call assistance • Replace batteries • Call assistance • Call assistance • Call assistance
The gate opens but will not close	• The photocells are engaged	• Check that photocells are clean and in good working order • Call assistance
The Flashing light does not work	• The bulb is burnt	• Call assistance

8 Phasing out and disposal

CAME S.p.A.. employs a UNI EN ISO 14001 certified and compliant environmental protection system at its plants, to ensure that environmental safeguarding.
We ask you to keep protecting the environment, as CAME deems it to be one of the fundamental points of its market operations strategies, by simply following these brief guidelines when disposing.

DISPOSING THE PACKING MATERIALS
The packing components (cardboard, plastic, etc.) are solid urban waste and may be disposed of without any particular difficulty, by simply separating them so that they can be recycled.
Before actions it is always advisable to check the pertinent legislation where installation will take place.
DO NOT DISPOSE OF IN NATURE!

DISPOSING OF THE PRODUCT
Our products are made using different types of materials
The majority of them (aluminium, plastic, iron, electric cables) can be considered to be solid urban waste
They may be recycled at authorised firms
Other components (electrical circuit board, remote control batteries etc.) may contain hazardous waste.
They must, thus, be removed and turned in to licensed firms for their disposal.
Before acting always check the local laws on the matter.
DO NOT DISPOSE OF IN NATURE!

DECLARATION OF CONFORMITY

Declaration CE CAME S.p.A. declares that this device conforms to the essential, pertinent requirements provided by directives 2006/42/CE, 2004/108/CE.
An original copy of the declaration of conformity is available on request.

CAME
safety&comfort
www. came.com

IT • Per ogni ulteriore informazione su azienda, prodotti e assistenza nella vostra lingua:
EN • For any further information on company, products and assistance in your language:
FR • Pour toute autre information sur la société, les produits et l'assistance dans votre langue :
DE • Weitere Infos über Unternehmen, Produkte und Kundendienst bei:
ES • Para cualquier información sobre la empresa, los productos y asistencia en su idioma:
NL • Voor meer informatie over het bedrijf, de producten en hulp in uw eigen taal:
PT • Para toda e qualquer informação acerca da empresa, de produtos e assistência técnica, em sua língua:
PL • Wszystkie inne informacje dotyczące firmy, produktów oraz usług i pomocy technicznej w Waszym języku znajdują się na stronie:
RU • Для получения дополнительной информации о компании, продукции и сервисной поддержке на вашем языке:
HU • A vállalatra, termékeire és a műszaki szervizre vonatkozó minden további információért az Ön nyelvén:
HR • Za sve dodatne informacije o poduzeću, proizvodima i tehničkoj podršci:
UK • Для отримання будь-якої іншої інформації про компанію, продукцію та технічну підтримку:

www.metalines.com Polydon Industries Ltd, Polydon Park, Radiance Road, Doncaster, South Yorkshire DN1 2TE | Tel: 01302 327172 | Fax: 01302 380124 sales@metalines.com