CAME

119AU03EN

UNDERGROUND OPERATOR
FOR SWING GATES

Official Partner
EXPO
MILANO 2015
FEEDING THE PLANET
ENERGY FOR LIFE



Installation manual

FROG MD - FROG MS

English EN

www.metalines.com Polydon Industries Ltd, Polydon Park, Radiance Road, Doncaster, South Yorkshire DN1 2TE | Tel: 01302 327172 | Fax: 01302 380124 sales@metalines.com

WARNING!
important safety instructions:
READ CAREFULLY!

Premise

• Employ this product only for the use for which it was expressly made. Any other use is dangerous. Came S.p.A. Is not liable for any damage caused by improper, wrongful and unreasonable use • keep these warnings together with the installation and operation manuals that come with the operator.

Before installing

(Checking what's there: if your evaluation is negative, do not proceed before having complied with all safety requirements)

• Check that the automated parts are in good mechanical order, that the operator is level and aligned, and that it opens and closes properly. Make sure you have suitable mechanical stops • if the operator is to be installed at a height of over 2.5 M from the ground or other access level, make sure you have any necessary protections and/or warnings in place • if any pedestrian openings are fitted into the operator, there must also be a a system to block their opening while they are moving • make sure that the opening automated door or gate cannot entrap people against the fixed parts of the operator • do not install the operator upside down or onto elements that could yield and bend. If necessary, add suitable reinforcements to the anchoring points • do not install door or gate leaves on tilted surfaces • make sure any sprinkler systems cannot wet the operator from the ground up • make sure the temperature range shown on the product literature is suitable to the climate where it will be installed • follow all instructions as improper installation may result in serious bodily injury • it is important to follow these instructions for the safety of people. Keep these instructions.

Installing

• Suitably section off and demarcate the entire installation site to prevent unauthorized persons from entering the area, especially minors and children • be careful when handling operators that weigh over 20 kg. If need be, use proper safety hoisting equipment • all opening commands (that is, buttons, key switches, magnetic readers, and so on) must be installed at least 1.85 M from the perimeter of the gate's working area, or where they cannot be reached from outside the gate. Also, any direct commands (buttons, touch panels, and so on) must be installed at least 1.5 M from the ground and must not be reachable by unauthorized persons • all maintained action commands, must be fitted in places from which the moving gate leaves and transit and driving areas are visible • apply, if missing, a permanent sign showing the position of the release device • before delivering to the users, make sure the system is en 12453 standard compliant (regarding impact forces), and also make sure the system has been properly adjusted and that any safety, protection and manual release devices are working properly • apply warning signs (such as the gate's plate) where necessary and in a visible place

Special user-instructions and recommendations

• Keep gate operation areas clean and free of any obstructions. Make sure that the photocells are free of any overgrown vegetation and that the operator's area of operation is free of any obstructions • do not allow children to play with fixed commands, or to loiter in the gate's maneuvering area. Keep any remote control transmitters or any other command device away from children, to prevent the operator from being accidentally activated. • The apparatus may be used by children of eight years and above and by physically, mentally and sensorially challenged people, or even ones without any experience, provided this happens under close supervision or once they have been properly instructed to use the apparatus safely and about the potential hazards involved. Children must not play with the apparatus. Cleaning and maintenance by users must not be done by children, unless properly supervised • frequently check the system for any malfunctions or signs of wear and tear or damage to the moving structures, to the component parts, all anchoring points, including cables and any accessible connections. Keep any hinges, moving joints and slide rails properly lubricated • perform functional checks on the photocells and sensitive safety edges, every six months. To check whether the photocells are working, wave an object in front of them while the gate is closing; if the operator inverts its direction of travel or suddenly stops, the photocells are working properly. This is the only maintenance operation to do with the power on. Constantly clean the photocells' glass covers using a slightly water-moistened cloth; do not use any solvents or other chemical products that may ruin the devices • if repairs or modifications are required to the system, release the operator and do not use it until safety conditions have been restored • cut off the power supply before releasing the operator for manual openings and before any other operation, to prevent potentially hazardous situations. Read the instructions • if the power supply cable is damaged, it must be replaced by the manufacturer or authorized technical assistance service, or in any case, by similarly qualified persons, to prevent any risk • it is forbidden for users to perform any operations that are not expressly required of them and which are not listed in the manuals. For any repairs, modifications and adjustments and for extraordinary maintenance, call technical assistance • log the job and checks into the periodic maintenance log.

Additional special recommendations for everyone

• Keep away from hinges and mechanical moving parts • do not enter the operator's area of operation when it is moving • do not counter the operator's movement as this could result in dangerous situations • always pay special attention to any dangerous points, which have to be labeled with specific pictograms and/or black and yellow stripes • while using a selector switch or a command in maintained actions, keep checking that there are no persons within the operating range of any moving parts, until the command is released • the gate may move at any time and without warning • always cut off the power supply before performing any maintenance or cleaning.

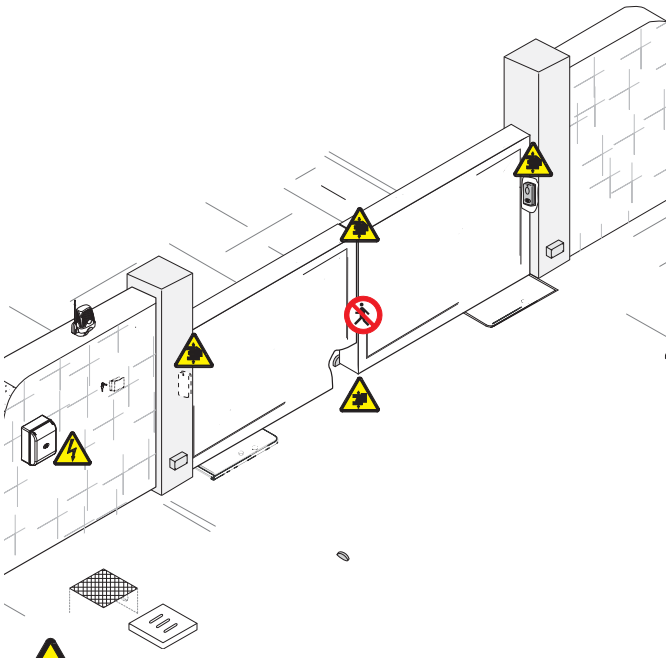


Danger of foot crushing


Hand crushing hazard


Danger high voltage


No transit during operation

 © CAME S.p.A. - The data and information provided in this manual are subject to change at any time without prior notice by CAME S.p.A.

www.metalines.com Polydon Industries Ltd, Polydon Park, Radiance Road, Doncaster, South Yorkshire DN1 2TE | **Tel:** 01302 327172 | **Fax:** 01302 380124 sales@metalines.com

KEY

📖 This symbol indicates parts to read carefully.
⚠ This symbol indicates parts about safety.
☞ This symbol tells you what to say to the end users.

THE MEASUREMENTS, UNLESS OTHERWISE STATED, ARE IN MILLIMETERS.

DESCRIPTION

This product has been designed and built by CAME S.p.A. in compliance with applicable safety standards. The operator is composed of a foundation box, a gearmotor and a series of arms.
The foundation box is made of steel that is 4 mm thick. Inside, there is the gearmotor, consisting of a die cast aluminium gearbox casing with an irreversible worm screw and spiral ring gear system inside, lubricated with SINCAT oil and fitted with a transmission arm.

Intended use

The operator is designed to power swing gates.

📖 Any installation and operation that differs from what is set out in this manual is prohibited.

Limits of use

Type	FROG MD - FROG MS					
Gate leaf length (m)	< 4	4	5	6	7	8
Gate leaf weight (kg)	1500	1200	1000	800	700	600

With swing gates it is always advisable to install and electro-lock. This is to ensure a reliable closing and to protect the gearmotor's inner workings. But whereas with reversible operators it is merely advisable, with irreversible ones, beyond 2.5 m, it is obligatory.

Technical data

Type	FROG MD - FROG MS
Motor power supply (V - 50/60 Hz)	230/400 AC
Power supply (V - 50/60 Hz)	230/400 AC
Power (W)	600
Power draw (A)	2.5 max.
Torque (Nm)	1000 max.
Opening time to 95° (sec)	45
Gear ratio	1/1800
rpm	0.35
Duty cycle	50%
Protection rating (IP)	67
Insulation class	II
Operating temperature (°C)	-20 - +55
Weight (kg)	89,36

Packing list

1. Gearmotor
2. UNI5588 M12 nuts
3. Crow's-foot spanner
4. Installation manual

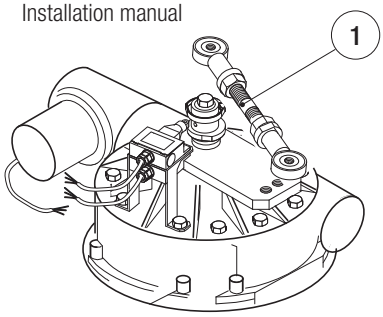

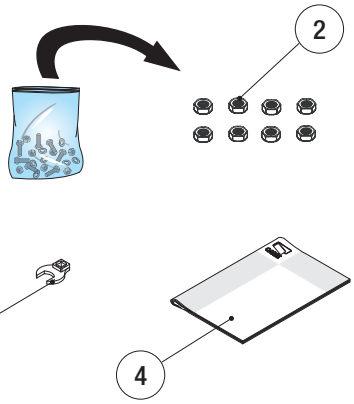

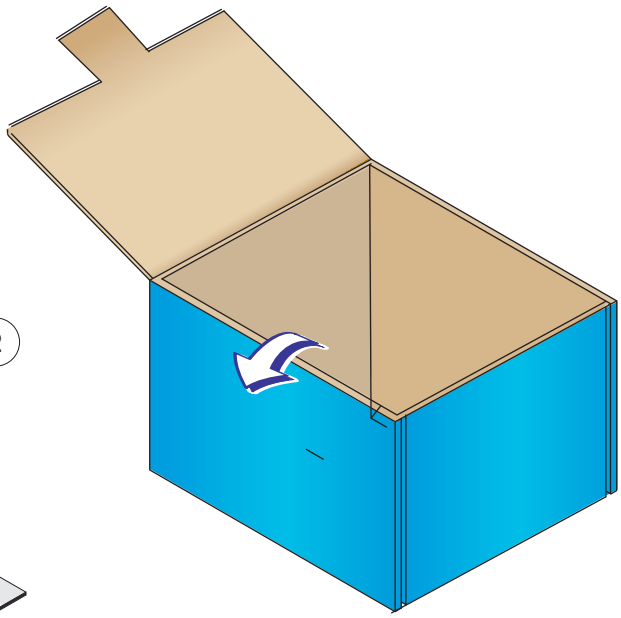

Page 3 - Manual code: 119AU03EN vers. 5 03/2016 © CAME S.p.A. - The data and information provided in this manual are subject to change at any time without prior notice by CAME S.p.A.

Description of the components

1. Tie rod
2. Motor arm
3. Gearmotor
4. Cover
5. Foundation box
6. Upper arm
7. Arm unit
8. Brass
9. Casing hole cover
10. Mechanical stop
11. Limit switch

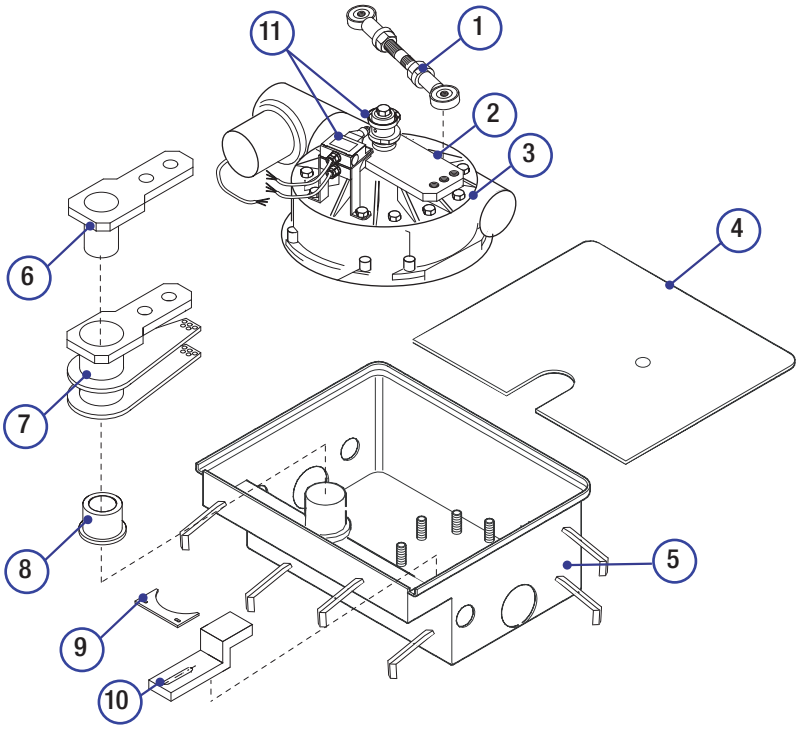

Dimensions

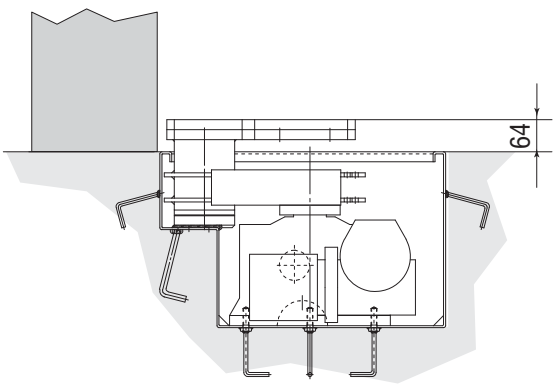

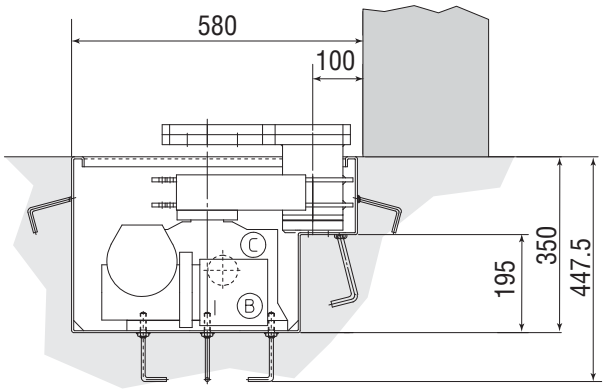

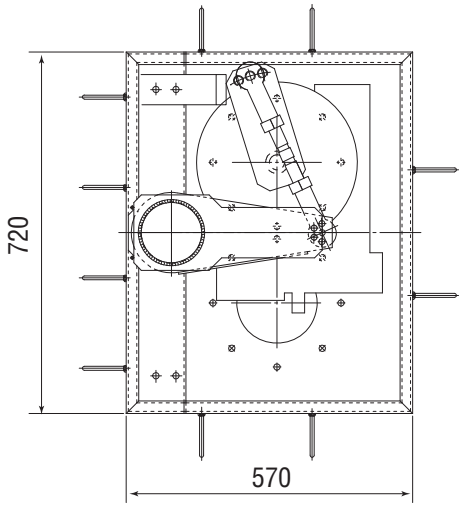

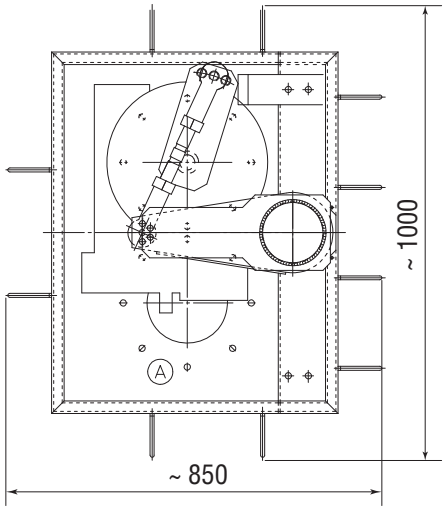

Page 4 - Manual code: **119AU03EN** vers. **5** 03/2016 © CAME S.p.A. - The data and information provided in this manual are subject to change at any time without prior notice by CAME S.p.A.

GENERAL INSTALLATION INSTRUCTIONS

⚠ Installation must be carried out by qualified and experienced personnel in compliance with applicable regulations.

Preliminary checks

⚠ Before installing the operator:

- Provide a suitable single-pole disconnection device, with a maximum of 3 mm between the contacts, to disconnect the power supply;
- Prepare suitable piping and ducts for routing the electrical cables, ensuring protection against mechanical damage;
- Prepare a drain pipe to prevent stagnation that may cause oxidation;
- ⏚ Make sure that any connections within the container (made to ensure the continuity of the protection circuit) are fitted with additional insulation compared to the other internal conductor parts;
- Make sure the gate structure is sturdy enough, that the hinges are in proper working order and that there is no friction between the moving and fixed parts;
- Make sure there are opening and closing mechanical stops.

Tools and materials

Make sure you have all the tools and materials you will need for the installation at hand to work in total safety and compliance with current standards and regulations. The figure shows some examples of installer's tools.

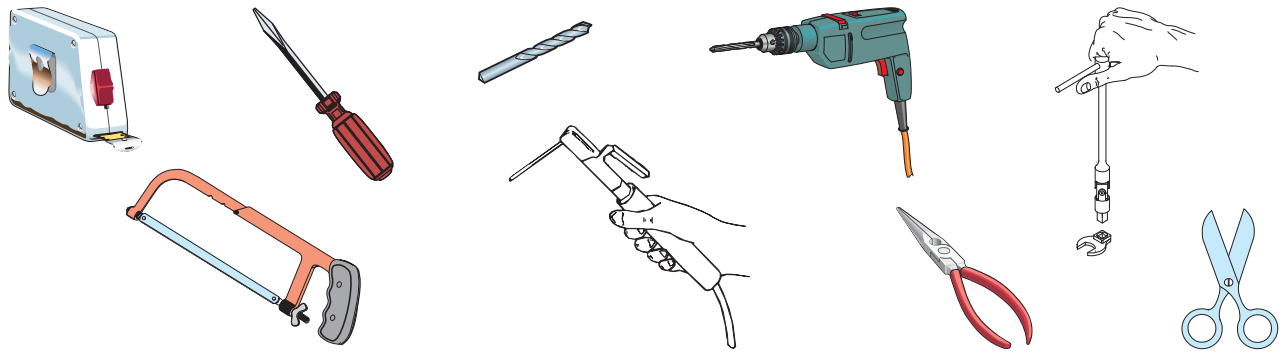

Types of cables and minimum thicknesses

Connection	Cable type	Cable length 1 < 10 m	Cable length 10 < 20 m	Cable length 20 < 30 m
Board power supply 230/400 V 3P	FROR CEI 20-22 IEC EN 50267-2-1	4G x 1.5 mm^2	4G x 2.5 mm^2	4G x 4 mm^2
Motor power supply 230/400V 3P		4G x 1 mm^2	4G x 1.5 mm^2	4G x 2.5 mm^2
Flashing light		2 x 0.5 mm^2	2 x 1 mm^2	2 x 1.5 mm^2
Photocell transmitters		2 x 0.5 mm^2	2 x 0.5 mm^2	2 x 0.5 mm^2
Photocell receivers		4 x 0.5 mm^2	4 x 0.5 mm^2	4 x 0.5 mm^2
Control and safety devices		2 x 0.5 mm^2	2 x 0.5 mm^2	2 x 0.5 mm^2
Limit switch connection		4 x 0.5 mm^2	4 x 0.5 mm^2	4 x 0.5 mm^2
Antenna connection	RG58	max. 10 m		

N.B.: If the cables differ in length compared to what is shown in the table, the cable cross-section is determined according to the actual current draw of the devices connected and according to the provisions of the IEC EN 60204-1 standard.
For connections that require several, sequential loads, the sizes given on the table must be re-evaluated based on actual power draw and distances. When connecting products that are not specified in this manual, please refer to the documentation provided with said products.

 © CAME S.p.A. - The data and information provided in this manual are subject to change at any time without prior notice by CAME S.p.A.

www.metalines.com Polydon Industries Ltd, Polydon Park, Radiance Road, Doncaster, South Yorkshire DN1 2TE | Tel: 01302 327172 | Fax: 01302 380124 sales@metalines.com

Example of a system

1. Right-hand gearmotor with foundation box
2. Left-hand gearmotor with foundation box
3. Junction box
4. Control panel
5. Antenna
6. Flashing light
7. Key selector
8. Photocells
9. Inspection chamber
10. Drainage chamber
11. Mechanical stops

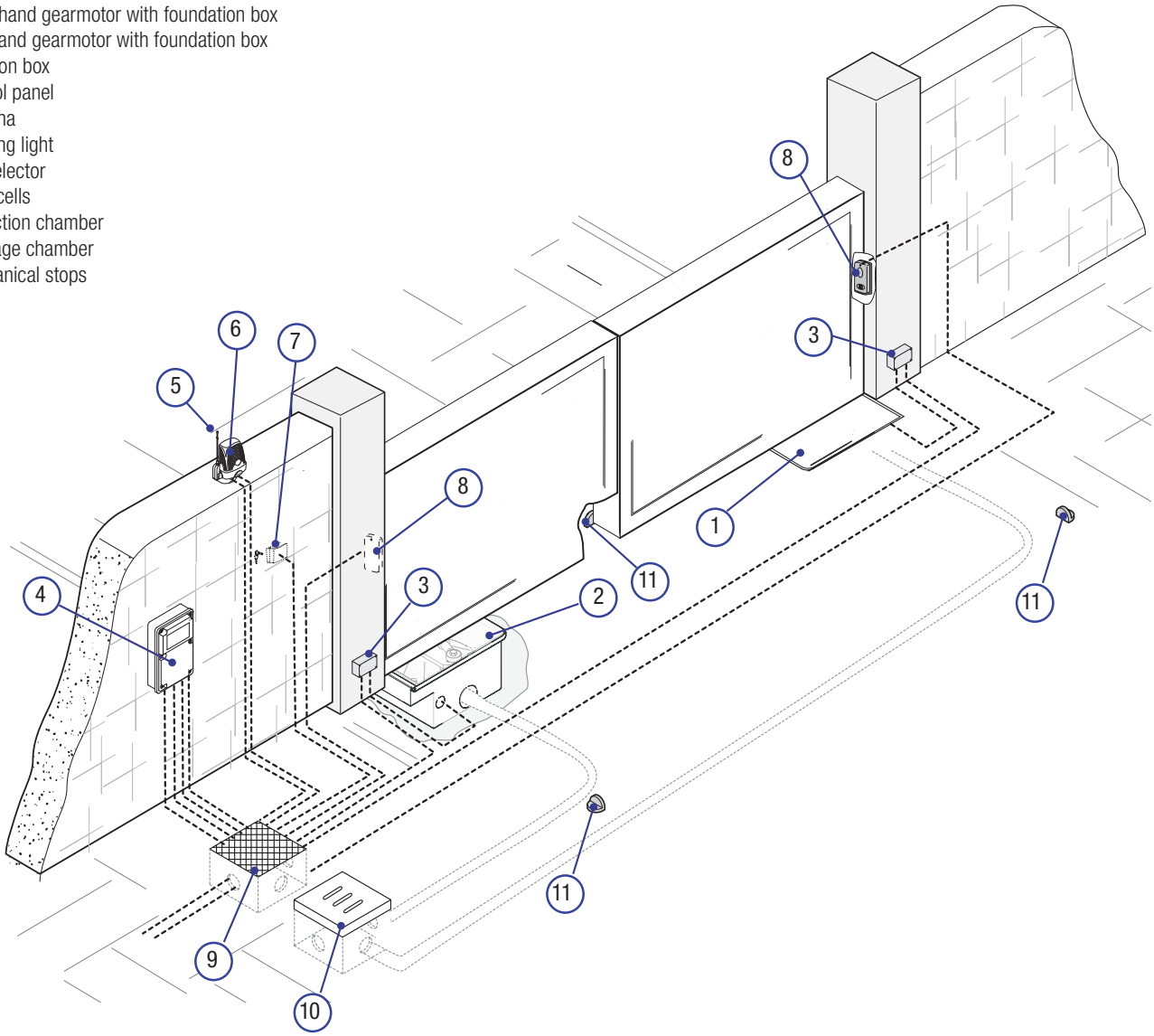

INSTALLATION

⚠ The following illustrations are only examples, given that the space for securing the operator and accessories varies depending on the overall dimensions. The installation technician is responsible for choosing the most suitable solution.

🕮 The following drawings refer to a standard installation of an inward opening gate.

Laying the corrugated pipes and inspection chambers

Make the hole for the box.
Prepare the junction boxes and corrugated pipes necessary for connection to the inspection chamber and the drain pipe.
N.B. the number of tubes depends on the type of system installed and any accessories.

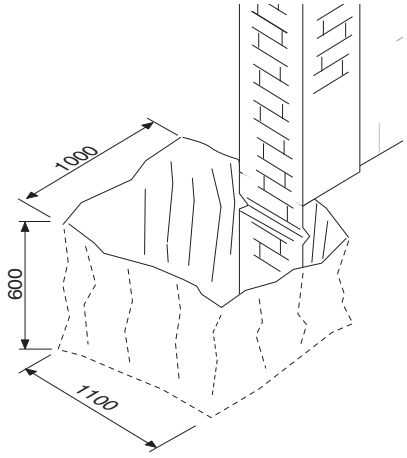

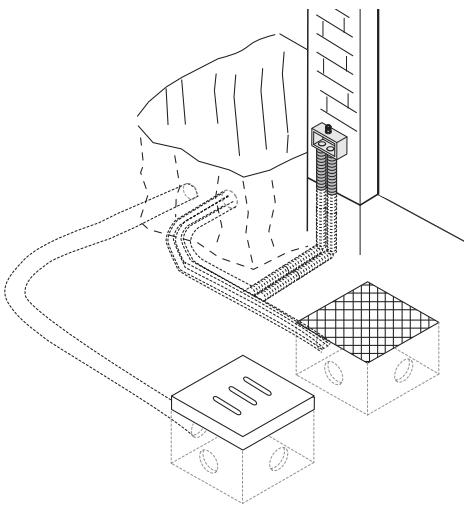

Page 6 - Manual code: 119AU03EN vers. 5 03/2016 © CAME S.p.A. - The data and information provided in this manual are subject to change at any time without prior notice by CAME S.p.A.

Installing the foundation box

Before placing the casing, choose in which direction the leaf will open.
Lean the box against the pillar making sure that the corrugated pipes and the drain pipe pass through the designated holes.
Fill the hole with concrete.
Position the box level with the ground and place the pin in line with the upper gate hinge. Leave to solidify for at least 24 hours.
Clean any remaining concrete from inside the box.

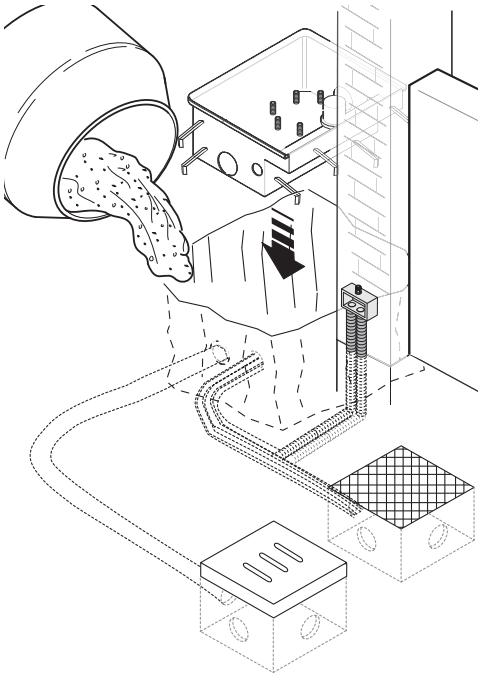

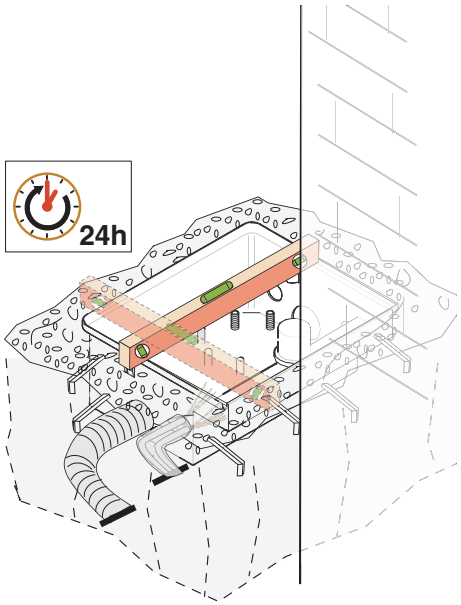

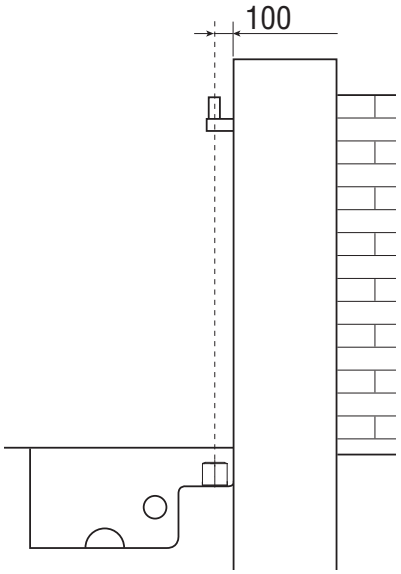

Lubricate the box pin, the brass, the arm unit and the upper arm. Assemble everything as shown in the drawing.

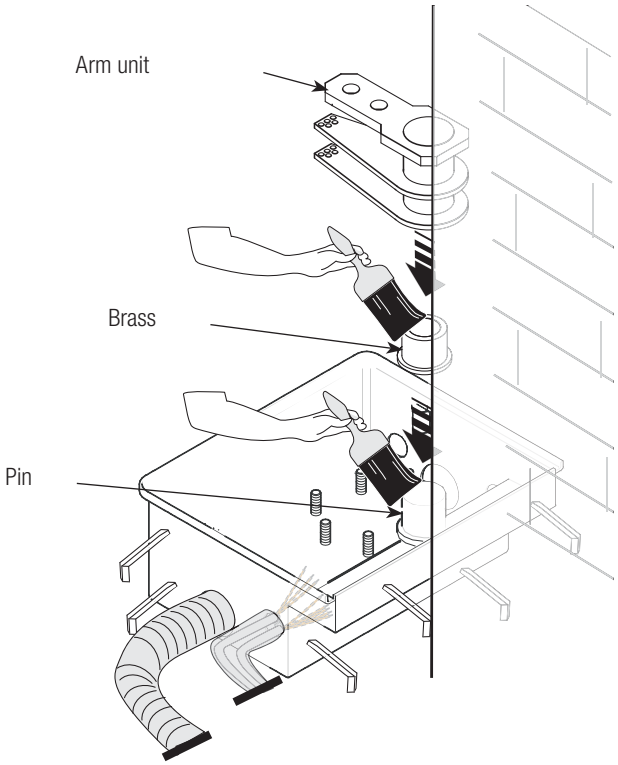

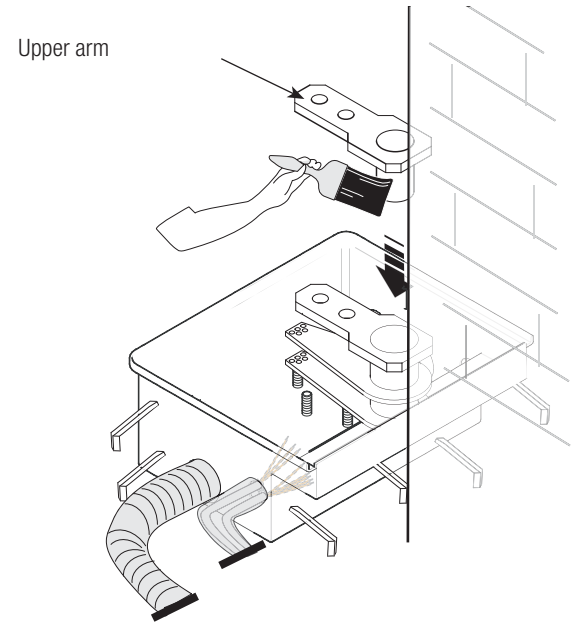

 © CAME S.p.A. - The data and information provided in this manual are subject to change at any time without prior notice by CAME S.p.A.

www.metalines.com Polydon Industries Ltd, Polydon Park, Radiance Road, Doncaster, South Yorkshire DN1 2TE | **Tel:** 01302 327172 | **Fax:** 01302 380124 sales@metalines.com

Install the gate leaf, inserting the upper hinge.
Check that the leaf opens and closes without difficulty.
Secure using suitable screws or weld the leaf carefully to the upper arm.

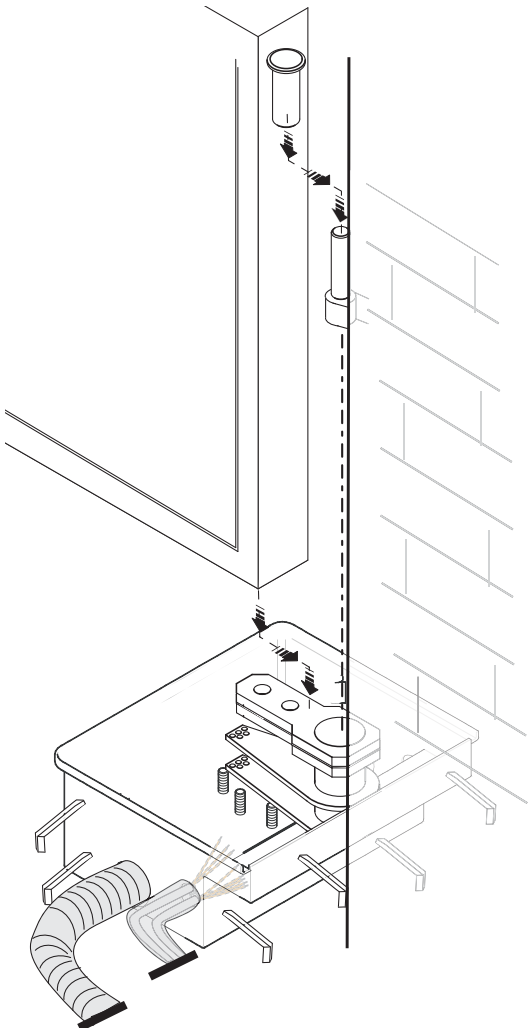

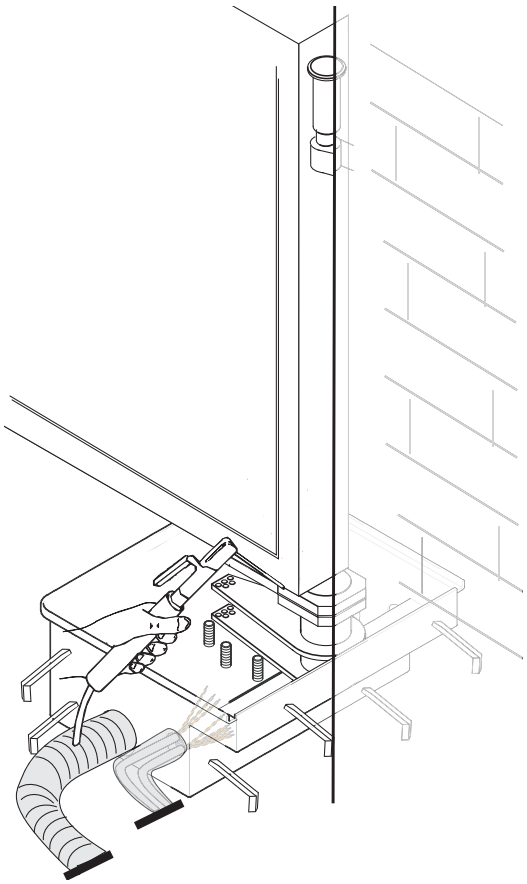

Securing the gearmotor

N.B. the figures below are shown from the outside to make the stages of assembling the right-hand gearmotor more intuitive.
Insert the gearmotor in the foundation box and secure with nuts using the crow's-foot spanner supplied and a ratchet wrench (not supplied).

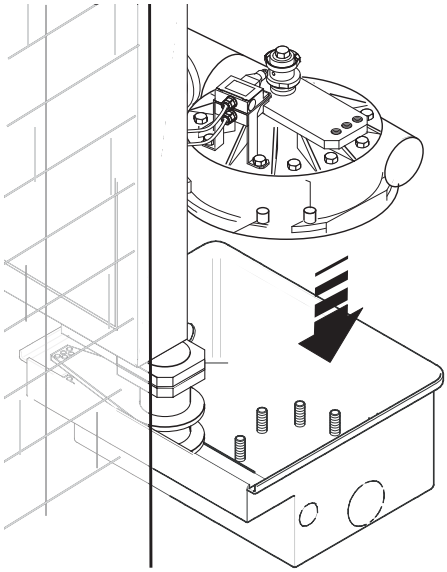

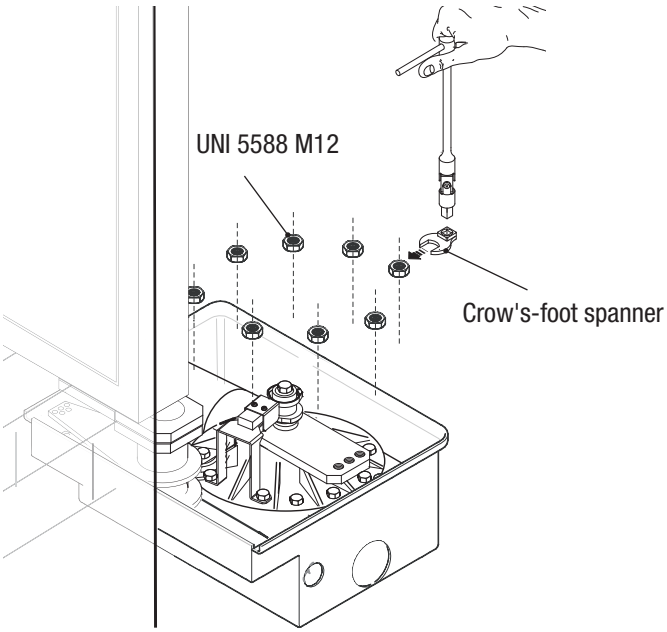

 © CAME S.p.A. - The data and information provided in this manual are subject to change at any time without prior notice by CAME S.p.A.

www.metalines.com Polydon Industries Ltd, Polydon Park, Radiance Road, Doncaster, South Yorkshire DN1 2TE | **Tel:** 01302 327172 | **Fax:** 01302 380124 sales@metalines.com

Secure the tie rod between the motor arm and the arm unit in the prepared holes using nuts and bolts.

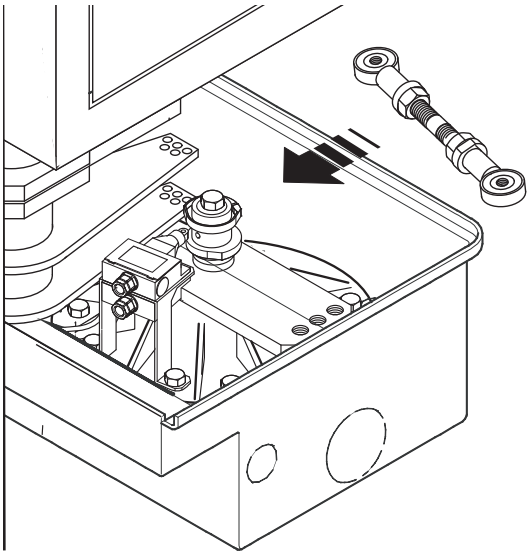

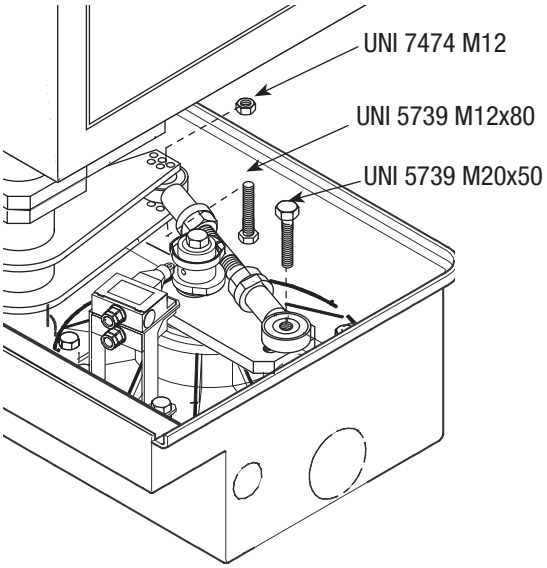

N.B. the arms have several holes in order to obtain various opening angles for the leaves.

90° OPENING

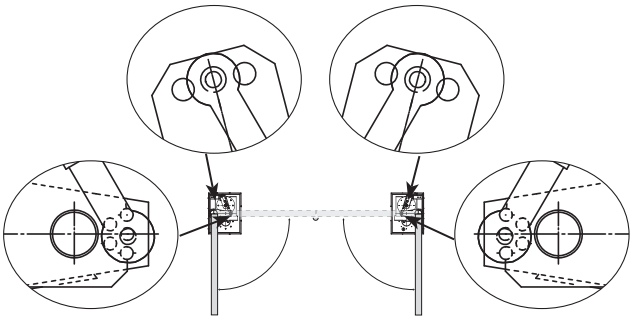

95° OPENING

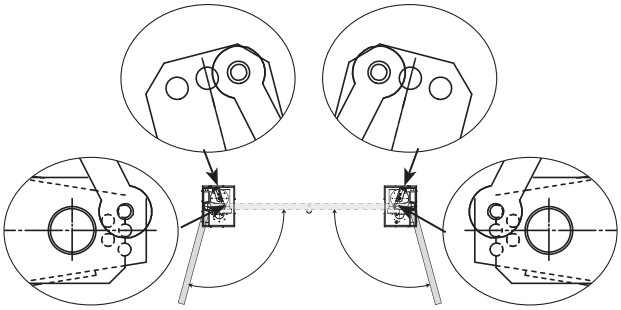

Manual release of the gearmotor

Remove the cap, unscrew the arm/motor unit in an anti-clockwise direction to move the leaf manually.

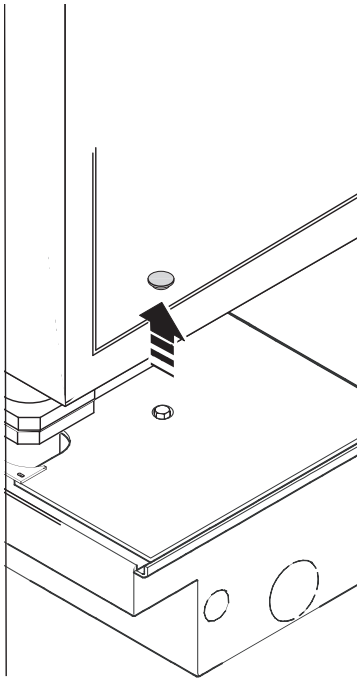

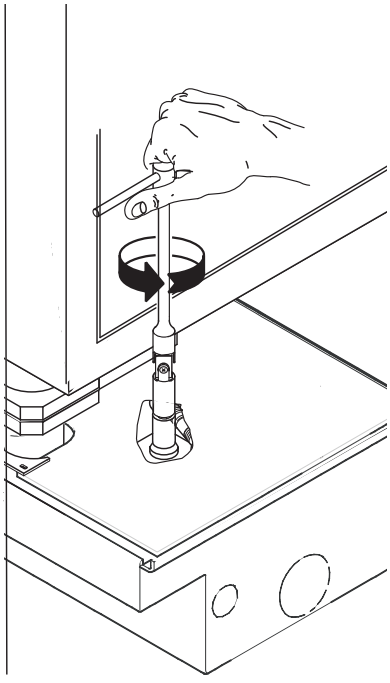

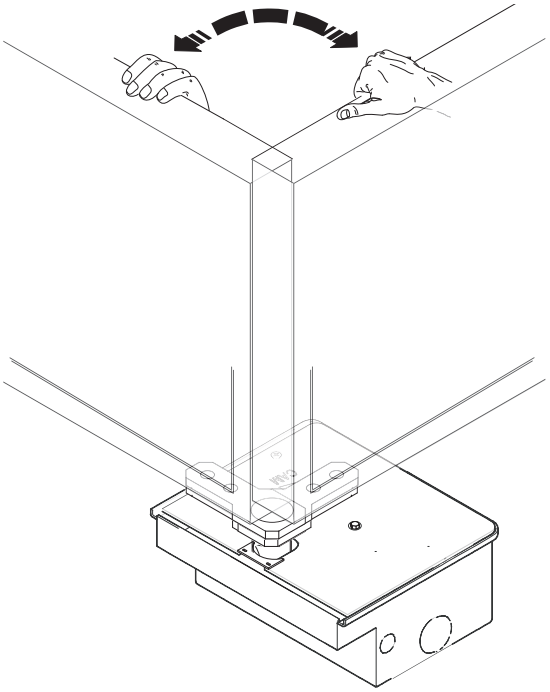

 © CAME S.p.A. - The data and information provided in this manual are subject to change at any time without prior notice by CAME S.p.A.

www.metalines.com Polydon Industries Ltd, Polydon Park, Radiance Road, Doncaster, South Yorkshire DN1 2TE | **Tel:** 01302 327172 | **Fax:** 01302 380124 sales@metalines.com

Adjusting the mechanical stop

Before determining the end run points, release the gearmotor, close the leaf manually and adjust the mechanical stop, bringing it to the end of its run with the motor arm. Secure the nuts.

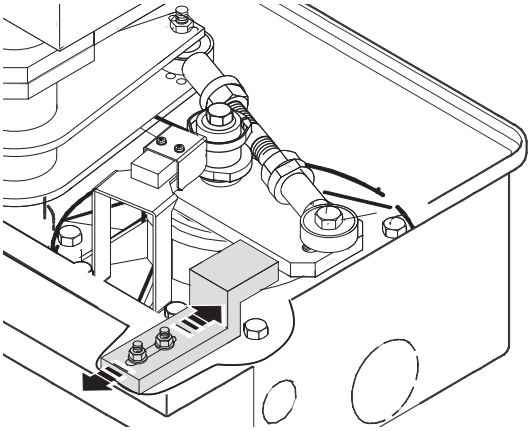

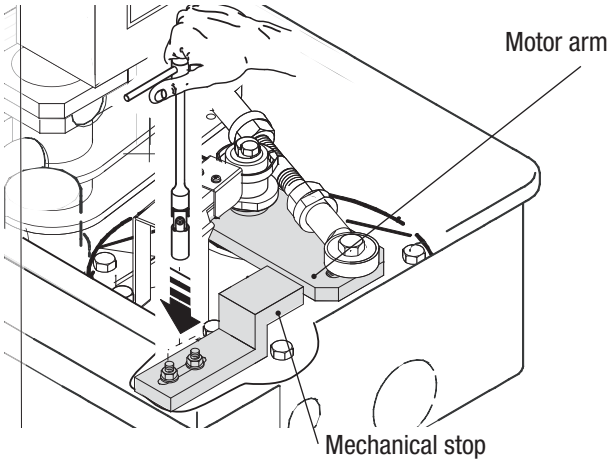

Establishing the limit-switch points

For opening:

- completely open the leaves;
- turn the left-hand gearmotor cam clockwise ⓐ until the micro switch engages ⓑ;
- turn the right-hand gearmotor cam counter clockwise ⓒ until the micro switch engages ⓓ.

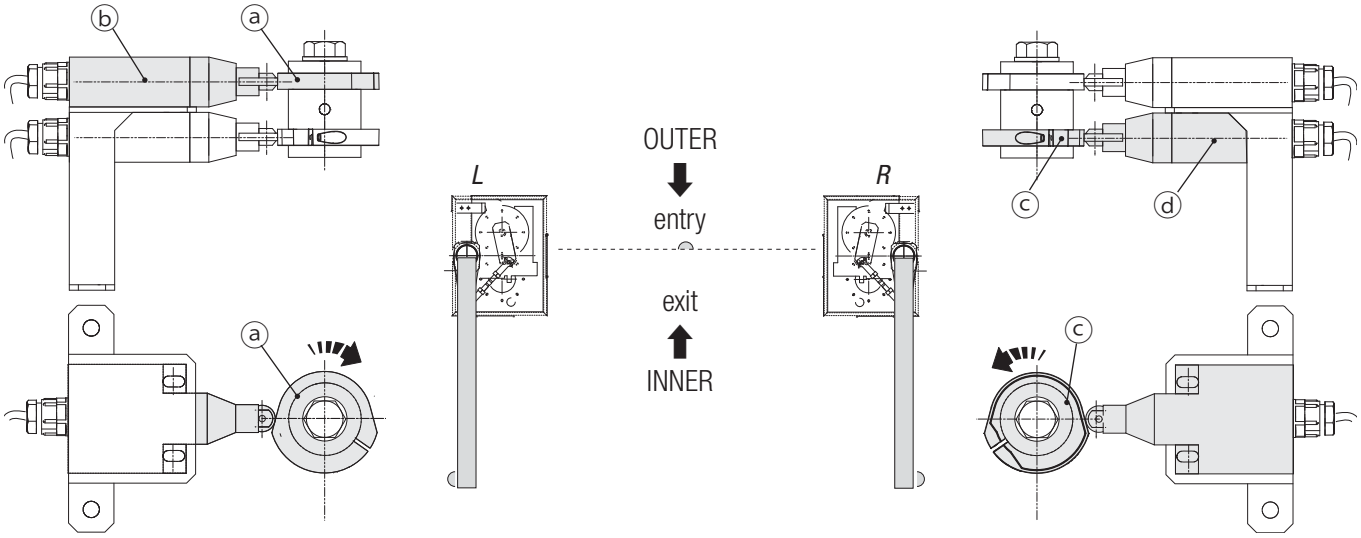

For closing:

- completely shut the leaves;
- turn the left-hand gearmotor cam counter-clockwise ⓐ until the micro switch engages ⓑ;
- turn the right-hand gearmotor cam clockwise ⓒ until the micro switch engages ⓓ;

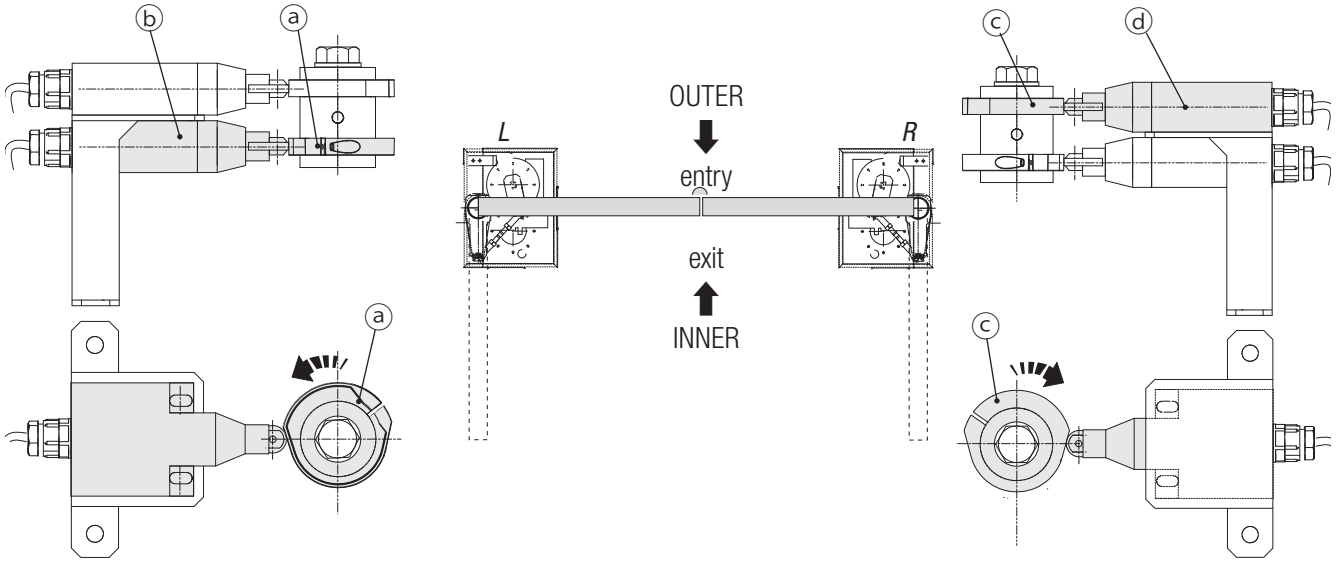

 © CAME S.p.A. - The data and information provided in this manual are subject to change at any time without prior notice by CAME S.p.A.

www.metalines.com Polydon Industries Ltd, Polydon Park, Radiance Road, Doncaster, South Yorkshire DN1 2TE | Tel: 01302 327172 | Fax: 01302 380124 sales@metalines.com

Three-phase 400 V power supply

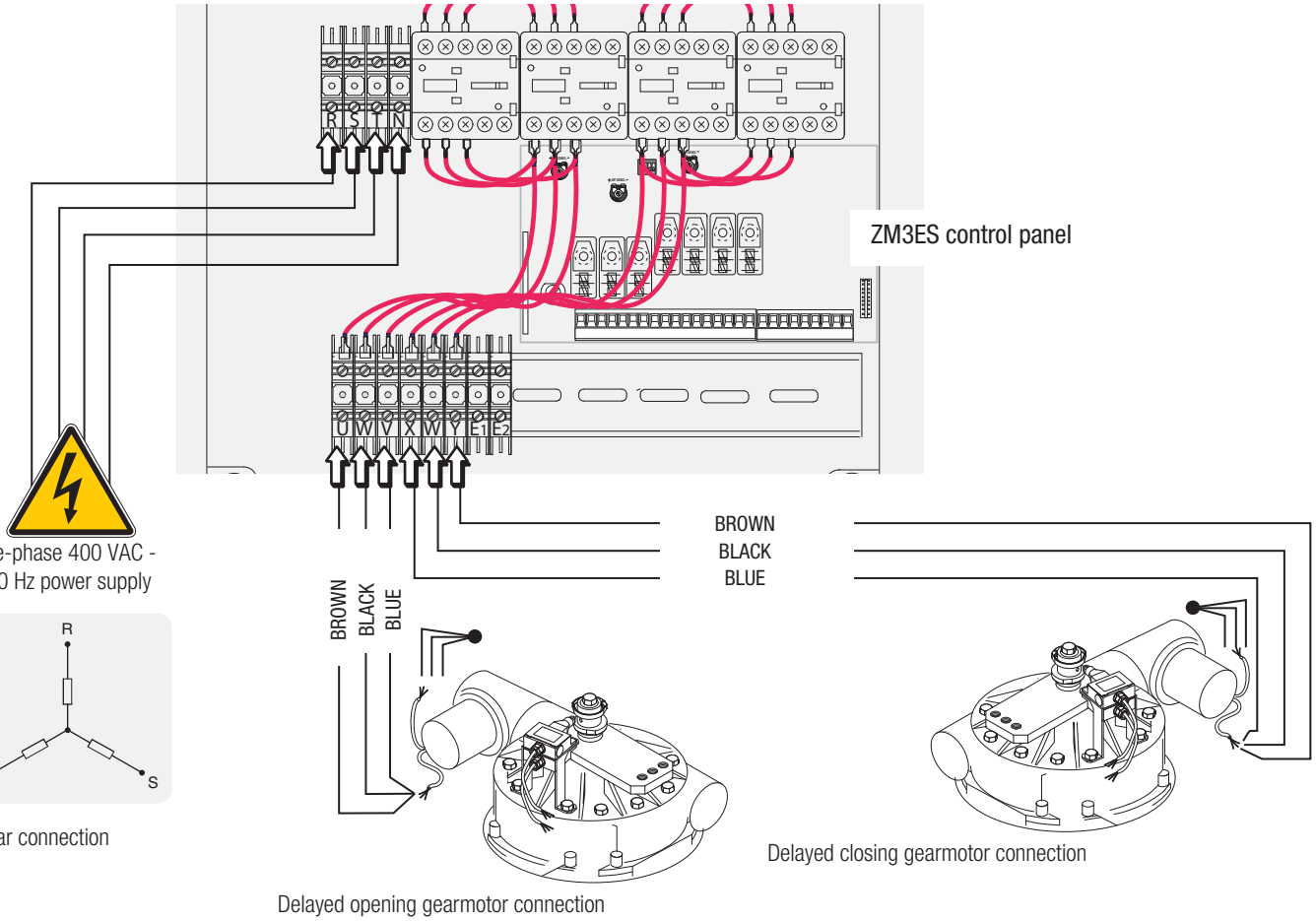

Three-phase 230 V power supply

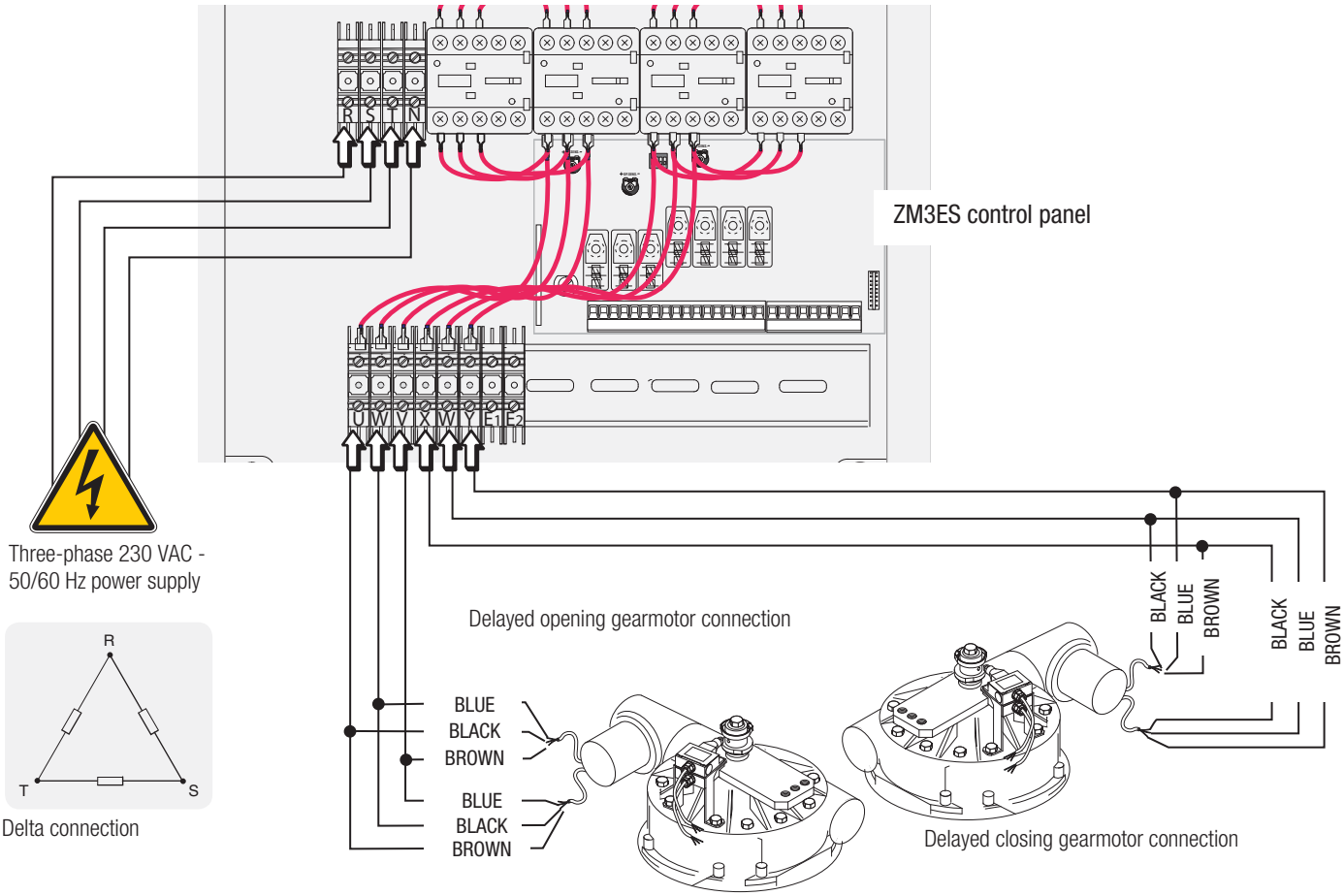

Page 11 - Manual code: 119AU03EN vers. 5 03/2016 © CAME S.p.A. - The data and information provided in this manual are subject to change at any time without prior notice by CAME S.p.A.

1) Connecting the open end run to the delayed opening gearmotor.

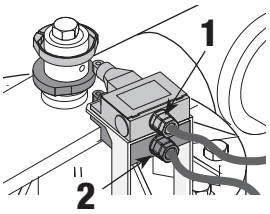

2) Connecting the close end run to the delayed opening gearmotor.

3) Connecting the close end run to the delayed closing gearmotor.

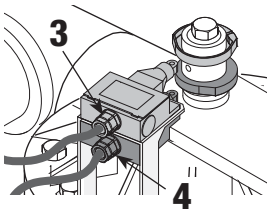

4) Connecting the open end run to the delayed closing gearmotor.

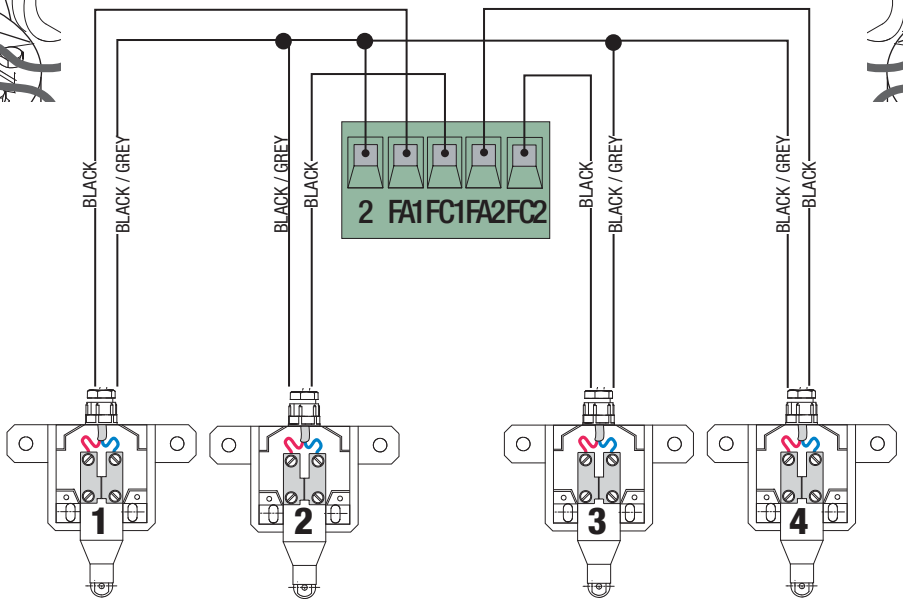

🕮 On the control panel, select and confirm <end stop> from the Configuration feature.

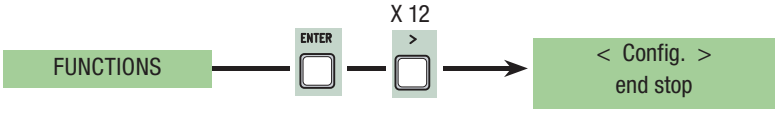

Make sure that the <end stop> feature is configured to N.C.

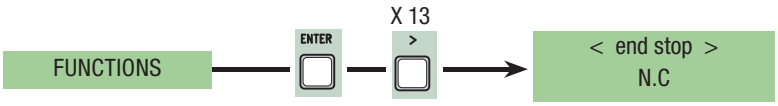

FINAL OPERATIONS

Securing the cover

Rest the cover on the foundation box, secure the hole cover and insert the cap on the cover.

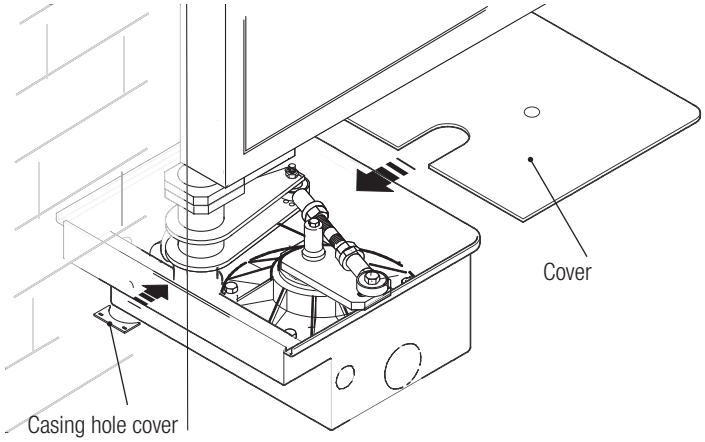

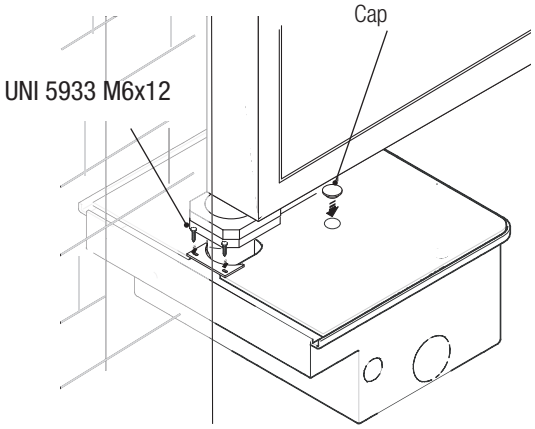

Page 12 - Manual code: 119AU03EN vers. 5 03/2016 © CAME S.p.A. - The data and information provided in this manual are subject to change at any time without prior notice by CAME S.p.A.

INSTALLING AND CONNECTIONS FOR OUTWARD-OPENINGS

Below are the only procedures that vary compared to standard installations:

N.B. the arms have several holes in order to obtain various opening angles for the leaves.

90° OPENING

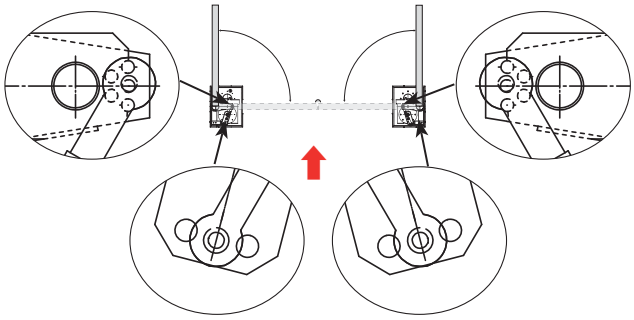

95° OPENING

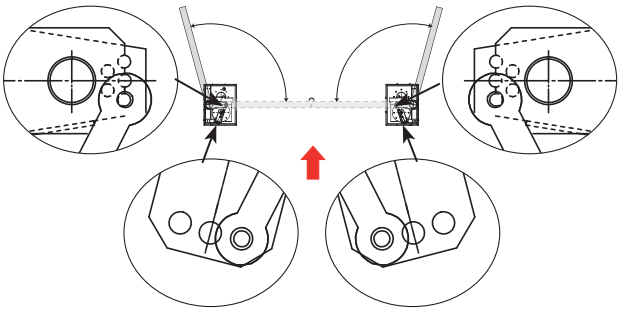

Establishing the limit-switch points

For opening:

- completely open the leaves;
- turn the left-hand gearmotor cam counter-clockwise ⓐ until the micro switch engages ⓑ;
- turn the right-hand gearmotor cam clockwise ⓒ until the micro switch engages ⓓ;

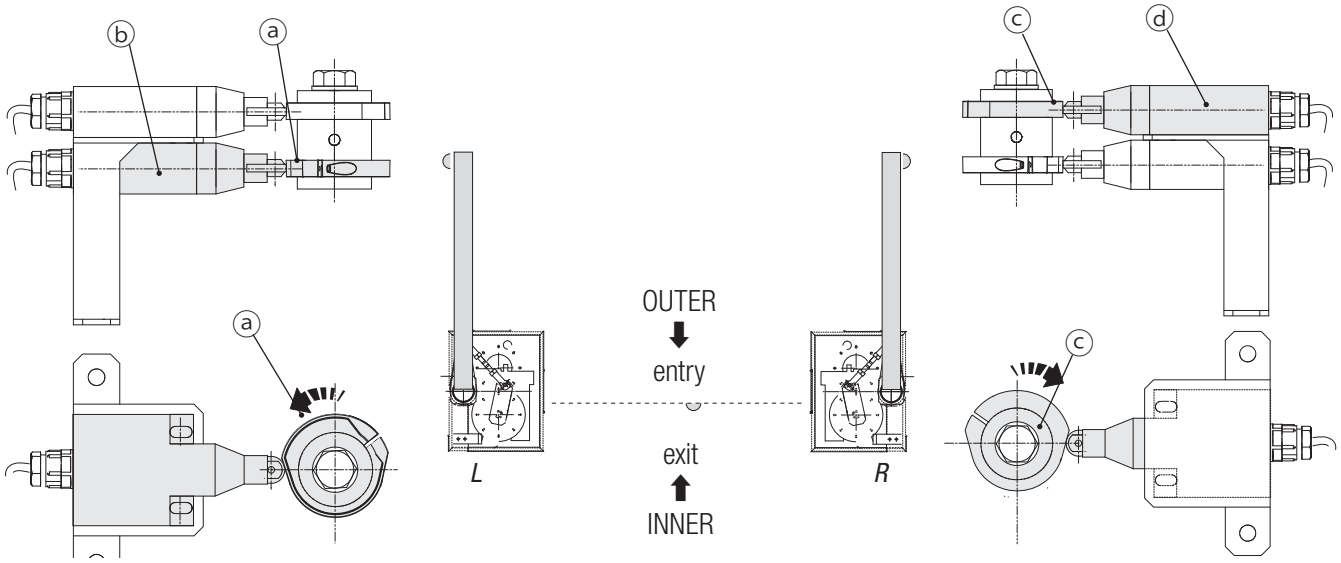

For closing:

- completely shut the leaves;
- turn the left-hand gearmotor cam clockwise ⓐ until the micro switch engages ⓑ;
- turn the right-hand gearmotor cam counter clockwise ⓒ until the micro switch engages ⓓ.

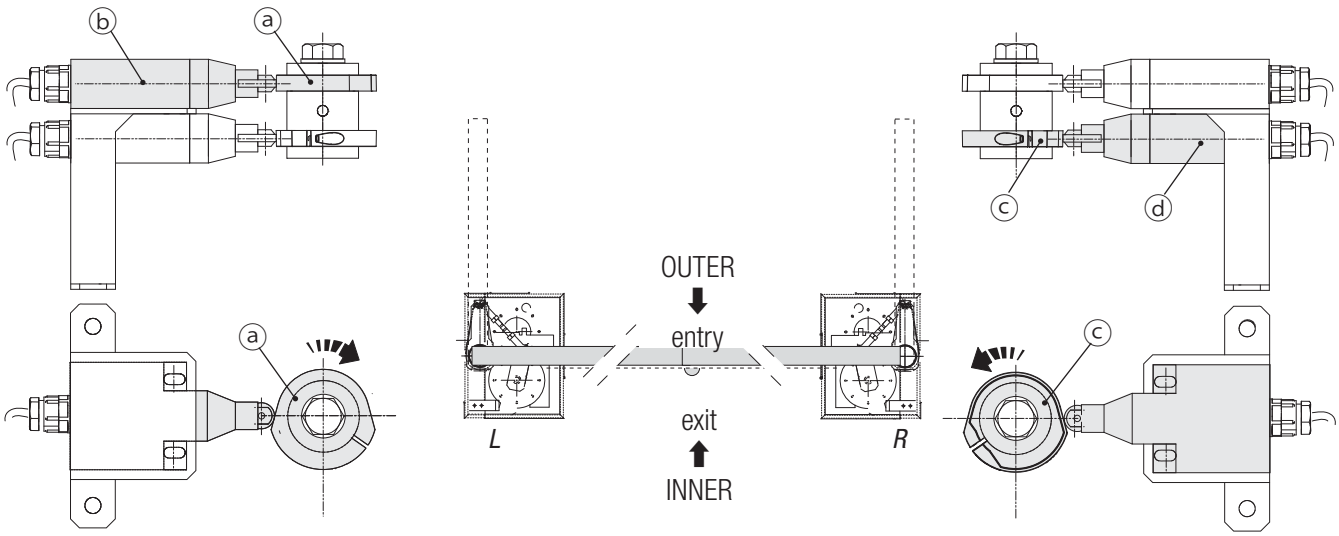

Page 13 - Manual code: **119AU03EN** vers. **5** 03/2016 © CAME S.p.A. - The data and information provided in this manual are subject to change at any time without prior notice by CAME S.p.A.

MAINTENANCE

☞Before any maintenance, disconnect power to prevent any possible dangerous situations that can be caused by accidental movement of the operator.
Lubricate the pivot points with grease whenever abnormal vibrations or squeaking occurs, as shown below.

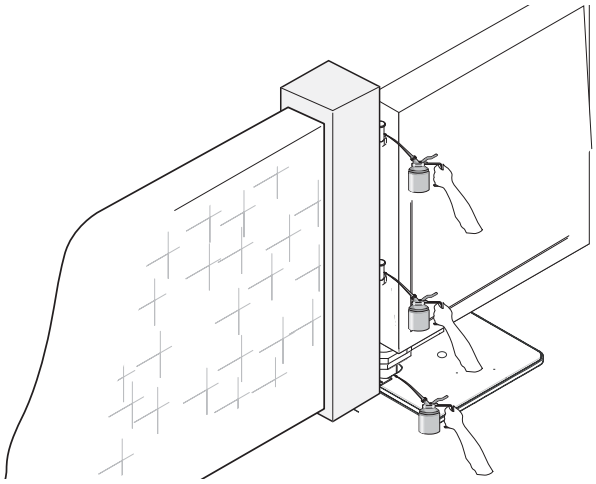

Periodic maintenance

Periodic maintenance log to be completed by the user (every six months)

Date	Notes	Signature

Extraordinary maintenance

⚠The table below is used to note any extraordinary maintenance, repairs or improvements carried out by specialist companies.
⚠ Extraordinary maintenance must be carried out by specialist technicians.

Extraordinary maintenance log

Installation technician stamp	Operator name
	Date of intervention
	Technician signature
	Customer signature
Intervention carried out _____	

 © CAME S.p.A. - The data and information provided in this manual are subject to change at any time without prior notice by CAME S.p.A.

www.metalines.com Polydon Industries Ltd, Polydon Park, Radiance Road, Doncaster, South Yorkshire DN1 2TE | Tel: 01302 327172 | Fax: 01302 380124 sales@metalines.com

Installation technician stamp	Operator name
	Date of intervention
	Technician signature
	Customer signature
Intervention carried out _____	

Installation technician stamp	Operator name
	Date of intervention
	Technician signature
	Customer signature
Intervention carried out _____	

TROUBLESHOOTING

MALFUNCTIONS	POSSIBLE CAUSES	CHECKS AND REMEDIES
The gate does not open or close	• No power • The gearmotor is unlocked • The transmitter battery is flat • The transmitter is broken • The stop button is stuck or broken • The opening/closing button or the key selector switch are stuck	• Check for mains power • Lock the gearmotor • Replace the batteries • Contact service • Contact service • Contact service
The gate opens but does not close	• The photocells are engaged	• Make sure that the photocells are clean and work correctly • Contact service

DISMANTLING AND DISPOSAL

☞CAME S.p.A. implements an EN ISO 14001 certified and compliant Environmental Management System at its plants, to ensure environmental protection.
Please continue our efforts to protect the environment, something that CAME considers to be one of the foundations in developing its business and market strategies, simply by observing brief recommendations as regards disposal:

⚽ DISPOSAL OF PACKAGING

Packaging components (cardboard, plastic etc.) can be disposed of together with normal household waste without any difficulty, by simply separating the different types of waste and recycling them.
Before proceeding, it is always advisable to check specific regulations in force in the place of installation.
DISPOSE OF PROPERLY!

⚽ DISPOSAL OF THE PRODUCT

Our products are made with different materials. Most of them (aluminium, plastic, iron, electrical cables) can be disposed of together with normal household waste. They can be recycled if collected, sorted and sent to authorised centres.
Other components (circuit boards, transmitter batteries etc.), on the other hand, may contain pollutants.
They should therefore be removed and handed over to companies authorised to recover and recycle them.
Before proceeding, it is always advisable to check specific regulations in force in the place of disposal.
DISPOSE OF PROPERLY!

DECLARATION OF CONFORMITY

CE Declaration - CAME S.p.A. declares that this device complies with the essential requirements and other relevant provisions established in Directives 2006/42/EC and 2004/108/EC.

Reference code for requesting a true copy: DDI B IT A003

© CAME S.p.A. - The data and information provided in this manual are subject to change at any time without prior notice by CAME S.p.A.

www.metalines.com Polydon Industries Ltd, Polydon Park, Radiance Road, Doncaster, South Yorkshire DN1 2TE | Tel: 01302 327172 | Fax: 01302 380124 sales@metalines.com

IT • Per ogni ulteriore informazione su azienda, prodotti e assistenza nella vostra lingua:

EN • For any further information on company, products and assistance in your language:

FR • Pour toute autre information sur la société, les produits et l'assistance dans votre langue :

DE • Weitere Infos über Unternehmen, Produkte und Kundendienst bei:

ES • Por cualquier información sobre la empresa, los productos y asistencia en su idioma:

NL • Voor meer informatie over het bedrijf, de producten en hulp in uw eigen taal:

PT • Para toda e qualquer informação acerca da empresa, de produtos e assistência técnica, em sua língua:

PL • Wszystkie inne informacje dotyczące firmy, produktów oraz usług i pomocy technicznej w Waszym języku znajdują się na stronie:

RU • Для получения дополнительной информации о компании, продукции и сервисной поддержке на вашем языке:

HU • A vállalatra, termékeire és a műszaki szervizre vonatkozó minden további információért az Ön nyelvén:

HR • Za sve dodatne informacije o poduzeću, proizvodima i tehničkoj podršci na vašem jeziku:

UK • Для отримання будь-якої іншої інформації про компанію, продукцію та технічну підтримку:



*English - Manual code: **119AU03EN** vers. **5** 03/2016 © CAME S.p.A.*
The data and information provided in this manual are subject to change at any time without prior notice by CAME S.p.A.

CAME
safety&comfort

CAME Cancelli Automatici S.p.A.
Via Martiri Della Libertà, 15
31030 **Dosson Di Casier** (Tv)
(+39) 0422 4940
(+39) 0422 4941
Assistenza Tecnica/Numero Verde 800 295830

www.metalines.com Polydon Industries Ltd, Polydon Park, Radiance Road, Doncaster, South Yorkshire DN1 2TE | **Tel:** 01302 327172 | **Fax:** 01302 380124 sales@metalines.com