CAME

CE

319T90EN

CONTROL PANEL
FOR 230 V - 400 V GEARMOTORS

Official Partner

EXPO

MILANO 2015

FEEDING THE PLANET
ENERGY FOR LIFE



INSTALLATION MANUAL

ZT6 - ZT6C

English EN

ISTITUTO PER LA TUTELA DEI PRODUTTORI ITALIANI

www.metalines.com Polydon Industries Ltd, Polydon Park, Radiance Road, Doncaster, South Yorkshire DN1 2TE | Tel: 01302 327172 | Fax: 01302 380124 sales@metalines.com

"IMPORTANT INSTALLATION SAFETY INSTRUCTIONS"

"WARNING: IMPROPER INSTALLATION MAY RESULT IN SERIOUS HARM. PLEASE FOLLOW ALL INSTALLATION INSTRUCTIONS"

"THIS MANUAL IS INTENDED ONLY FOR PROFESSIONAL INSTALLERS OR OTHER COMPETENT INDIVIDUALS"

ENGLISH

1 Legend of symbols

This symbol shows parts which must be read with care.

This symbol means the parts which describe safety issues.

This symbol tells you what to tell the end-user.

2 Intended use and limits to use

2.1 Intended use

The ZT6 - ZT6C control panel is engineered by Came Cancelli Automatici S.p.A. for commanding 001BK-2200T sliding gates as well as 001C-BXT sectional, sliding and folding door operators.

Any installation and use other than that specified in this manual is forbidden.

2.2 Limitations to use

The overall power of the gearmotor when connected must not exceed 780 W.

3 Reference standards

Came Cancelli Automatici employs an ISO 9001 certified quality management system and an ISO 14001 environmental management system. Came only engineers and manufactures in Italy.
This product is compliant with: *see statement of compliance.*

4 Description

Single and tri-phase 230 V AC or 400 V AC tri-phase power supply. The control panel is protected by a 8 A fuse, while the low voltage accessories (24 V) are protected by a 2 A fuse.

The ZT6C control panel comes with safety block and 3-hard wired buttons (stop, open, close) on the case cover.

Warning! The overall power of the 24 V accessories must not exceed 20 W.

The card provides and controls the following features:

- automatic closing;
- partial opening for pedestrian passage;
- obstacle detections when gate is not moving at any point;
- maintained action;
- Pre flashing by the flashing light;
- Running the safety test feature.

The available command modes are:

-opening/closing;

-opening/closing with maintained action;

- open-stop-close-stop;
- Partial opening;
- total stop.

The photocells, after detecting an obstacle, may trigger:

- the reopening of the closing gate;
- the reclosing of the opening gate;
- a partial stop;
- a total stop.

Specific trimmers regulate:

- the working time for automatic closing;
- the partial opening time.

You can also connect:

- a courtesy lamp to light up the driving area for a set time;
- a lamp to light up the driving area during the open/close cycles.

TECHNICAL DATA	
Power supply	230 V / 400 V - 60 Hz
Maximum power rating	780 W
Power draw when idle	50 mA
Maximum power for 24 V accessories	45 W
Maximum power for 230 V accessories	85 W
Circuit insulation class	⧈
Container material	ABS
Protection rating of the container	IP54
Working temperature	- 20 / +55°C

FUSE TABLE	
to protect:	**fuses for:**
Electronic board (line)	A 8
Accessories	A 2
Command devices (control unit)	A 630

 © CAME Cancelli Automatici S.p.A. - The data and information in this manual may be changed at any time and without obligation on the part of Came Cancelli Automatici S.p.A. to notify said changes.

www.metalines.com Polydon Industries Ltd, Polydon Park, Radiance Road, Doncaster, South Yorkshire DN1 2TE | Tel: 01302 327172 | Fax: 01302 380124 sales@metalines.com

4.1 Dimensions

ZTC overall dimensions

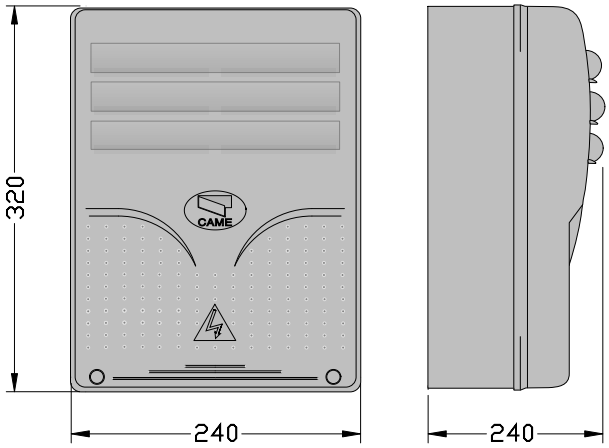

ZT6C case overall dimensions

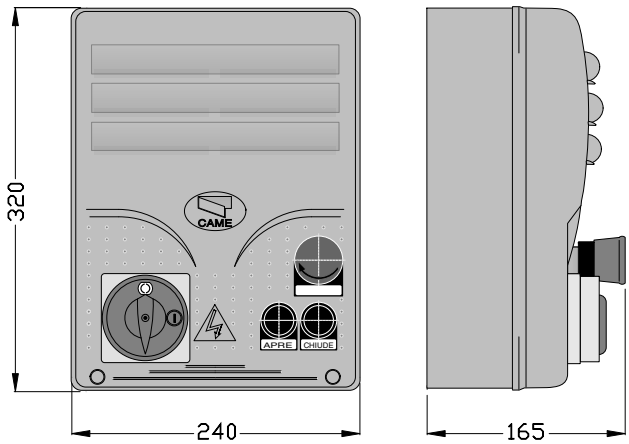

4.2 Main components

1. Dip-switch *selecting features*
2. Control panel fuse 630mA F
3. Accessories fuse 2 A F
4. Line fuse 8 A F
5. AF radio frequency card socket
6. Power supply LED-signal light
7. Radio code notification LED light
8. Connecting terminals
9. Transformer connection terminals
10. Buttons to memorise radio code
11. Trimmer TCA: adjusting automatic closing time
12. PART. OPEN TRIMMER.: adjusting open-partially

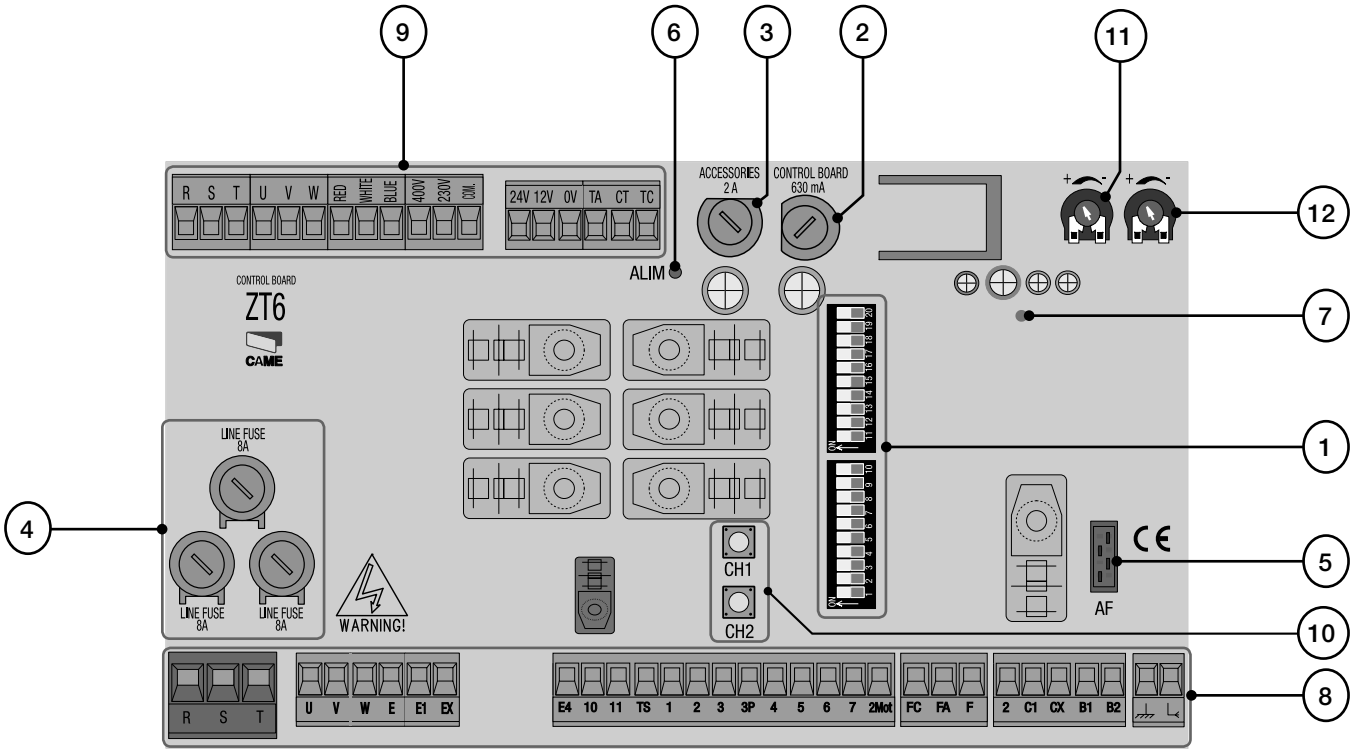

Warning! Before acting on the device, cut off the main power supply.
Just operate the safety block on the ZT6C.

 © CAME Cancelli Automatici S.p.A. - The data and information in this manual may be changed at any time and without obligation on the part of Came Cancelli Automatici S.p.A. to notify said changes.

www.metalines.com Polydon Industries Ltd, Polydon Park, Radiance Road, Doncaster, South Yorkshire DN1 2TE | **Tel:** 01302 327172 | **Fax:** 01302 380124 sales@metalines.com

5 Installation

5.1 Preliminary checks

⚠ Before beginning to install, the following is necessary:

- Make sure that the point where the electrical panel is anchored is free from any impacts, and that the surface is solid and that proper tools and materials are used (i.e. screws, wall plugs, etc.).
- Set up a suitable omni polar cut-off device, with distances greater than 3 mm between contacts, with sectioned power source.
- ⏚ Check that any connections inside the container (made for continuity purposes of the protective circuit) are fitted with extra insulation compared to other internal conductive parts.
- Set up proper conduits and electric cable raceways, making sure these are protected from any mechanical damage.

5.2 Tools and equipment

Make sure you have all the tools and materials needed to carry out the installation in total safety and in accordance with current regulations. Here are some examples.



5.3 Fastening and mounting the container

1) Secure the base of the panel in a safe area; yes max. 6 mm Head with to.

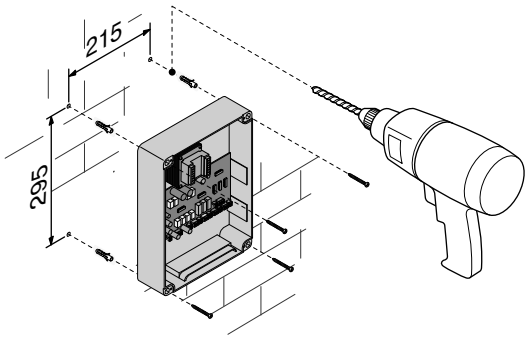

2) Perforate the pre-punched holes and insert the cable glands with corrugated tubes for the electrical cables to run through.

N.B.: the pre-punched holes have 20 mm diameter.

Careful not to damage the electronic board inside the panel!

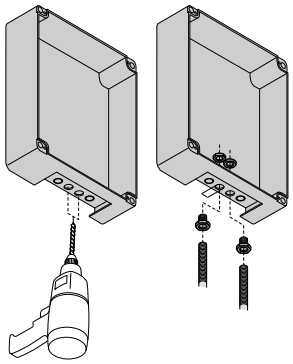

Assemble the pressure hinges.

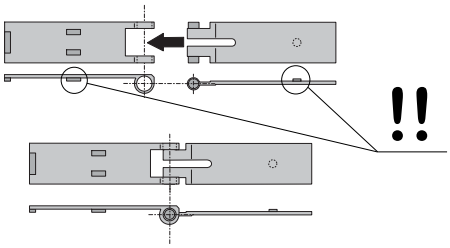

4) insert the hinges into the housing (either left or right) and secure them using the issued screws and washers.

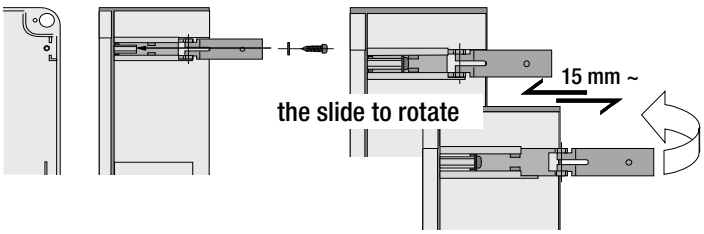

5) Snap the cover onto the hinges.

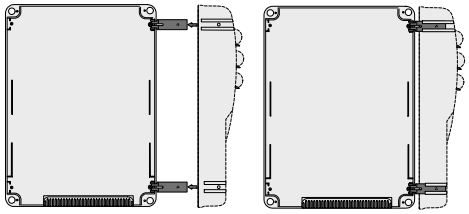

6) After adjusting and setting, secure the cover using the issued screws.

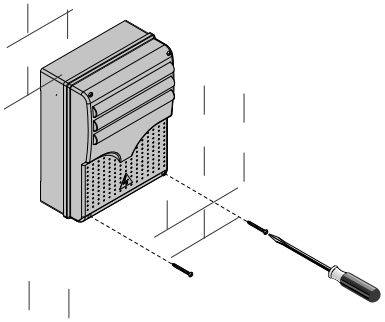

p. 4 - Manual code: 319T90 ver. 3 04/2014 © CAME Cancelli Automatici S.p.A. - The data and information in this manual may be changed at any time and without obligation on the part of Came Cancelli Automatici S.p.A. to notify said changes.

6 Electrical connections of the ZT6

Gearmotor

Tri-phase 400 V AC motor

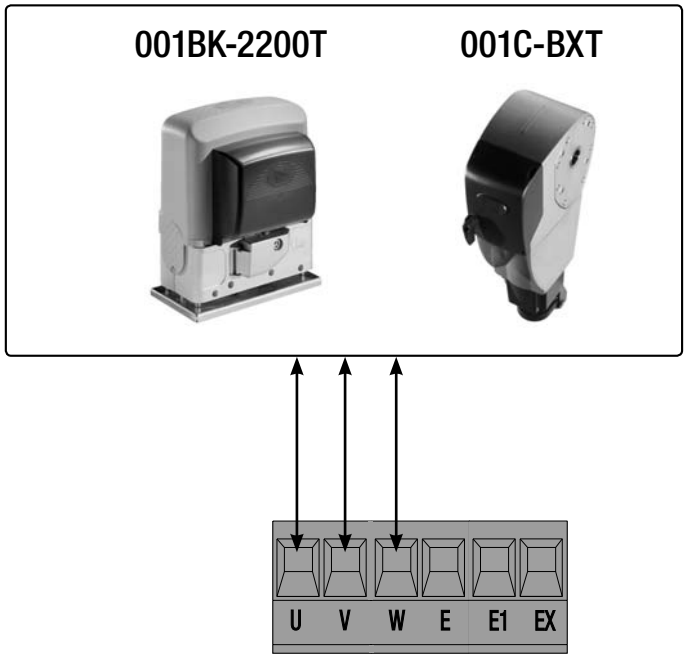

Power supply

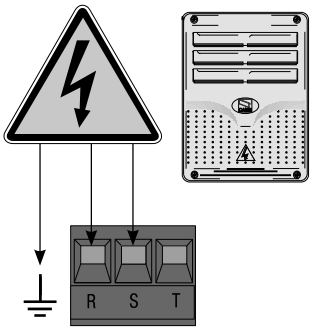

Control panel is 230 V AC single-phase powered

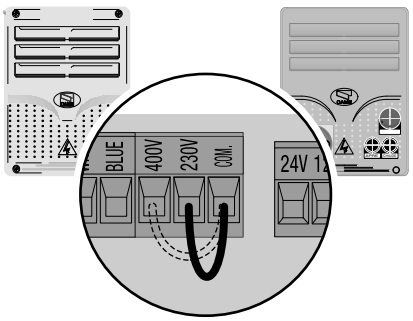

If the control panel is powered by 230V (single or three-phase), move the short-circuit bridge connection as shown.

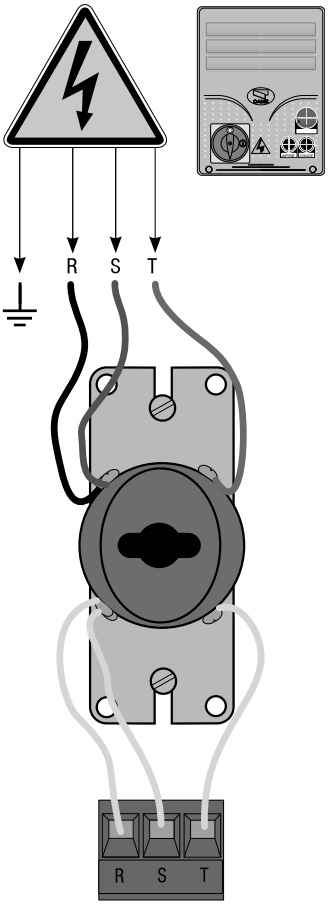

Control panel is 230 - 400 V AC Tri-phase powered



Terminals for powering the 24V AC accessories. **Overall allowed power: 45 W**

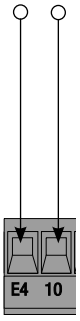

'Moving' 24 V AC output
Overall allowed power: 45 W

ENGLISH

p. 5 - Manual code: 319790 ver. 3 04/2014 © CAME Cancelli Automatici S.p.A. - The data and information in this manual may be changed at any time and without obligation on the part of Came Cancelli Automatici S.p.A. to notify said changes.

Lighting and warning devices

Cycle/courtesy lamp (Contact capacity: 230 V - 60 W max.)



With dip switch 16 set to OFF and dip switch 17 set to ON = Cycle lamp.
Lights the area of operation. It remains on from the start of gate opening to complete closing (including the automatic closing time).



With dip switch 16 set to ON and dip switch 17 set to OFF = Courtesy lamp.
Lights the area of operation; stays on for a set time of 330 seconds after an opening command.

Flashing light (contact rated for: 230V AC - 25W Max.)
Flashes while gate opens and closes.

Gate open warning light Contact rated for: 24 V - 3 W Max.)
Indicates that gate is open.

Gate open warning light Contact rated for: 24 V - 3 W Max.)
Indicates that gate is closed.

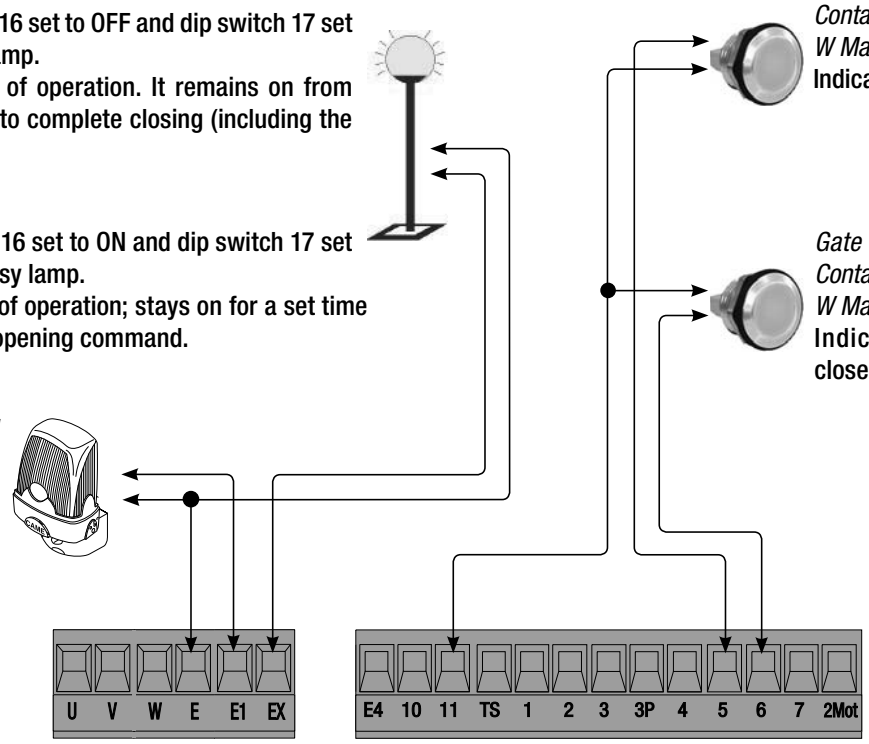

Command devices

*Stop button (**(N.C.) contact**)*
Gate stop button that excludes automatic closing, to resume movement press command or transmitter button.
If unused, set DIP-switch 10 to ON.

Key switch selector and/or opening button (***N.O. contact***)
Opening command

Key switch selector and/or opening button (***N.O. contact***)
Partial opening for pedestrian passage. The opening time can be adjusted via the PART. OPEN. The automatic closing time is adjustable via DIP-switch 12.

Key switch selector and/or opening button (***N.O. contact***)
Closing command.

Key switch selector and/or command button (***N.O. contact***)
Gate opening and closing commands, pressing the button or turning the key switch selector, the gate inverts its movement or stops depending on selection made on the DIP switches (see selecting functions, DIP switches 2-3)

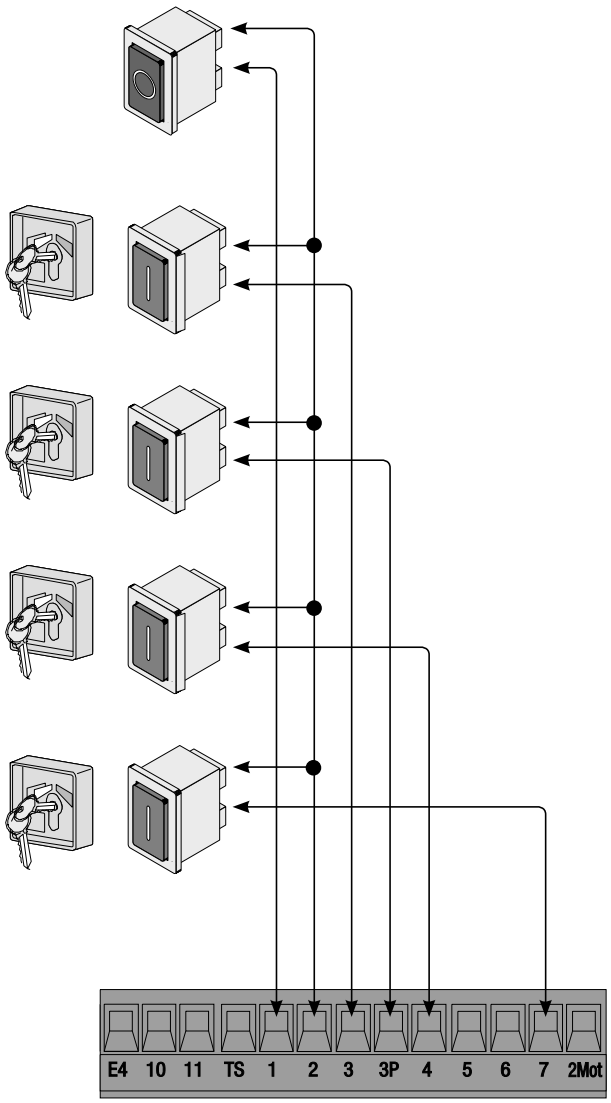

p. 6 - Manual code: 319T90 ver. 3 04/2014 © CAME Cancelli Automatici S.p.A. - The data and information in this manual may be changed at any time and without obligation on the part of Came Cancelli Automatici S.p.A. to notify said changes.

C1 = Contact (N.C.) for reopening during closing.
Input for safety devices such as photocells, sensitive edges and other devices compliant with the EN 12978 standard.
While the operator is closing, the opening of the contact causes the reversal of the direction of movement until completely open.
If C1 is not used, set dip switch 7 to ON.

CX with dip switch 8 and dip switch 9 OFF = Contact (N.C.) for reclosing during opening.
Input for safety devices such as photocells, sensitive edges and other devices compliant with the EN 12978 standard.
While the operator is opening, the closing of the contact causes the reversal of the direction of movement until completely closed.

CX with dip switch 8 OFF and dip switch 9 ON = Contact (N.C.) for partial stop.
Input for safety devices such as photocells, sensitive edges and other devices compliant with the EN 12978 standard.
Stops the operator, if it is moving, and then sets automatic closing.
If CX is not used, set dip switch 8 to ON.

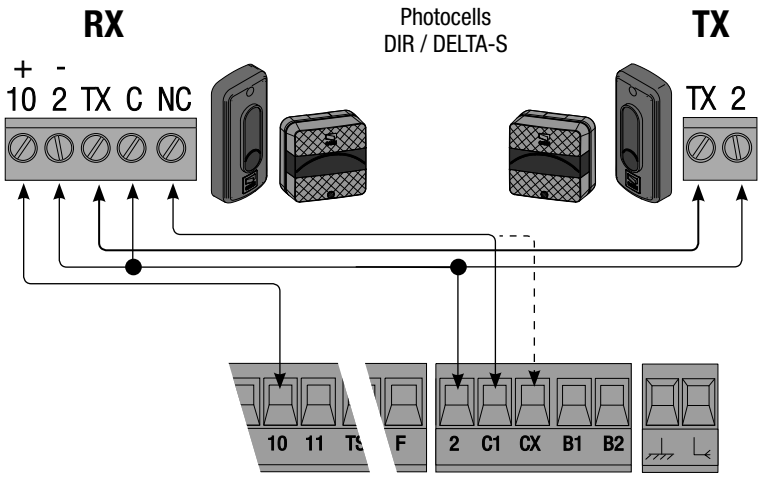

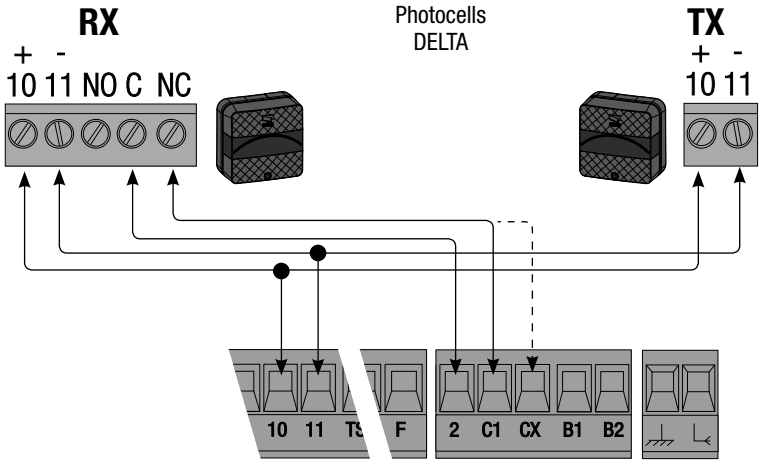

Photocell safety connection

With each opening or closing command, the panel checks that the photocells work. Any anomaly inhibits any command.
Set dip switch 13 to ON.

DELTA

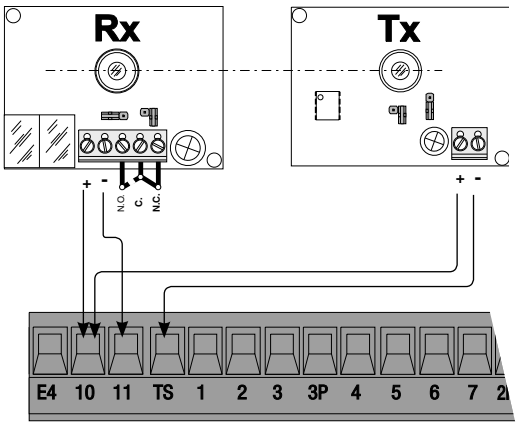

DIR / DELTA S

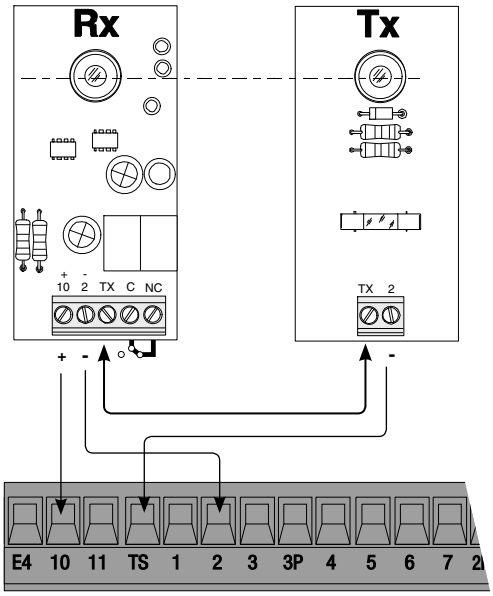

p. 7 - Manual code: 319T90 ver. 3 04/2014 © CAME Cancelli Automatici S.p.A. - The data and information in this manual may be changed at any time and without obligation on the part of Came Cancelli Automatici S.p.A. to notify said changes.

www.metalines.com Polydon Industries Ltd, Polydon Park, Radiance Road, Doncaster, South Yorkshire DN1 2TE | Tel: 01302 327172 | Fax: 01302 380124 sales@metalines.com

7 Selecting features

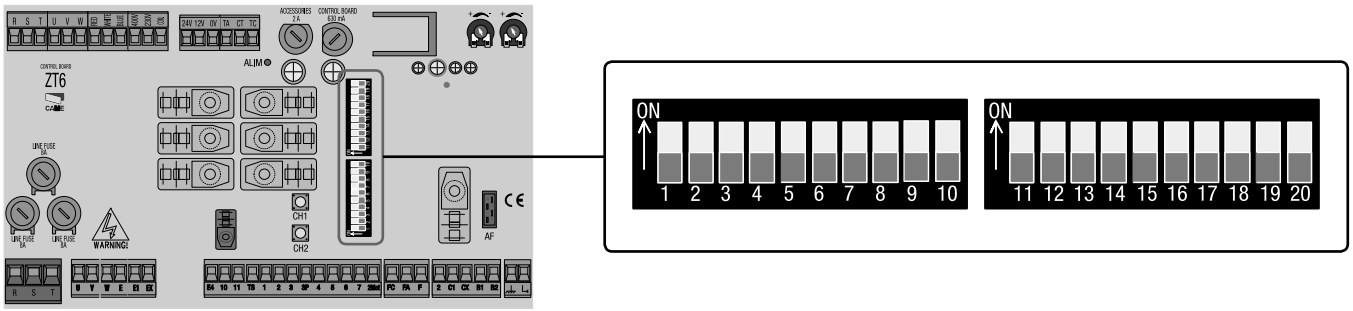

1 ON	-	Automatic closing feature activated; (1OFF - deactivated)
2 ON	-	Open-stop-close-stop with button (2-7) and transmitter (AF card fitted) feature activated
2 OFF	-	Open-closewith (2-7) button and radio transmitter (AF card fitted) feature activated
3 ON	-	Open onlywith transmitter (AF card fitted) feature activated; (3 OFF - deactivated)
4 ON	-	Feature **maintained action** activated; (4OFF - deactivated)
5 ON	-	Pre flashing activated during opening and closing; (5 OFF - deactivated)
6 ON	-	Obstacle detection feature activated; (6 OFF - deactivated)
7 OFF	-	Reopen while closing (connect safety device on terminals 2-C1) feature activated; (7 ON - deactivated)
8 OFF / 9 OFF	-	**Reclose while opening** (connect safety device on terminals 2-CX) feature terminals
8 OFF / 9 ON	-	**Partial stop**(connect the safety device on terminals 2-CX) feature activated; (if the devices on 2-CX are unused, set DIP switch 8 to ON)
10 OFF	-	**Total stop**(connect buttons on 1-2) feature activated; (10 ON - deactivated)
11	-	Unused, keep DIP switch on **OFF**
12 ON	-	**Partial opening** (automatic closing is set to 8") feature activated
12 OFF	-	**Partial opening feature** (automatic closing is adjustable with the trimmer, if inserted) activated
13 ON	-	**Safety test** to check photocell efficiency feature activated; (13 OFF - deactivated)
14	-	Unused, keep DIP switch on **OFF**
15	-	Unused, keep DIP switch on **OFF**
16 ON	-	Feature **courtesy lamp activated**; (16 OFF - deactivated)
17 ON	-	Feature **Cycle lamp activated** ; (17 OFF - deactivated)
18 ON	-	Activate closing brake feature. **Use only with the CBX and CBXT operators**
19	-	disconnected
20	-	disconnected

8 Settings

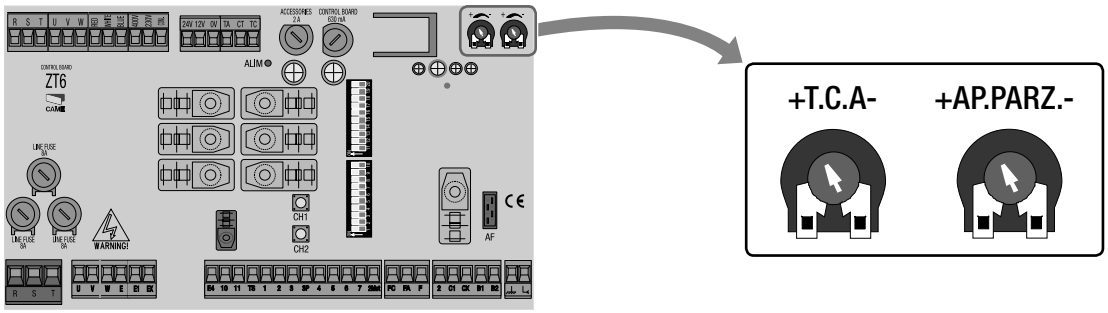

Trimmer T.C.A.	Adjusting automatic closing time from a minimum of 1 second to a maximum of 120 seconds.
PART. OPEN TRIMMER	Adjusting partial opening from a minimum of 1 seconds to a maximum of 14 seconds.

p. 8 - Manual code: 319T90 ver. 3 04/2014 © CAME Cancelli Automatici S.p.A. - The data and information in this manual may be changed at any time and without obligation on the part of Came Cancelli Automatici S.p.A. to notify said changes.

9 Connecting two control panels for control of a pair of gearmotors

With two coupled gearmotors, you can command only the opening (by button and/or radio control): the gate will close only in automatic closing mode.

1 Coordinate the direction of travel of the two gearmotors A and B, by modifying the motor's rotation B (invert the cables on terminals FA-FC and U-V).

2 Make the electrical connections only on the motor's control board A. Whereas, the adjustments and features, must be made on both boards.

3 Connect the two boards together, as illustrated. Set DIP 1 and 3 to ON on both boards.

4 Fit the AF board only into the gearmotor's board A.

The transmitter button for opening a gate must be memorized on the gearmotor's channel CH1 A. The transmitter button for opening both gates must be memorized on the gearmotor's channel CH2 A.

ENGLISH

1

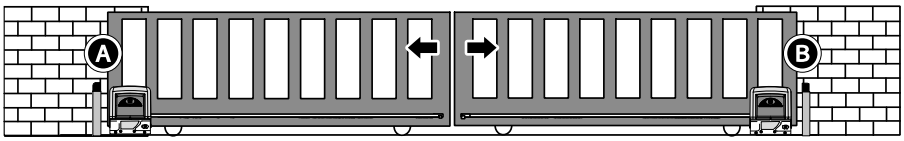

2

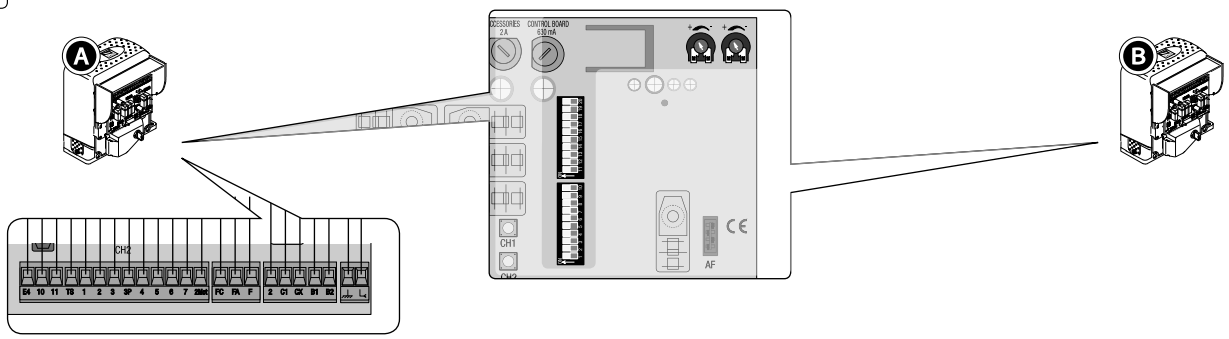

3

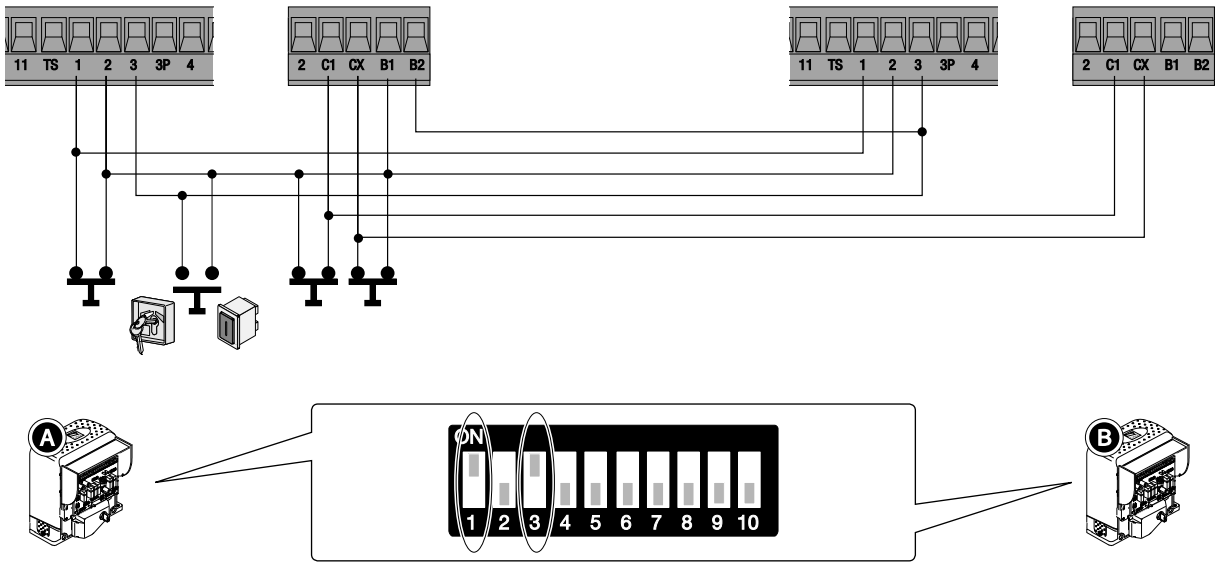

4

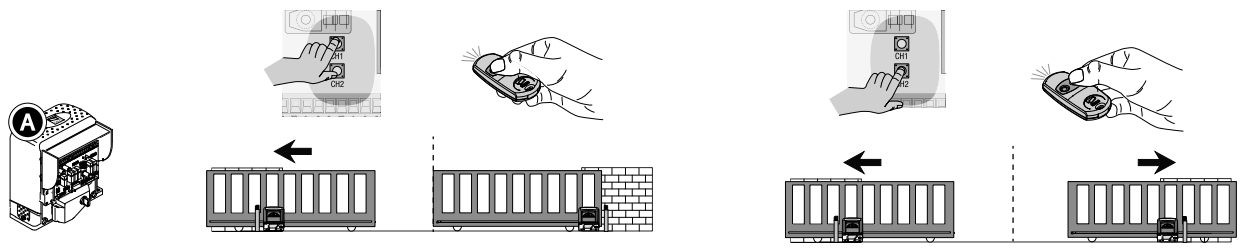

 © CAME Cancelli Automatici S.p.A. - The data and information in this manual may be changed at any time and without obligation on the part of Came Cancelli Automatici S.p.A. to notify said changes.

www.metalines.com Polydon Industries Ltd, Polydon Park, Radiance Road, Doncaster, South Yorkshire DN1 2TE | Tel: 01302 327172 | Fax: 01302 380124 sales@metalines.com

10 Activating the radio command

Connect the antenna RG58 cable to the terminals and any accessory to connect to the B1-B2 output (N.O. contact) ❶.

For the AF43S / AF43SM radiofrequency cards only, position the jumper as shown according to the series of transmitters used ❷.

DISCONNECT POWER AND REMOVE THE BATTERIES, IF PRESENT. Insert the AF card on the control board.
N.B. the control board only recognises the AF card when the operator is powered again❸.

Hold down the CH1 key on the control board: the LED indicator flashes. Press a key on the transmitter to send the code. The LED will remain lit to indicate SUCCESSFUL memorisation ❹.

Follow the same procedure with the CH2 key, associating it with another transmitter key ❺.

CH1 = channel for direct control of a panel function (OPEN ONLY, OPEN-CLOSE-REVERSE or OPEN-STOP-CLOSE-STOP, according to the selection made on dip switches 2 and 3).
CH2 = channel for commands directed to an accessory device connected on B1-B2 or for connecting two coupled motors having a single command.

ENGLISH

❶

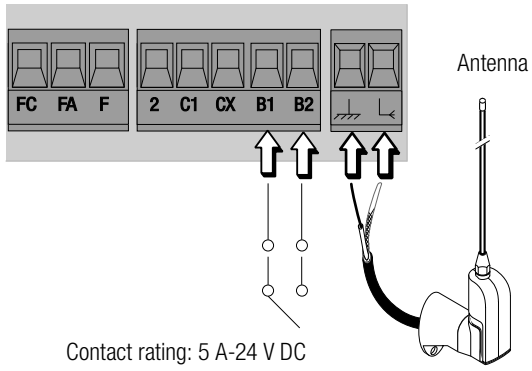

❷

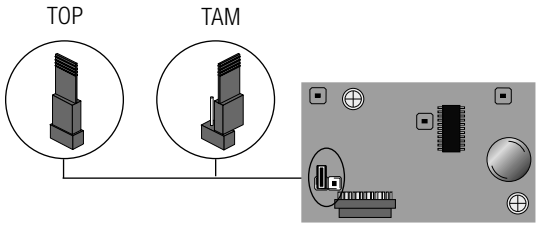

❸

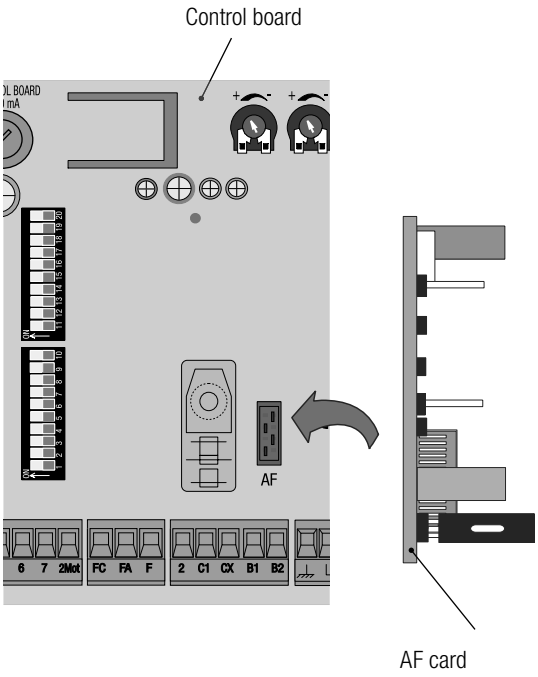

❹

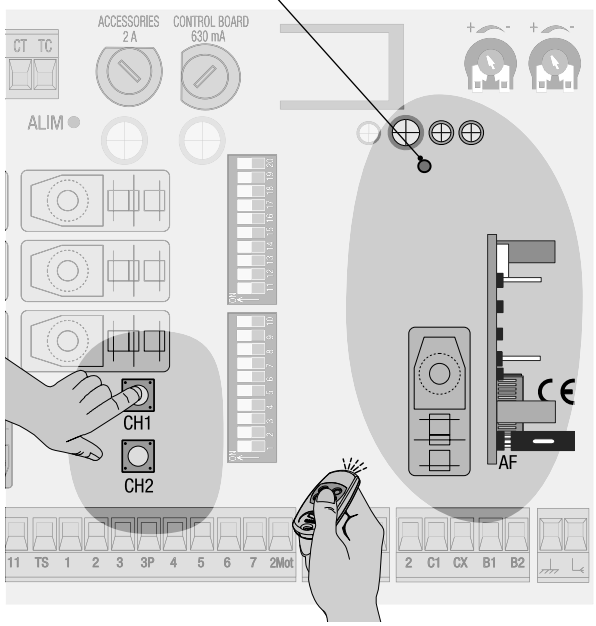

❺

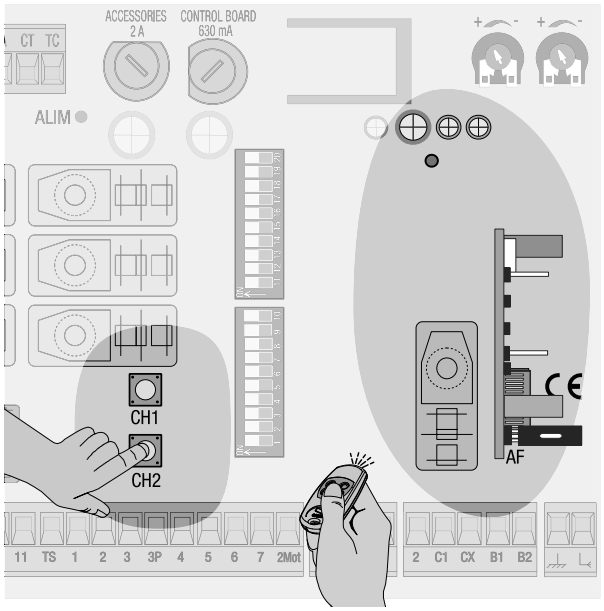

p. 10 - Manual code: 319T90 ver. 3 04/2014 © CAME Cancelli Automatici S.p.A. - The data and information in this manual may be changed at any time and without obligation on the part of Came Cancelli Automatici S.p.A. to notify said changes.

11 Dismantling and disposal

On its premises, CAME Cancelli Automatici S.p.A. implements a certified Environmental Management System in compliance with the UNI EN ISO 14001 standard to ensure environmental protection.
Please help us to safeguard the environment. At CAME we believe this to be one of the fundamentals of our market operations and development strategies. Just follow these short disposal instructions:



DISPOSING OF THE PACKAGING
The components of the packaging (i.e. cardboard, plastic, etc.) are solid urban waste and may be disposed of without much trouble, simply by separating them for recycling.
Before proceeding it is always a good idea to check your local legislation on the matter.
DO NOT DISPOSE OF IN NATURE!



PRODUCT DISPOSAL
Our products are made up of various materials. Most of these (aluminium, plastic, iron, electric cables) are solid urban waste. These can be disposed of at local solid waste management dumps or recycling plants.
Other components (i.e. electronic cards, transmitter batteries, etc.) may contain hazardous substances.
These must therefore be handed over the specially authorised disposal firms.
Before proceeding it is always a good idea to check your local legislation on the matter.
DO NOT DISPOSE OF IN NATURE!

12 Compliance statement

Declaration CE - Came Cancelli Automatici S.p.A. declares that this device complies with the essential requirements and other relevant provisions established in Directives 2004/108/EC and 2006/95/EC.

A true copy of the declaration of conformity is available upon request.

p. 11 - Manual code: 319T90 ver. 3 04/2014 © CAME Cancelli Automatici S.p.A. - The data and information in this manual may be changed at any time and without obligation on the part of Came Cancelli Automatici S.p.A. to notify said changes.

IT • Per ogni ulteriore informazione su azienda, prodotti e assistenza nella vostra lingua:

EN • For any further information on company, products and assistance in your language:

FR • Pour toute autre information sur la société, les produits et l'assistance dans votre langue :

DE • Weitere Infos über Unternehmen, Produkte und Kundendienst bei:

ES • Por cualquier información sobre la empresa, los productos y asistencia en su idioma:

NL • Voor meer informatie over het bedrijf, de producten en hulp in uw eigen taal:

PT • Para toda e qualquer informação acerca da empresa, de produtos e assistência técnica, em sua língua:

PL • Wszystkie inne informacje dotyczące firmy, produktów oraz usług i pomocy technicznej w Waszym języku znajdują się na stronie:

RU • Для получения дополнительной информации о компании, продукции и сервисной поддержке на вашем языке:

HU • A vállalatra, termékeire és a műszaki szervizre vonatkozó minden további információért az Ön nyelvén:

HR • Za sve dodatne informacije o poduzeću, proizvodima i tehničkoj podršci:

UK • Для отримання будь-якої іншої інформації про компанію, продукцію та технічну підтримку:



www. came.com

English *- Manual code:* ***319T90*** *ver.* ***3*** *04/2014* *© CAME Cancelli Automatici S.p.A.*
The data and information in this manual may be changed at any time and without obligation on the part of Came Cancelli Automatici S.p.A. to notify said changes.

CAME Cancelli Automatici S.p.a.
Via Martiri Della Libertà, 15
31030 Dosson Di Casier (Tv)
(+39) 0422 4940
(+39) 0422 4941
Assistenza Tecnica/Numero Verde 800 295830

www.metalines.com Polydon Industries Ltd, Polydon Park, Radiance Road, Doncaster, South Yorkshire DN1 2TE | Tel: 01302 327172 | Fax: 01302 380124 sales@metalines.com