CABLING DIAGRAM – RENOVATION INTERCOM WITH CENTRAL UNIT 03-0102

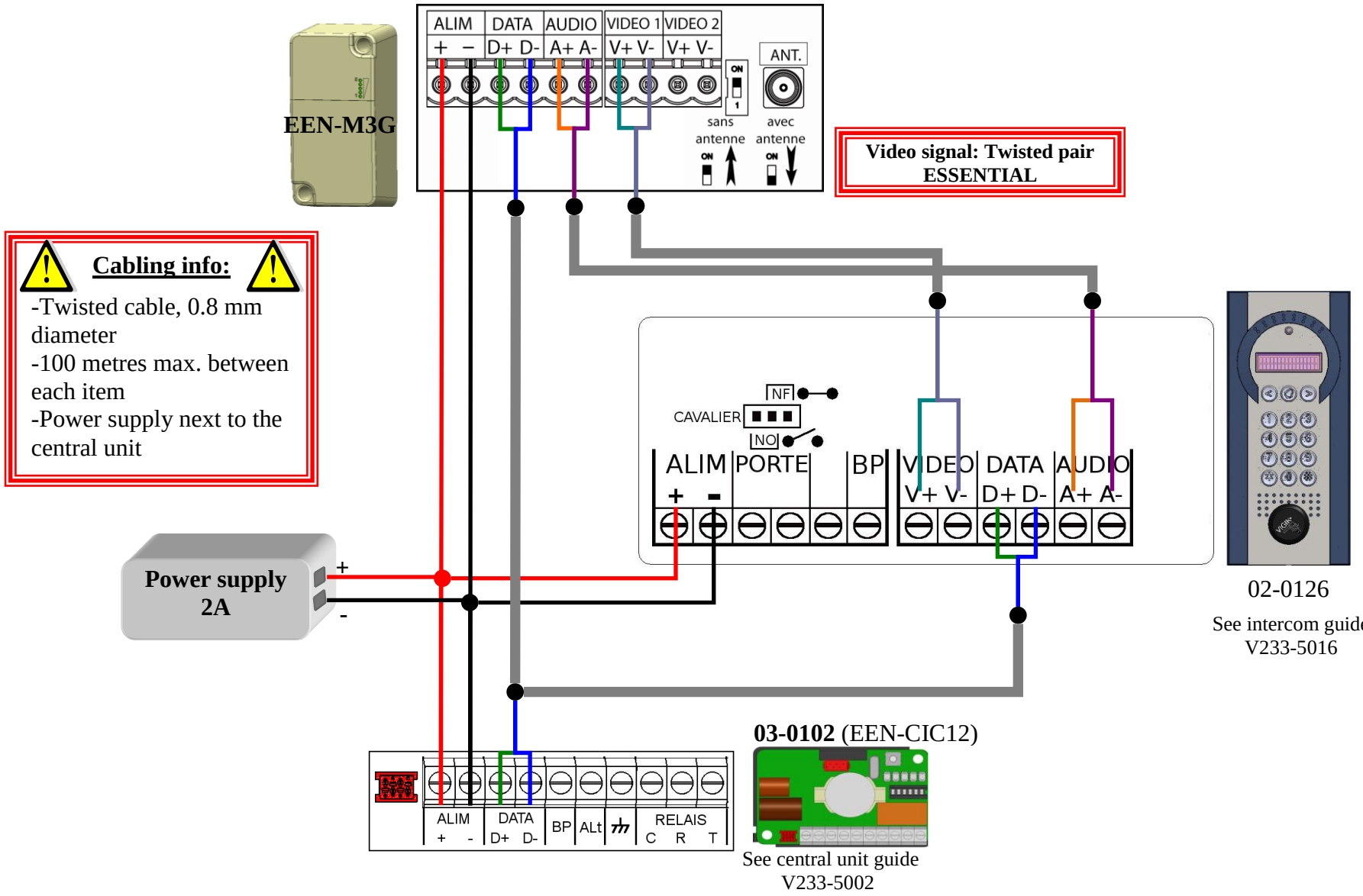

Cabling diagram – Renovation intercom with central unit 03-0102

CABLING FOR THE PUSH BUTTON AND ENTRANCE DOOR

Two possible cabling methods: to the central unit **OR** to the intercom:

MAGNET LOCK

Central unit side

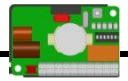

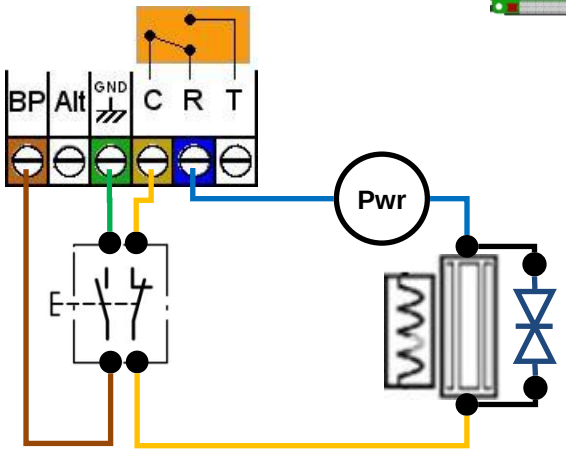

Intercom side

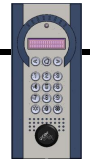

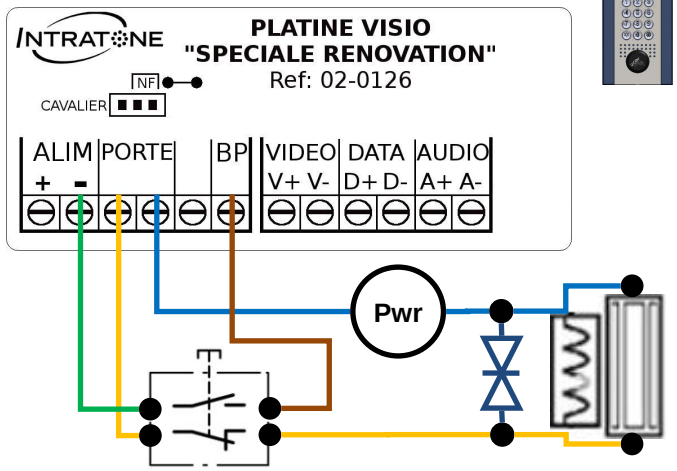

Information

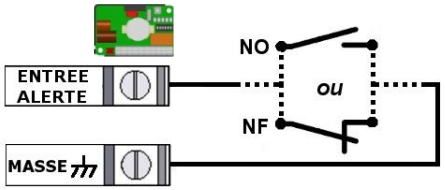

Alert management: a configured email is sent to the website www.intratone.info via a voltage-free contact of NO **or** NF type on this terminal block (Alt).

ELECTRIC LOCK

Central unit side

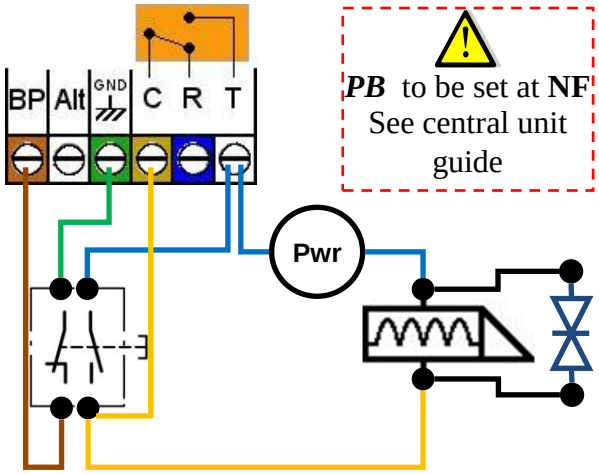

PB to be set at **NF**
See central unit guide

Intercom side

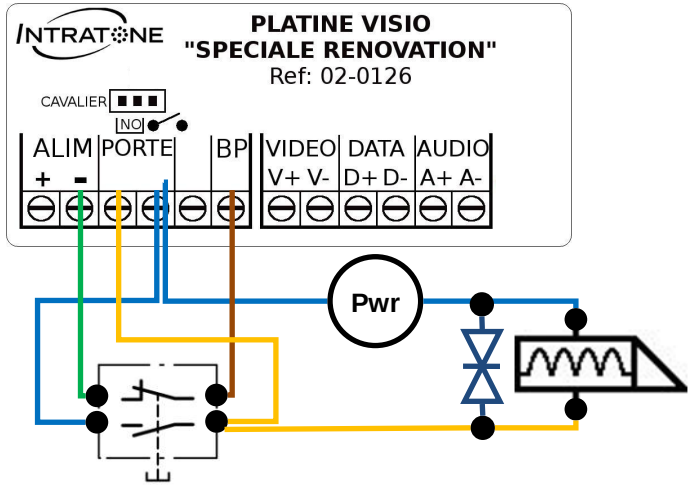

Information

Maximum **allowable** voltage on the relay: 42V AC or 60V DC

- Relay protection varistor supplied and calibrated for **12V**. Cabling **essential**.

Pwr — Electric lock or magnet lock power supply

Jumper position:
NO → An **electric lock**
NF → A **magnet lock**

Cabling diagram – Renovation intercom with central unit 03-0102