INSTALLING AND USING THE "SPECIAL RENOVATION" INTERCOM

GENERAL POINTS

The "special renovation" video intercom (ref. 02-0126) is the size of a keypad, and can easily replace the latter as part of a renovation.

It is equipped with a **removable terminal block** for fast, clean installation.

We have optimised sound quality with a "**full duplex**" system: Anti-feedback and external noise reduction.

It must be connected with a 3G module on the following **"real-time"** central units:

- 2 to 4 doors (ref. **03-0101** HCEN12)
- 1 door (ref. **03-0102** EEN-CIC12)

Product description:

The Video intercom with name scrolling is composed of:

- ✓ A 12-key keypad and backlit / braille LCD screen (ø 16 mm).
- ✓ Two scroll keys and one call key
- ✓ A proximity reader
- ✓ A miniature camera for use when making video calls
- ✓ Built-in speech synthesis: "Call in progress"; "Door open", etc.

The intercom is available in flush-fit only and with 3 finishes:

- *Anthracite / Silver – Stainless steel zamak*
- *Champagne / Silver – Aluminium zamak*
- *Gilt / Gold – Aluminium zamak*

Manage the key safe remotely and in real time via our website: www.intratone.info

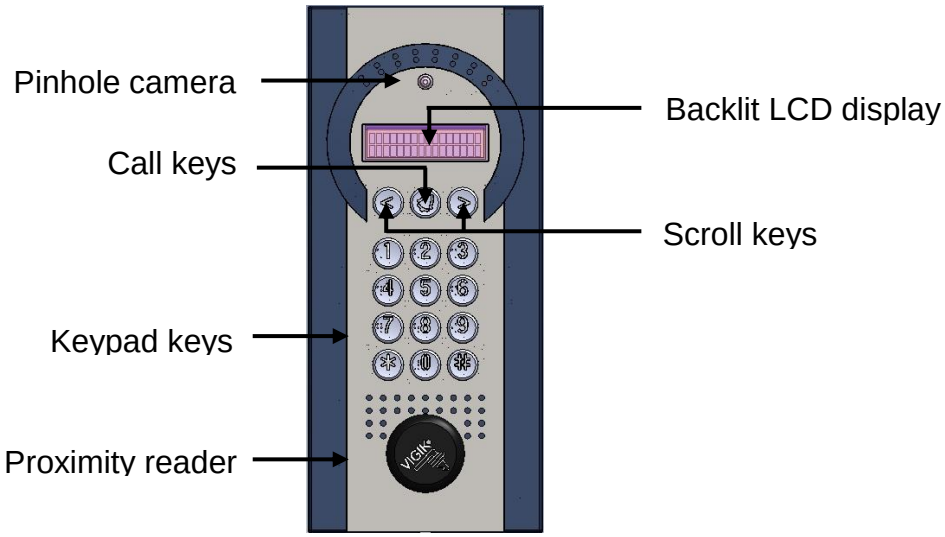

TABLE OF CONTENTS

GENERAL POINTS ----------1

TABLE OF CONTENTS ----------2

DIMENSIONS AND FITTING ----------3

A) DIMENSIONS ---------- 3
B) BUILT-IN WALL BOX DIMENSIONS ---------- 4
C) FITTING ---------- 5

WIRING ----------6

A) GENERAL POINTS ---------- 6
B) CONNECTION OF THE ELECTRIC LOCK / MAGNET LOCK AND THE PUSH BUTTON 6
C) CONNECTING INTRATONE EQUIPMENT ---------- 7

INSTALLATION SCENARIOS ----------8

A) FOR USE WITH AUDIO CALLS ONLY ---------- 8
B) FOR USE WITH VIDEO CALLS ---------- 8
C) CABLING SCENARIO FOR A GATE WITH 2 TYPES OF CENTRAL UNITS ---------- 8
D) CABLING SCENARIO FOR A GATE PLUS A BUILDING ---------- 8

EQUIPMENT CONFIGURATION ----------9

A) GENERAL POINTS ---------- 9
B) CONFIGURATION WITH A RESIDENTIAL CENTRAL UNIT 03-0101 ---------- 9
C) CONFIGURATION WITH AN INTRACODE CENTRAL UNIT 03-0102 ---------- 10

POST-INSTALLATION CHECK ---------- 11

A) ON THE INTERCOM ---------- 11
B) CONNECTION TO THE DOOR ---------- 11
C) CALLS ---------- 11
D) 3G MODULE RECEPTION LEVEL ---------- 11

TROUBLESHOOTING ---------- 12

CERTIFICATE OF CONFORMITY ---------- 13

A) STANDARDS: ---------- 13
B) CERTIFICATES ---------- 14

DIMENSIONS AND FITTING

A) <u>DIMENSIONS</u>

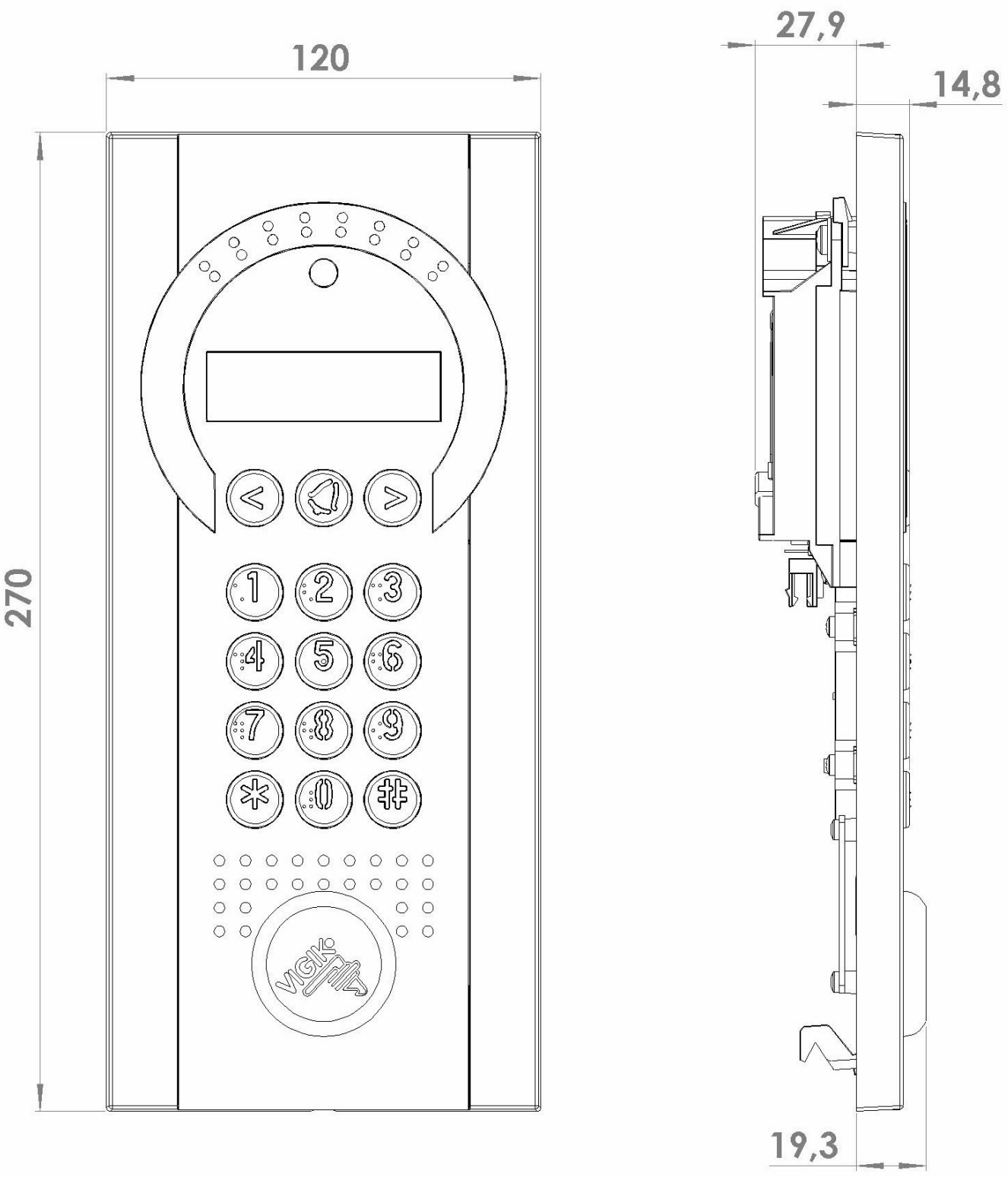

B) BUILT-IN WALL BOX DIMENSIONS

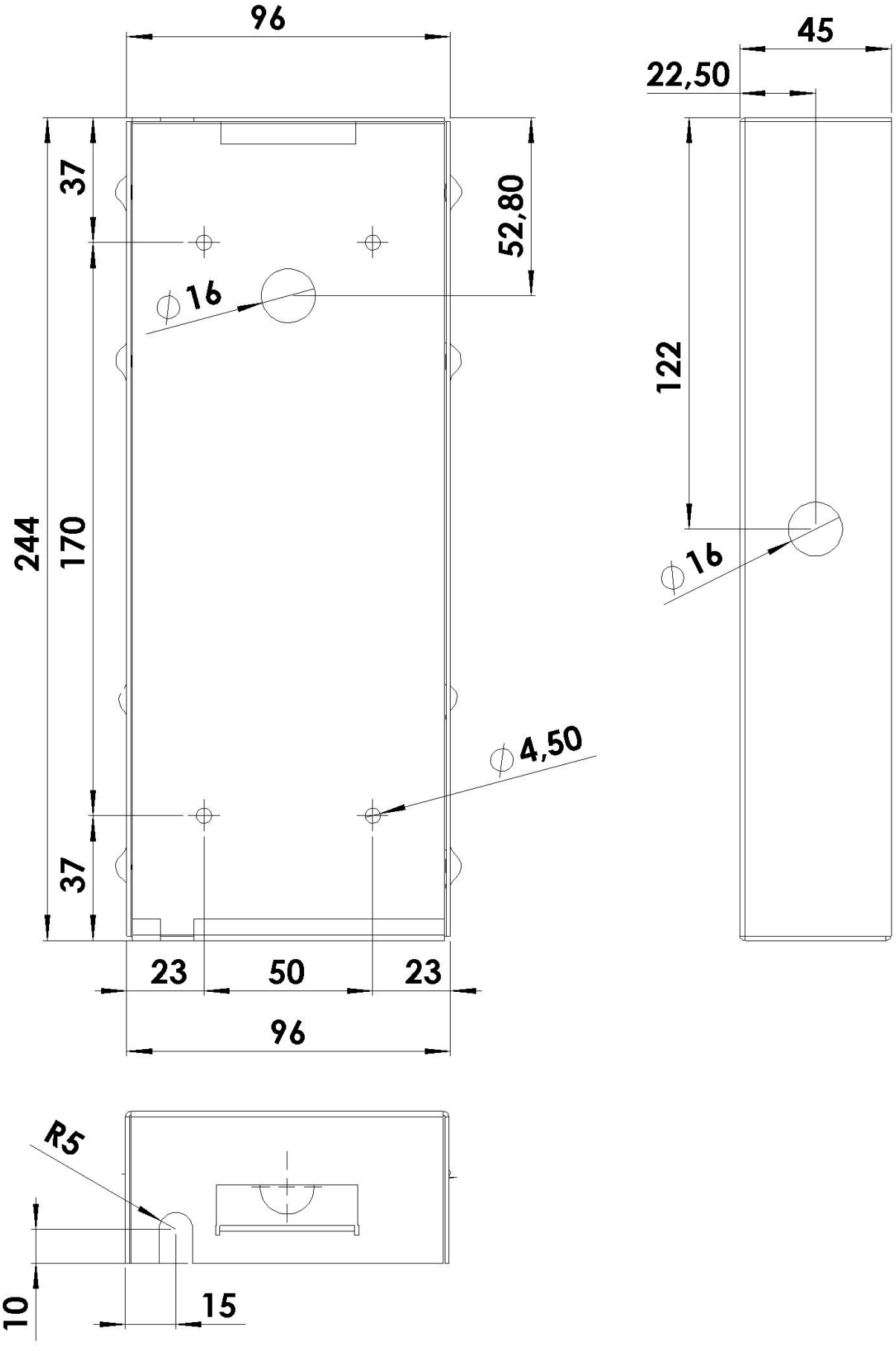

C) FITTING

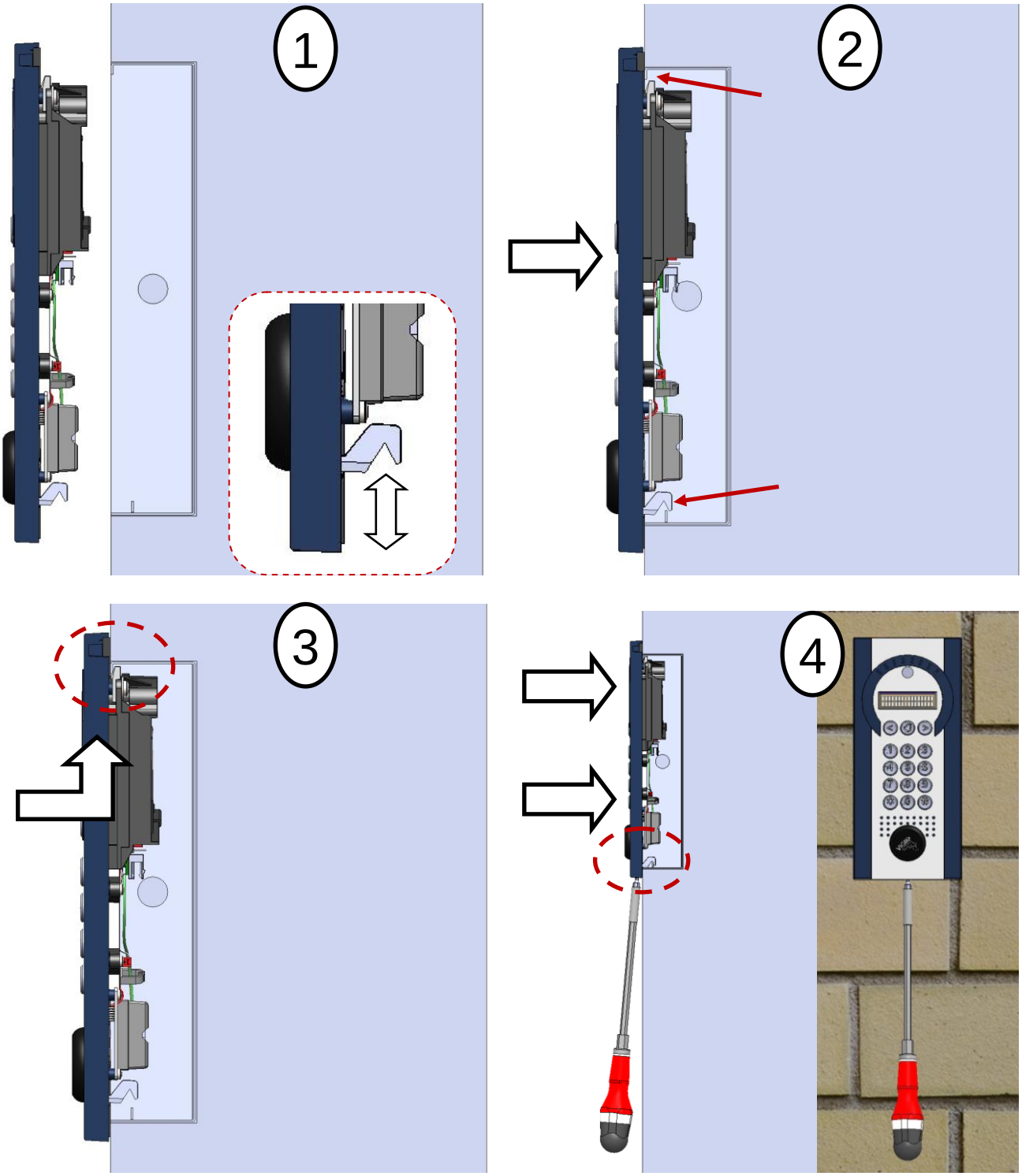

WIRING

A) GENERAL POINTS

- Twisted pairs – Diameter: 0.8 – Max distance 100 metres
- **Video will only work if the intercom is fitted with a 3G module.**
- Maximum **allowable** voltage on the relay of the intercom / central unit: 42V AC or 60V DC
- Relay protection varistor supplied and calibrated for **12V**. Cabling**essential**.

B) CONNECTION OF THE ELECTRIC LOCK / MAGNET LOCK AND THE PUSH BUTTON

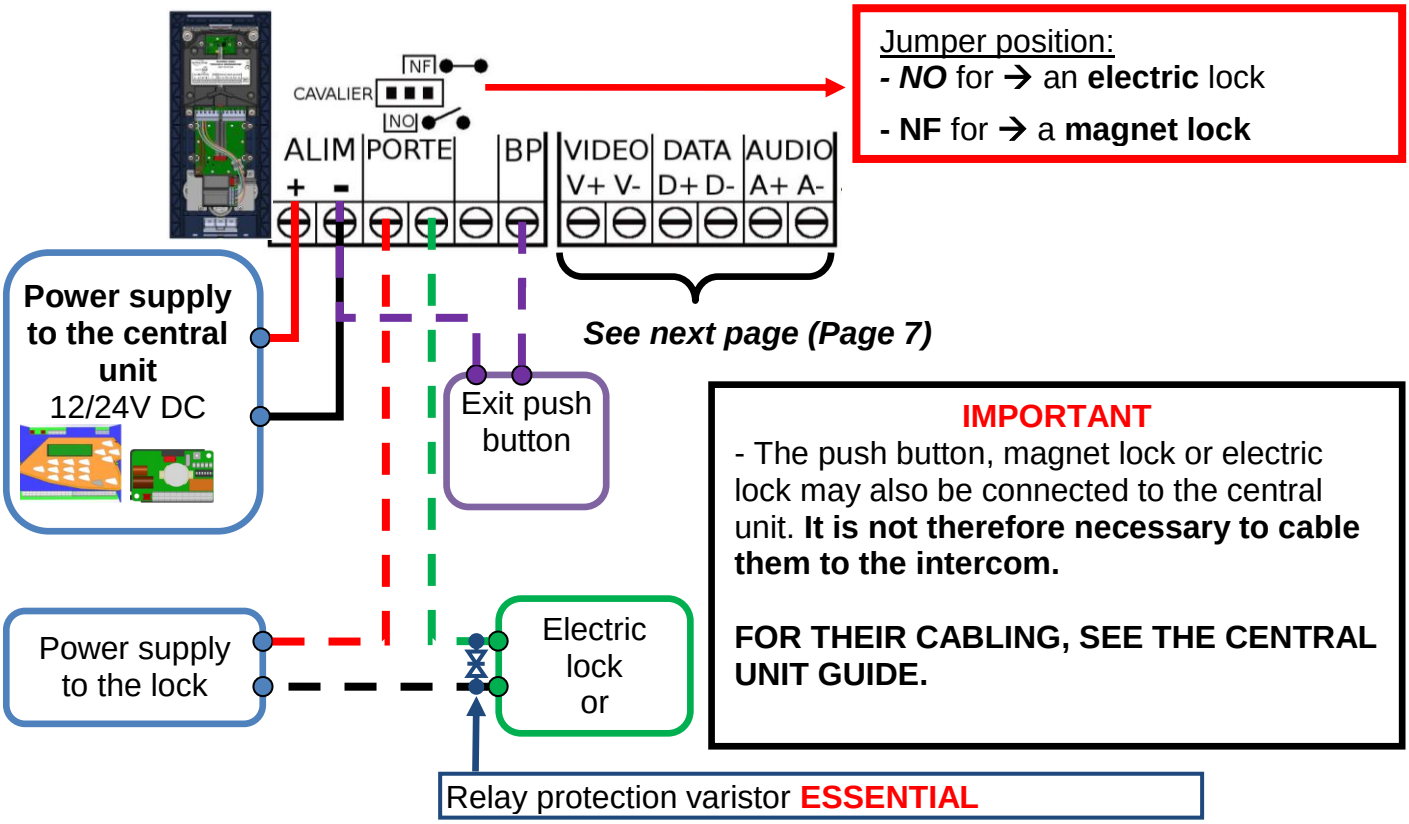

IN THE CASE OF CABLING THE DOOR / PUSH BUTTON TO THE INTERCOM

CABLING ESSENTIAL

C) CONNECTING INTRATONE EQUIPMENT

1-door central unit 03-0102 (HCIC)

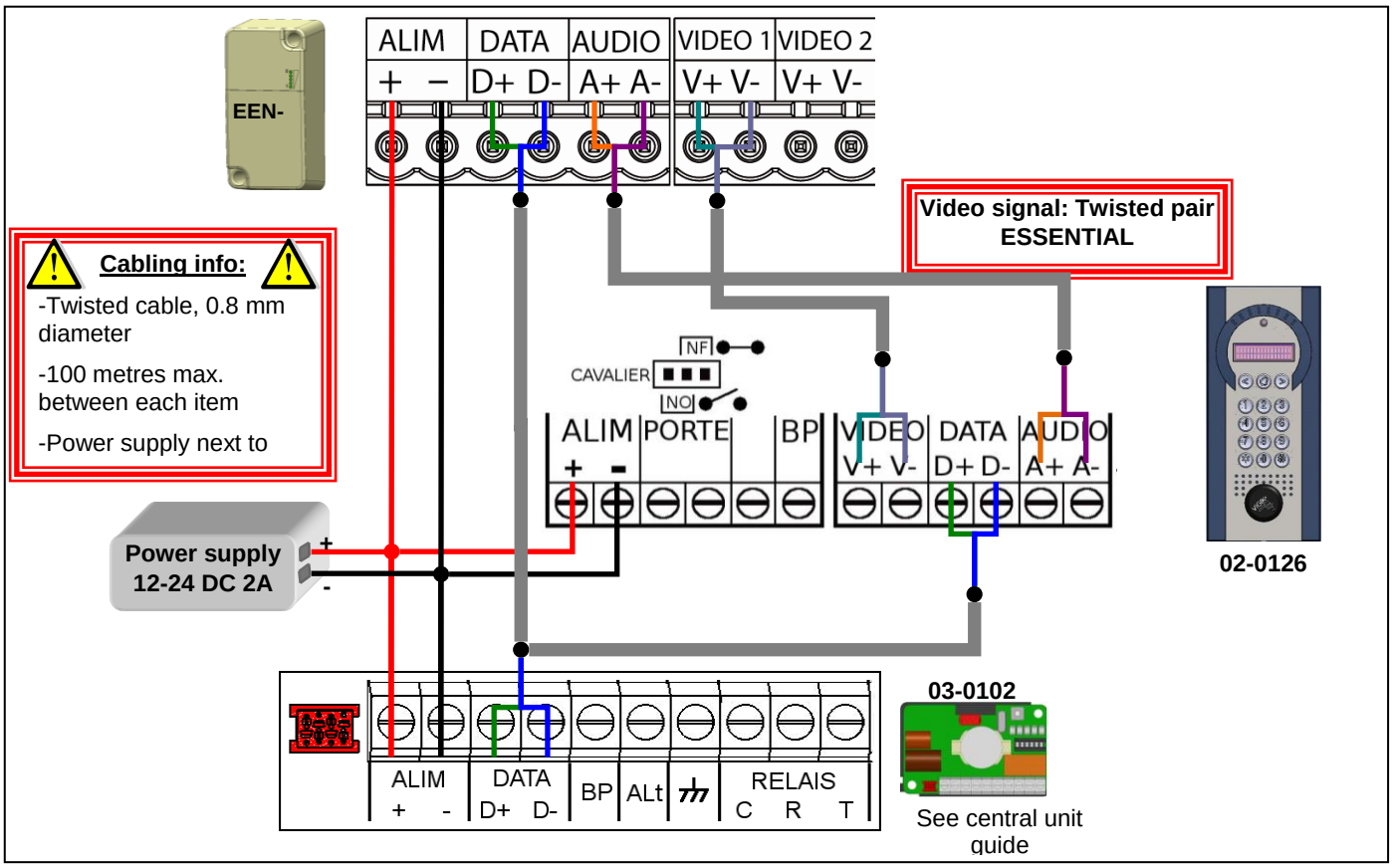

2-4 door central unit 03-0101 (HCEN12)

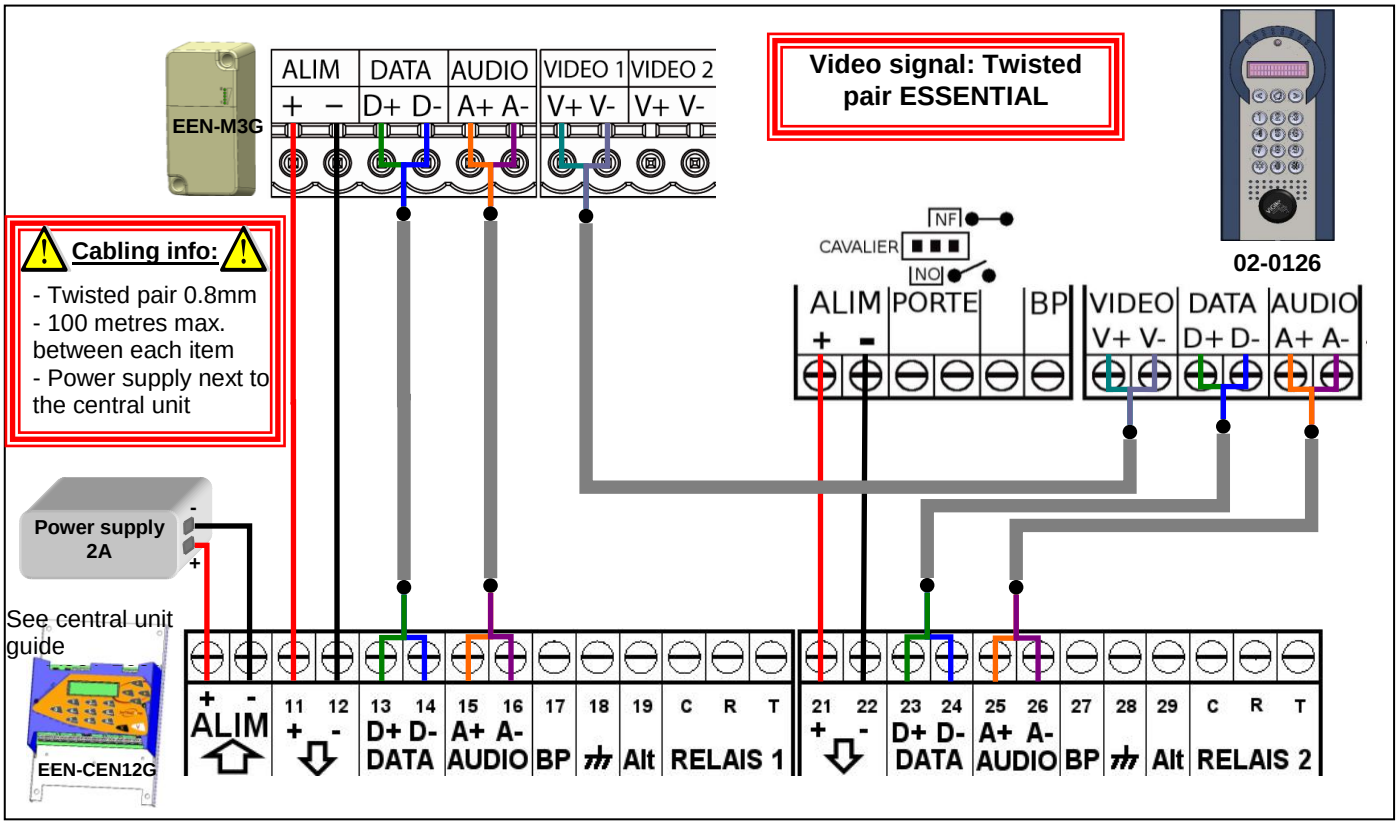

INSTALLATION SCENARIOS

A) FOR USE WITH AUDIO CALLS ONLY

Cable the following terminals to the central unit:

Terminal	*Details*	*Pair no.*
+ / -	Power supply	1
D-	Data	1
A+ / A-	Audio	1

Twisted pair recommended

B) FOR USE WITH VIDEO CALLS

Also cable the following terminals to the V+ / V- (VIDEO 1) terminals on the 3G module:

Terminal	*Details*	*Pair no.*
V-	Video	1

⚠ **Twisted pair ESSENTIAL for Video**

C) CABLING SCENARIO FOR A GATE WITH 2 TYPES OF CENTRAL UNITS

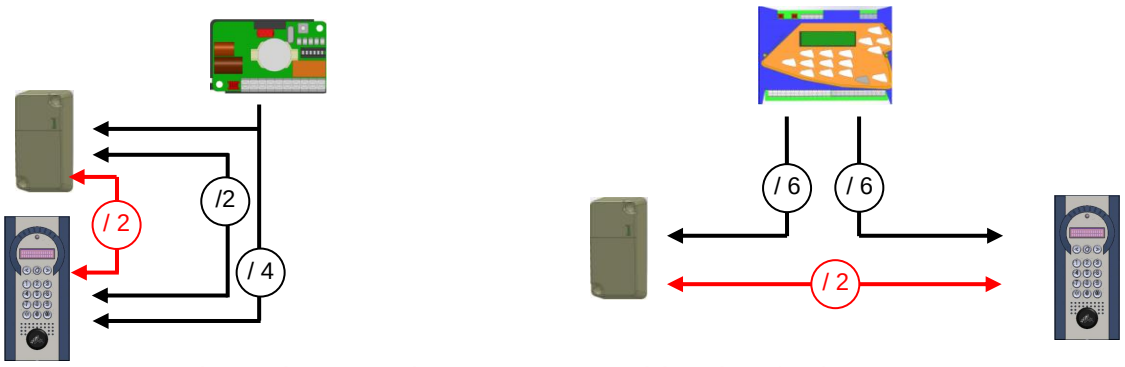

The red connection represents Video (V+ / V-)
The black connection represents +/- , D+/D- and A+/A-

D) CABLING SCENARIO FOR A GATE PLUS A BUILDING

It is essential to use a central unit **03-0101** with, in our example, an extension card.
Scenario:
"Audio and Video" calls from the gate
From the entrance of the building, only "Audio" calls are possible.

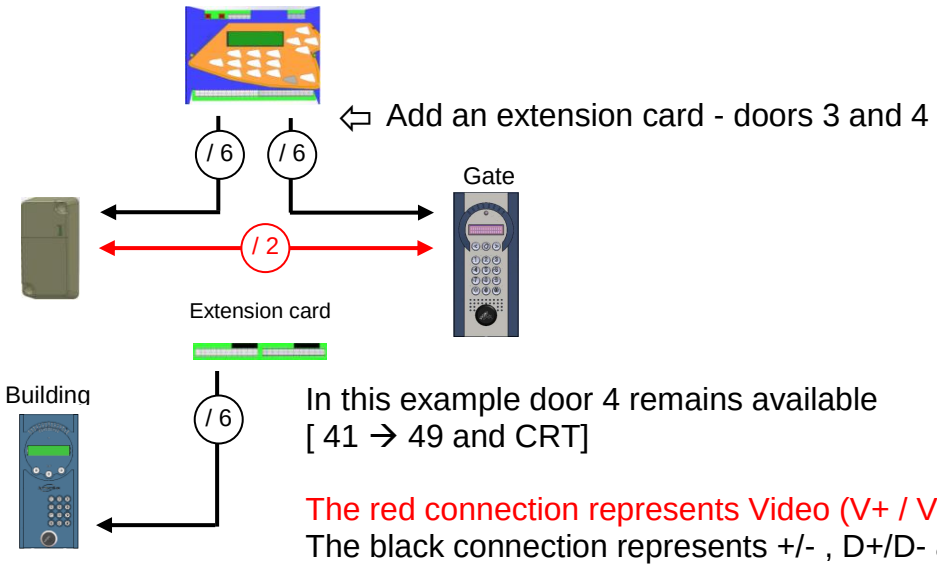

In this example door 4 remains available
[41 → 49 and CRT]

The red connection represents Video (V+ / V-)
The black connection represents +/- , D+/D- and A+/A-

EQUIPMENT CONFIGURATION

A) GENERAL POINTS

INTRATONE intercoms are mainly configured via the website **www.intratone.info**.
Nonetheless, some settings can only be changed on the spot:

- Push button configuration.
- Door opening time configuration.
- Intercom volume.

B) CONFIGURATION WITH A RESIDENTIAL CENTRAL UNIT 03-0101

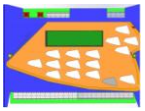

(See central unit guide V233-5001-XX)

For push button and time-delayed opening see the central unit ***"Door settings"*** menu.

For the volume level, two choices are available to you in the "Intercom volume" menu:

- ***"Direct volume input":***

Enter a value between 1 and 4 corresponding to the volume level.

- ***"Intercom adjustment":***

This menu triggers a 15-minute counter. Throughout this time you can go to the intercoms connected to this central unit to adjust the volume level.

Step 1:	**Step 2:**	Step 3:
Enter the keypad code: "**12345678**"	The intercom automatically triggers **"volume level adjustment"** which runs in a loop.	**Confirm** the selected level by pressing the **call button** on the intercom
		

This procedure is valid during the 15 minutes of the counter. To exit this procedure, wait until the end of the counter or quit the "Intercom adjustment" menu.

C) CONFIGURATION WITH AN INTRACODE CENTRAL UNIT 03-0102

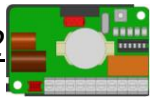

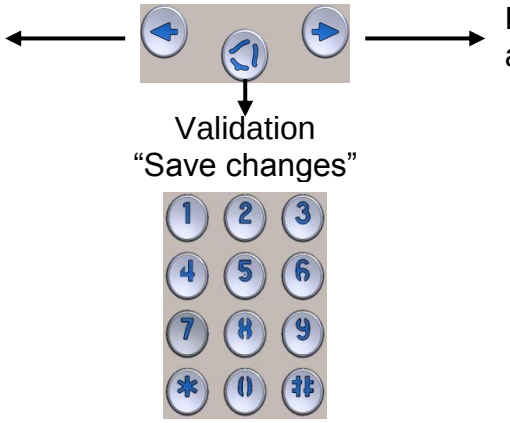

- **How to enter settings mode**
  - Check that the welcome message is scrolling on the LCD screen
  - Press the 🔔 key until the **"Enter password"** menu appears.
  - Enter the serial no. of the central unit (7xxxxxx3).
  - Confirm with the 🔔 **button.** ***"You are in menu settings mode"***
- **Exit settings mode:**
  - Press the ↩ arrow several times until you return to the scrolling message.

Choice of settings mode menus:

Clock adjustment	**Date: 28/01/13** **Day: Monday**	Numerical keys for date input ➲ key for day selection
	Time: 09:15 **Type: winter**	Numerical keys for time input ➲ key for summer/winter season selection
	Accept remote time: YES	➲key for YES or NO selection
Door settings	**Door settings** **PB:NO** **Time delay: 05s**	➲ key to select: NO or Numerical keys for time delay input
	🔔 or ↩	↩ key to Quit 🔔 key to confirm
Intercom volume	**Direct volume input**	Enables direct input via the keypad of the volume of the connected intercom
INTERNET update request	**Request an update?**	🔔 key to confirm
Check the installation	**Test number:**	Enables direct input via the keypad of the telephone number to call for test purposes.
	🔔	Start test procedure

Warning: the door settings menu only appears when switches 4 / 5 / 6 of central unit 03-0102 are positioned at OFF.

POST-INSTALLATION CHECK

Before quitting the installation, the following points must be checked:

A) ON THE INTERCOM

- Display correctly shows the welcome message
- Check that the keypad keys (0,1, 2 →9, * and #) are working.
  Procedure:
  - Press #. the display shows “Call number”
  - The numerical keys should be correctly displayed
  - End with the * key. The display should return to the welcome message.
- Check that the keypad keys are backlit.

B) CONNECTION TO THE DOOR

- Check door opening with the push button
- Check door opening with a badge

(See Test procedure in the central unit guide)

C) CALLS

- Check visitor to resident sound quality:
  - Audio call
  - Video call
- Check that during the call the resident can open their door by pressing the * key on their telephone

(See Test procedure in the central unit guide)

D) 3G MODULE RECEPTION LEVEL

With your intercom, it is possible to see the reception level for this block by simultaneously pressing the 2 scrolling arrows ➲ 🔔 ➲ on the display.

You will either have:
“RES 3G Niv **17** **3**” or “RES GSM Niv **17** **3**”

- RES: indicates which network has been found by the block (3G or GSM)
- Niv : indicates the level out of 30 (here **17** / 30) and the corresponding ratio out of 5 (here **3** / 5)

Press one of the arrows to quit this menu.

TROUBLESHOOTING

What is the fault?	***What has caused the fault?***	***How to fix the fault***
Message on display: "**Communication fault**"	Incorrect cabling on D+ and/or D- terminal blocks	- Check cabling between the 3G module, the intercom and the central unit: D+ and or-. - The display should show the welcome message.
Keys and display not **backlit**	- Incorrect cabling on + and/or – terminal blocks - Equipment fault	- Check cabling between the + and/or - terminal blocks - Contact our technical services
Keys are **backlit** but display is not (or vice versa)	Contact our technical services	
The screen **LCD** does not light up	Incorrect cabling on + and/or – terminal blocks	Check cabling between the central unit and the intercom: + / -
When a badge is presented, the LED of the reader lights up green but the **door does not open**.	- Central unit relays not working. - Cable to the door	- Check if the relay is stuck - Check cabling between the central unit and the door
If the **intercom** says "Call in progress" but the resident cannot hear the visitor	Incorrect cabling on the A+ and/or A- terminal blocks	Check A+ / A- cabling
The **intercom** says "Call failed" with no call tone	Telephone network unavailable	Check cabling to the GSM unit and LED level
The resident **cannot see** the visitor in their phone	- Incorrect V+ / V- cabling - Intercom is not a Video intercom - The unit is not a 3G module - The telephone is not a Video telephone	- Check V+ / V- cabling

☎ Contact our technical services (02 51 65 51 84) ☎

CERTIFICATE OF CONFORMITY

A) STANDARDS:

EU standards:
The intercom is compliant with **R&TTE Directive 1999/5/EC**: electrical safety standard applied **EN 60950(2001)**, EMC standard applied **EN 301 489-3(2002)**, radio standard applied **EN 300 330-2(2001)**
The intercom is compliant with telephone network standards **TS-103 021** and **TR-103 000**.

Cabling:
The cables connected to the central unit must not be close to other power sources (mains power supply, for example).

Operating guarantees:
The intercom is guaranteed within a temperature range of **-20°C to +70°C** and a level of relative humidity not exceeding 70%.

End-of-life recycling of the product:



The intercom and its accessories must not be discarded with unsorted municipal waste, but must be disposed of via the WEEE (Waste Electrical and Electronic Equipment) collection and recycling system

B) CERTIFICATES

Téléphone : 33 (0)2 51 65 05 79
Télécopie : 33 (0)2 51 63 05 96
E-mail : info@cogelec.fr

DECLARATION DE CONFORMITE D'UN EQUIPEMENT RADIO-ELECTRIQUE
(DIRECTIVE R&TTE 1999/5/CE)

FABRICANT

Nom :	**COGELEC SAS**
Adresse :	**1, rue de l'industrie**
	85290 Mortagne sur Sévre
	FRANCE

Téléphone : 33 (0)2 51 65 05 79 Télécopie : 33 (0)2 51 63 05 96 E-mail : info@cogelec.fr

IDENTIFICATION DE L'EQUIPEMENT

Marque :	INTRATONE
Désignation commerciale :	**Platine visio « spéciale rénovation » pose en encastrement.**
Référence commerciale :	**02-0126 (Finition Anthracite&Argent)**
	02-0135 (Finition Champagne&Argent)
	02-0138 (Finition Doré&Or)
Type :	**Platine d'interphonie connectable sur un réseau GSM/UMTS.**
Application prévue :	**Contrôle d'accès pour les immeubles d'habitation.**

Je soussigné, **Roger LECLERC président** de la société **COGELEC SAS** :
Déclare sous son entière responsabilité que le produit décrit ci-dessus est en conformité avec les exigences essentielles applicables de la directive 1999/5/CE :

- **Article 3.1a** (protection de la santé et sécurité des utilisateurs) :
  Norme de sécurité électrique appliquée : **EN 60950-1 :2006**
  Normes EMF appliquées : **EN 62311 :2008** et **EN 50371 :2002**
- **Article 3.1b** (exigences de protection en ce qui concerne la compatibilité électromagnétique) :
  Normes CEM appliquées : **EN 301 489-7 V1.2.1 (02)** et **EN 301 489-3 V1.4.1**
- **Article 3.2** (utilisation efficace du spectre radioélectrique afin d'éviter les interférences dommageables) :
  Normes radio appliquées : **EN 301 511 V.9.0.2 (2003-03)** et **EN 302 291-2 V1.1.1**

A cet effet, déclare que toutes les séries d'essais radio ont été effectuées.

Date : **28 mai 2014**

Signature :

1, rue de l'industrie
85290 Mortagne sur Sévre
FRANCE

SAS au capital de : 437 490€ Code N.A.F : 2630Z N° de siret : 433 034 782 000 22

CREER POUR INNOVER

Q-IMP-0099-E

Téléphone : 33 (0)2 51 65 05 79
Télécopie : 33 (0)2 51 63 05 96
E-mail : info@cogelec.fr

DECLARATION DE CONFORMITE D'UN EQUIPEMENT RADIO-ELECTRIQUE
(DIRECTIVE R&TTE 1999/5/CE)

FABRICANT

Nom : COGELEC SAS

Adresse : 1, rue de l'industrie
85290 Mortagne sur Sévre
FRANCE

Téléphone : 33 (0)2 51 65 05 79 Télécopie : 33 (0)2 51 63 05 96 E-mail : info@cogelec.fr

IDENTIFICATION DE L'EQUIPEMENT

Marque : INTRATONE

Désignation commerciale : Kit platine visio « spéciale rénovation » avec centrale de gestion VIGIK.

Références commerciales :
02-0127 (100 noms Anthracite&Argent avec centrale 1 porte)
02-0128 (1000 noms Anthracite&Argent avec centrale 2 portes)
02-0136 (100 noms Champagne&Argent avec centrale 1 porte)
02-0137 (1000 noms Champagne&Argent avec centrale 2 portes)
02-0139 (100 noms Doré&Or avec centrale 1 porte)
02-0140 (1000 noms Doré&Or avec centrale 1 porte)

Type : Kit Platine d'interphonie avec centrale de contrôle d'accès.

Application prévue : Contrôle d'accès pour les immeubles d'habitation.

Je soussigné, **Roger LECLERC président** de la société **COGELEC SAS** :
Déclare sous son entière responsabilité que le produit décrit ci-dessus est en conformité avec les exigences essentielles applicables de la directive 1999/5/CE :

- **Article 3.1a** (protection de la santé et sécurité des utilisateurs) :
  Norme de sécurité électrique appliquée : **EN 60950-1 :2006**
  Normes EMF appliquées : **EN 62311 :2008** et **EN 50371 :2002**
- **Article 3.1b** (exigences de protection en ce qui concerne la compatibilité électromagnétique) :
  Normes CEM appliquées : **EN 301 489-7 V1.2.1 (02)** et **EN 301 489-3 V1.4.1**
- **Article 3.2** (utilisation efficace du spectre radioélectrique afin d'éviter les interférences dommageables) :
  Normes radio appliquées : **EN 301 511 V.9.0.2 (2003-03)** et **EN 302 291-2 V1.1.1**

A cet effet, déclare que toutes les séries d'essais radio ont été effectuées.

Date : 28 mai 2014

Signature :

1, rue de l'industrie
85290 Mortagne sur Sévre
FRANCE

SAS au capital de : 437 4906 Code N.A.F : 2630Z N° de siret : 433 034 782 000 22

Q-IMP-0099-E