8 027908 509048 >

AC Ultra

D812865 00100_04 23-12-16

UNIVERSAL CONTROL UNIT FOR ONE OR TWO MOTORS

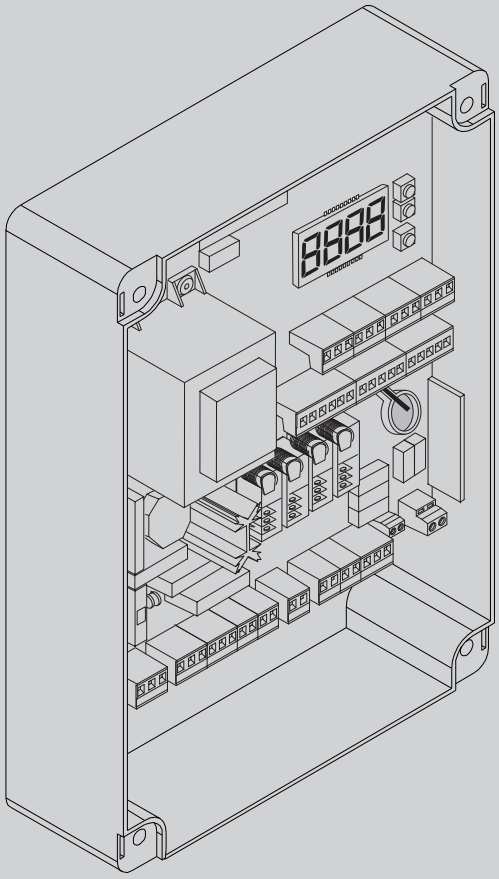

INSTALLATION MANUAL

RIGEL 6

BFT

U-LINK

AZIENDA CON SISTEMA DI GESTIONE INTEGRATO CERTIFICATO DA DNV = UNI EN ISO 9001:2008 = UNI EN ISO 14001:2004

Attenzione! Leggere attentamente le "Avvertenze" all'interno! **Caution!** Read "Warnings" inside carefully! **Attention!** Veuillez lire attentivement les Avertissements qui se trouvent à l'intérieur! **Achtung!** Bitte lesen Sie aufmerksam die „Hinweise" im Inneren! **¡Atención¡** Leer atentamente las "Advertencias" en el interior! **Let op!** Lees de "Waarschuwingen" aan de binnenkant zorgvuldig!

USER WARNINGS (GB)

WARNING! Important safety instructions. Carefully read and comply with the Warnings and Instructions that come with the product as improper use can cause injury to people and animals and damage to property. Keep the instructions for future reference and hand them on to any new users.
This product is meant to be used only for the purpose for which it was explicitly installed.

- Do not allow children to play or stand within range of the automated system.
- The unit can be used by children over 8 years old and by people with reduced physical, sensory or mental capabilities or with no experience or necessary knowledge on condition they are supervised or trained about the safe use of the equipment and understand the risks involved. Children must not play with the unit. Cleaning and maintenance must not be performed by unsupervised children.
- Children must be supervised to ensure they do not play with the device. Do not allow children to play with the fixed controls. Keep remote controls out of reach of children.
- Do not work near hinges or moving mechanical parts.
- Do not hinder the leaf's movement and do not attempt to open the door manually unless the actuator has been released with the relevant release knob.
- Keep out of range of the motorized door or gate while they are moving.
- Keep remote controls or other control devices out of reach of children in order to avoid the automated system being operated inadvertently.
- The manual release's activation could result in uncontrolled door movements if there are mechanical faults or loss of balance.
- When using roller shutter openers: keep an eye on the roller shutter while it is moving and keep people away until it has closed completely. Exercise care when activating the release, if such a device is fitted, as an open shutter could drop quickly in the event of wear or breakage.
- The breakage or wear of any mechanical parts of the door (operated part), such as cables, springs, supports, hinges, guides…, may generate a hazard. Have the system checked by qualified, expert personnel (professional installer) at regular intervals according to the instructions issued by the installer or manufacturer of the door.
- When cleaning the outside, always cut off mains power.
- Keep the photocells' optics and illuminating indicator devices clean. Check that no branches or shrubs interfere with the safety devices.
- Do not use the automated system if it is in need of repair. In the event the automated system breaks down or malfunctions, cut off mains power to the system; do not attempt to repair or perform any other work to rectify the fault yourself and instead call in qualified, expert personnel (professional installer) to perform the necessary repairs or maintenance. To allow access, activate the emergency release (where fitted).

Any other use constitutes improper use and, consequently, is hazardous. The manufacturer cannot be held liable for any damage as a result of improper, incorrect or unreasonable use.

GENERAL SAFETY

Thank you for choosing this product. The Firm is confident that its performance will meet your operating needs.
This product meets recognized technical standards and complies with safety provisions when installed correctly by qualified, expert personnel (professional installer).
If installed and used correctly, the automated system will meet operating safety standards. Nonetheless, it is advisable to observe certain rules of behaviour so that accidental problems can be avoided:
- Keep adults, children and property out of range of the automated system, especially while it is moving.

- If any part of the automated system requires direct work of any kind that is not contemplated herein, employ the services of qualified, expert personnel (professional installer).
- At least once a year, have the automated system, and especially all safety devices, checked by qualified, expert personnel (professional installer) to make sure that it is undamaged and working properly.
- A record must be made of any installation, maintenance and repair work and the relevant documentation kept and made available to the user on request.
- Failure to comply with the above may result in hazardous situations.

SCRAPPING



Materials must be disposed of in accordance with the regulations in force. Do not throw away your discarded equipment or used bat-teries with household waste. You are respon-sible for taking all your waste electrical and electronic equipment to a suitable recycling centre.

Anything that is not explicitly provided for in the user guide is not allowed. The operator's proper operation can only be guaranteed if the instructions given herein are complied with. The Firm shall not be answerable for damage caused by failure to comply with the instructions featured herein.
While we will not alter the product's essential features, the Firm reserves the right, at any time, to make those changes deemed opportune to improve the product from a technical, design or commercial point of view, and will not be required to update this publication accordingly.

QUICK INSTALLATION

D812865 00100_04

TUBE ARRANGEMENT

A

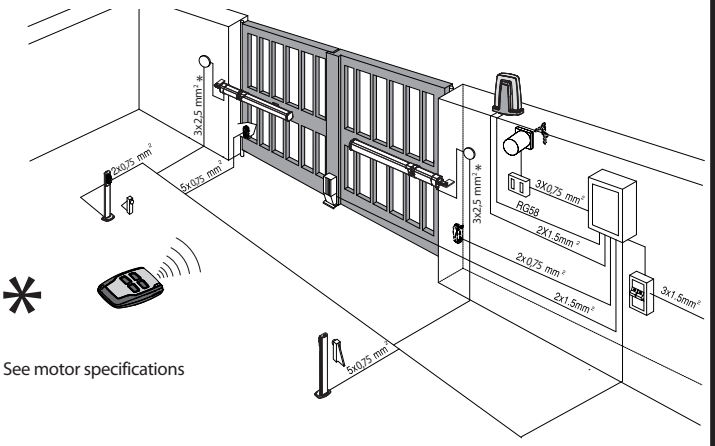

* See motor specifications

B

EBP solenoid lock connection 230V. AUX configuration = Flashing

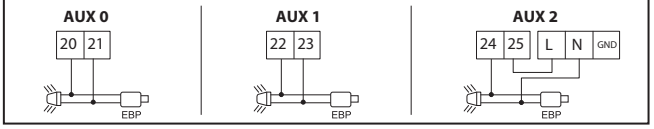

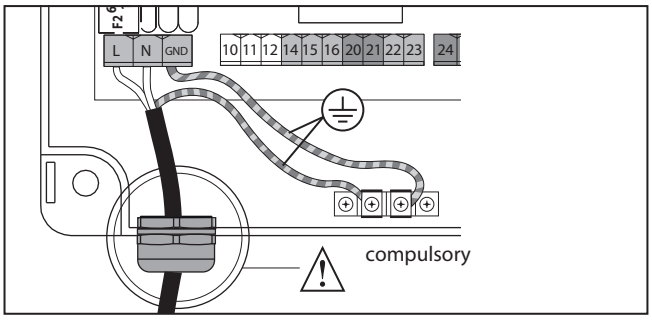

1

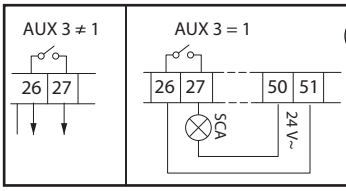

C

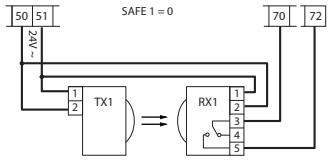

Connection of 1 couple of untested photocells, for tested photocells see the following pages.

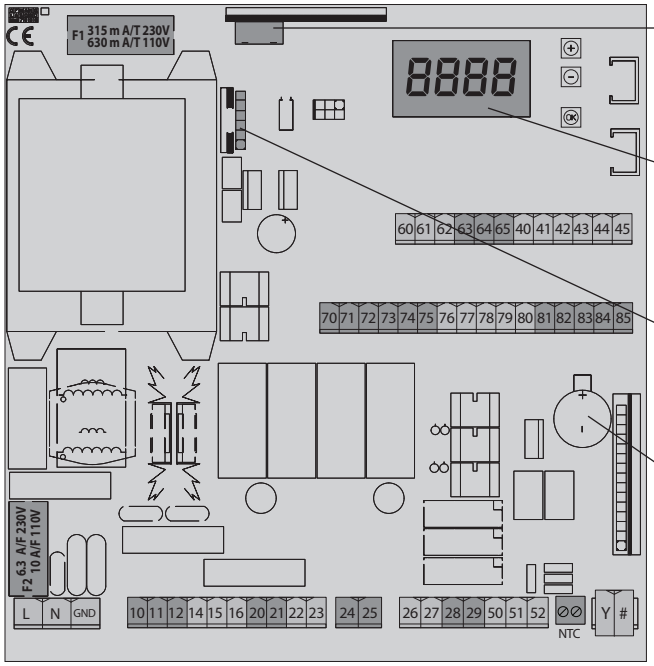

Optional board connector

Display + programming keys

Palmtop programmer connector

Lithium battery 3V CR 1220

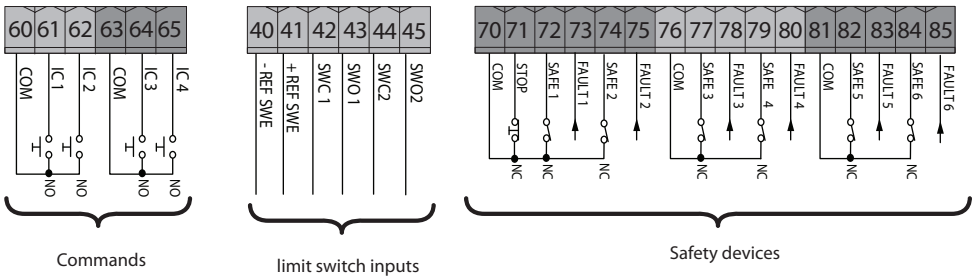

* Other voltages available on request

** Not supplied

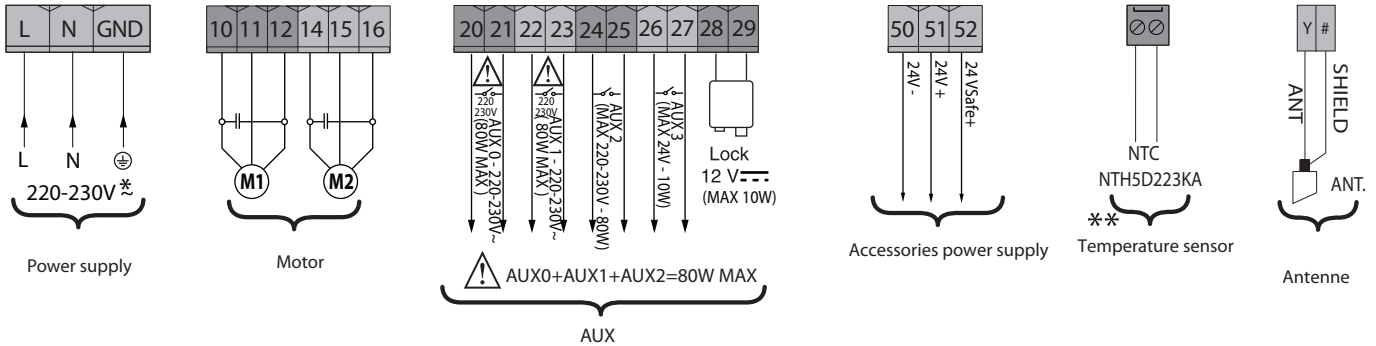

SIMPLIFIED MENU

***** Password entry.**
Request with Protection Level logic set to 1, 2, 3, 4

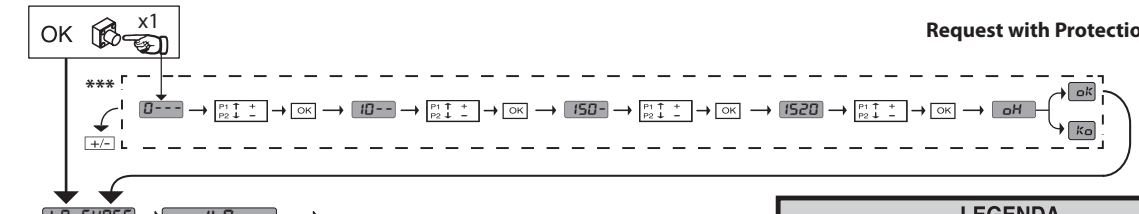

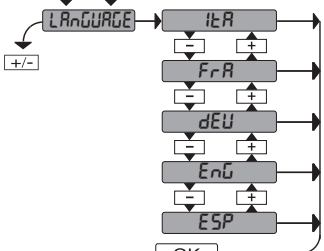

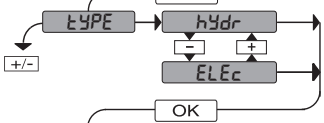

hYdr: hydraulic operator

ELEc: electromechanical operator

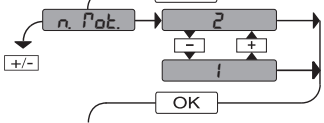

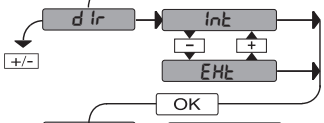

Int: inward opening

EHt: outward opening

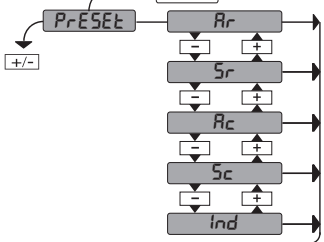

Ar: automatic operation, residential

Sr: semiautomatic operation, residential

Ac: automatic operation, commercial

Sc: semiautomatic operation, commercial

Ind: dead man operation

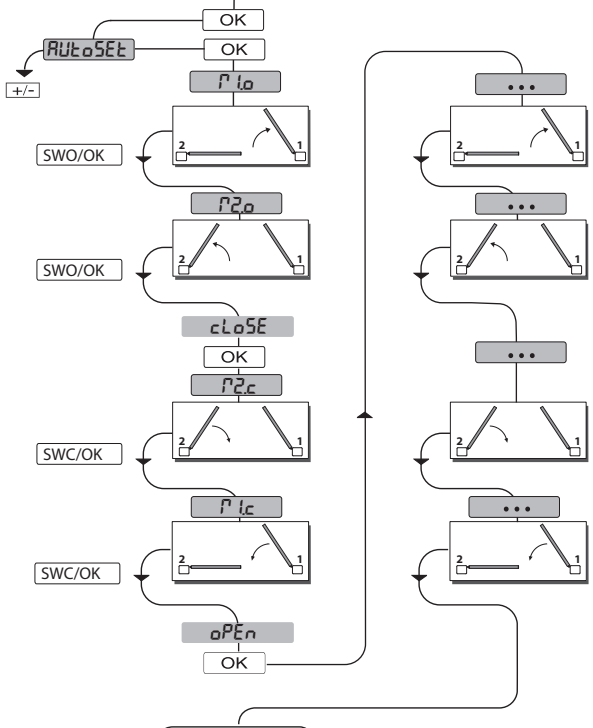

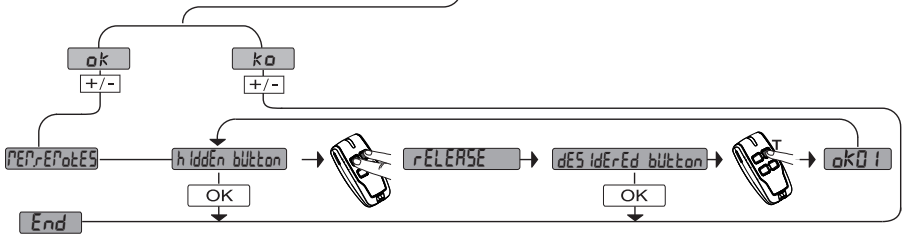

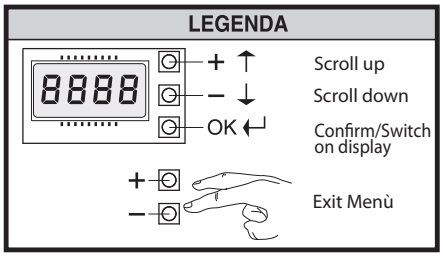

PRESET		DEFAULT	Ar	Sr	Ac	Sc	Ind
PARAMETER							
Operation time motor 1		60.0	20.0	20.0	20.0	20.0	20.0
Operation time motor 2		60.0	20.0	20.0	20.0	20.0	20.0
Time lag opening		3	2	2	2	2	2
Time lag closing		3	2	2	2	2	2
Motor 1 slow-down time	hydraulic	0	0	0	0	0	0
	electromechanical		3	3	3	3	3
Motor 2 slow-down time	hydraulic	0	0	0	0	0	0
	electromechanical		3	3	3	3	3
TCA		40	20	40	30	40	40
Opening force	hydraulic	50	99	99	99	99	99
	electromechanical		50	50	50	50	50
Closing force	hydraulic	50	99	99	99	99	99
	electromechanical		50	50	50	50	50
Slow-down force	hydraulic	50	99	99	99	99	99
	electromechanical		50	50	50	50	50
LOGIC		**DEFAULT**	Ar	Sr	Ac	Sc	Ind
TCA		0	1	0	1	0	0
Step-by-step movement		0	1	0	1	0	0
Pre alarm		0	0	0	1	1	0
Hold-to-run		0	0	0	0	0	1
Impulse lock on opening		0	0	0	1	1	0
Lock hold	hydraulic	0	1	1	1	1	1
	electromechanical		0	0	0	0	0
SAFE 1		0	4	4	4	4	0
Protection level		0	0	0	0	0	2

AUTOSET FOR MOTORS WITH LIMIT SWITCHES

D1

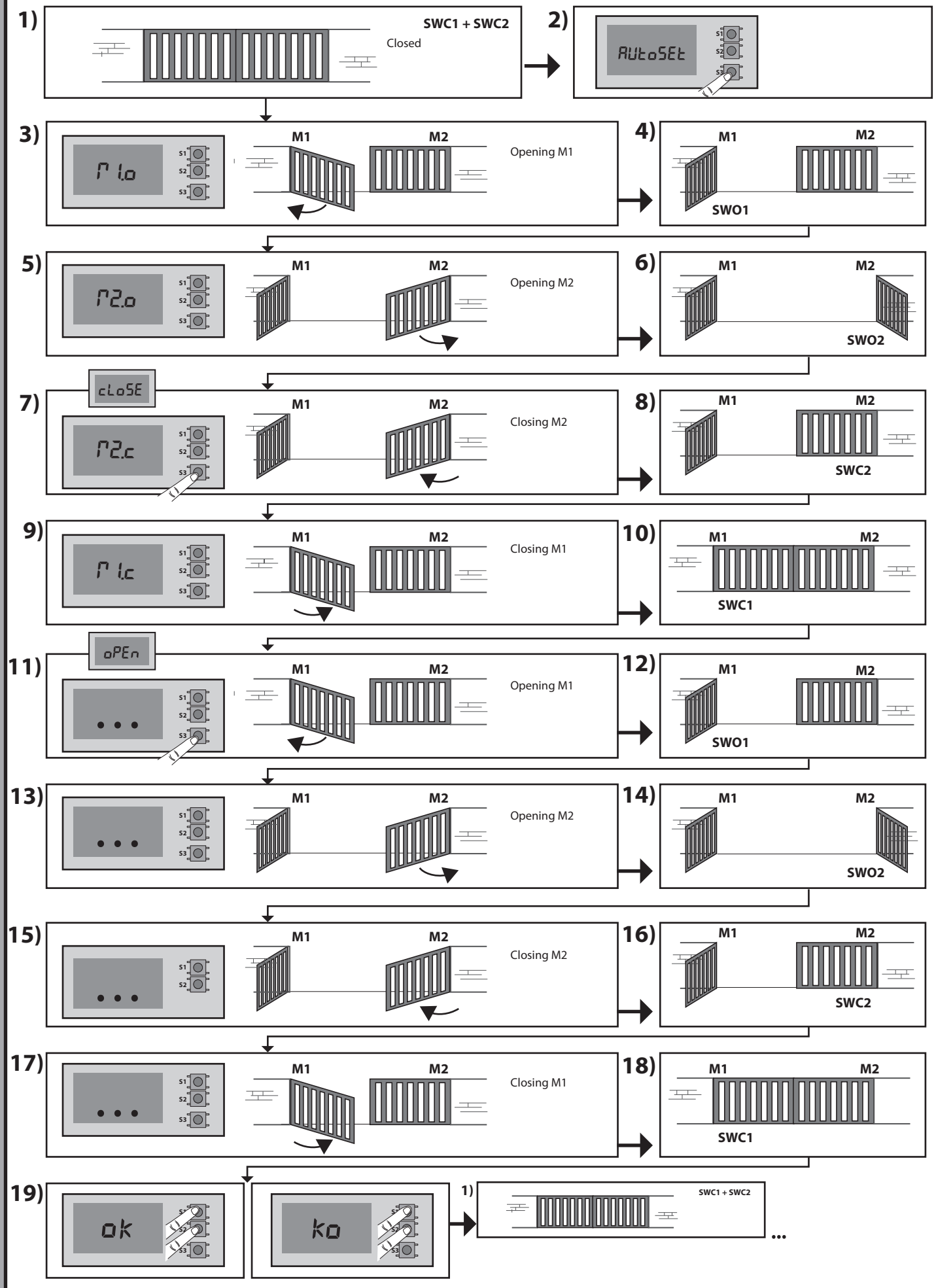

D8128650 0100_04

AUTOSET FOR MOTORS WITH NO LIMIT SWITCHES

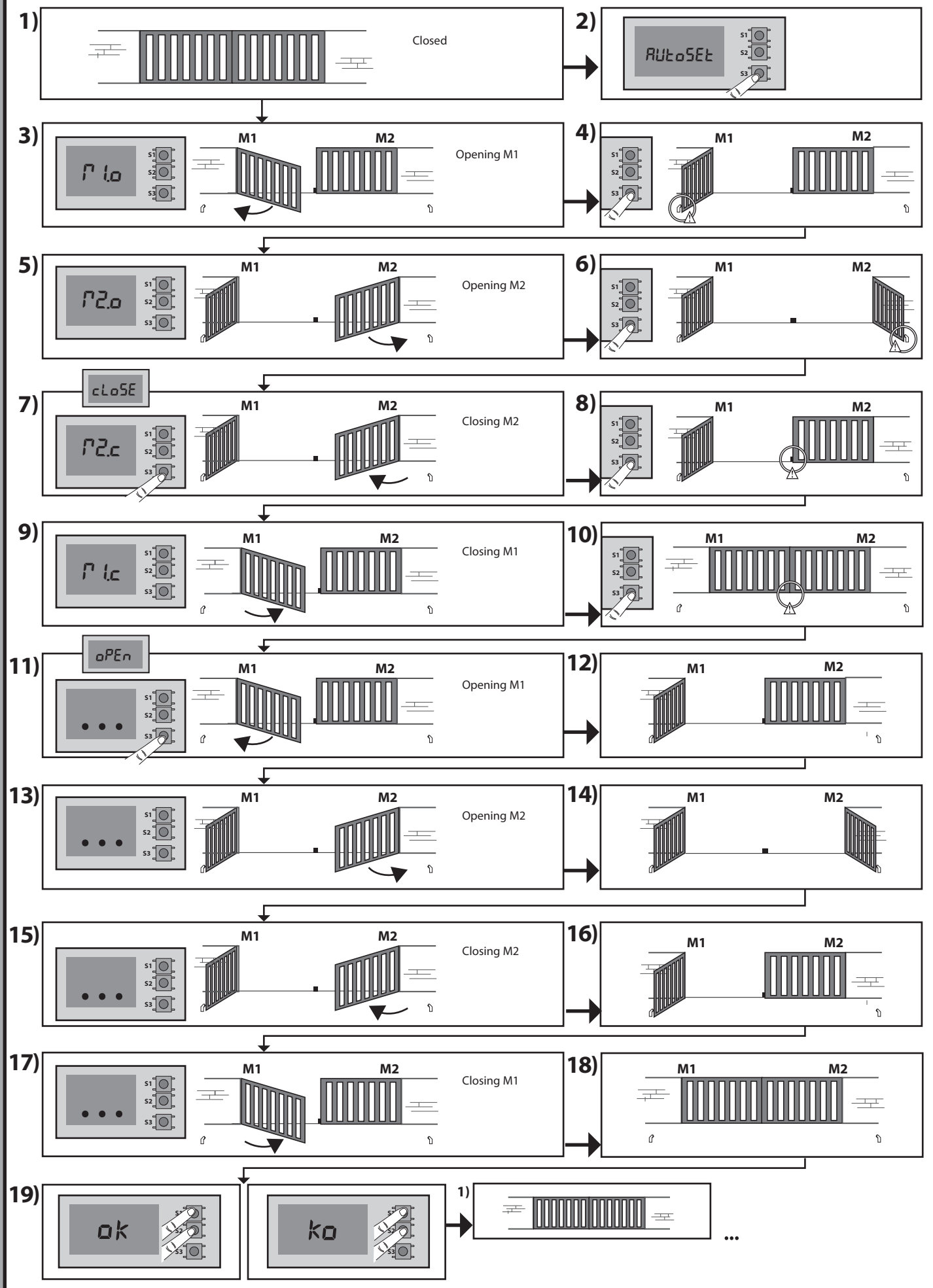

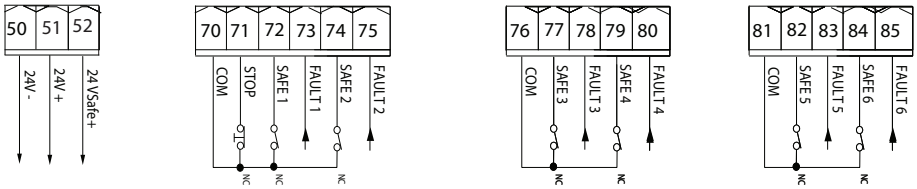
50 51 52
24V -
24V +
24 VSafe+
70 71 72 73 74 75
COM
STOP
SAFE 1
FAULT 1
SAFE 2
FAULT 2
NC
76 77 78 79 80
COM
SAFE 3
FAULT 3
SAFE 4
FAULT 4
81 82 83 84 85
COM
SAFE 5
FAULT 5
SAFE 6
FAULT 6

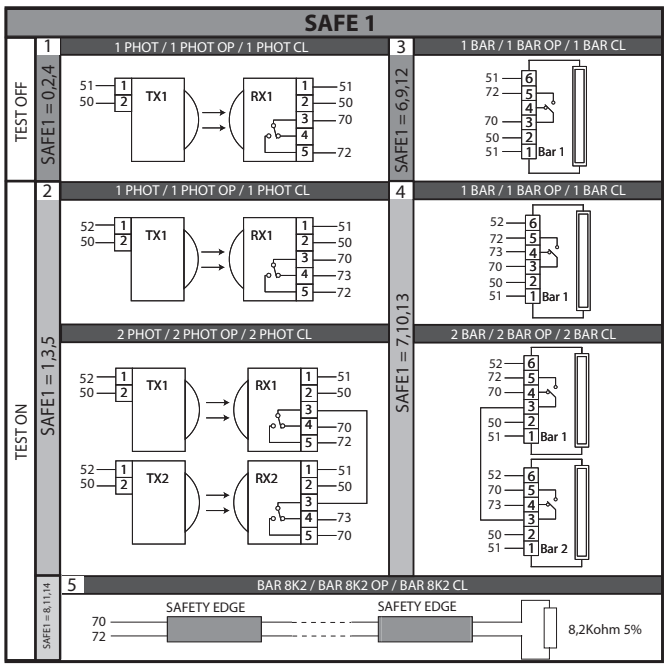
SAFE 1
TEST OFF
SAFE1 = 0,2,4
TEST ON
SAFE1 = 1,3,5
SAFE1 = 6,9,12
SAFE1 = 7,10,13
SAFE1 = 8,11,14
1 PHOT / 1 PHOT OP / 1 PHOT CL
1 BAR / 1 BAR OP / 1 BAR CL
2 PHOT / 2 PHOT OP / 2 PHOT CL
2 BAR / 2 BAR OP / 2 BAR CL
BAR 8K2 / BAR 8K2 OP / BAR 8K2 CL
SAFETY EDGE
SAFETY EDGE
8,2Kohm 5%
TX1
TX2
RX1
RX2
Bar 1
Bar 2

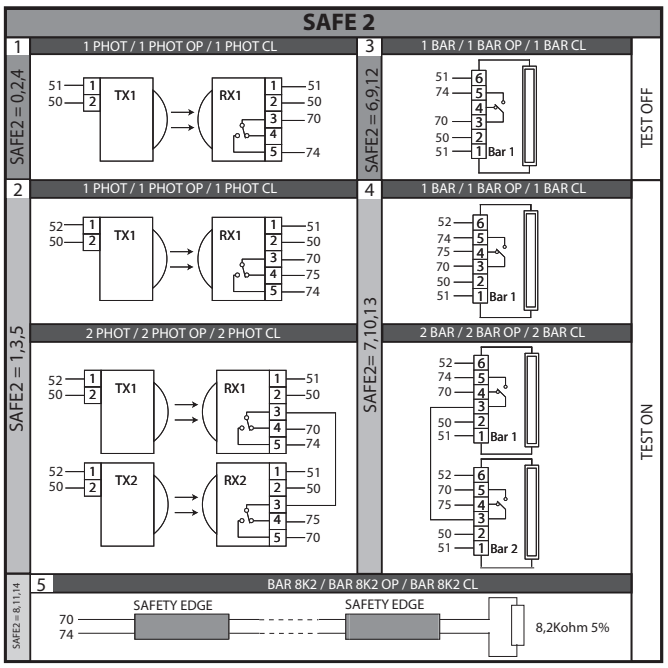
SAFE 2
TEST OFF
SAFE2 = 0,2,4
TEST ON
SAFE2 = 1,3,5
SAFE2 = 6,9,12
SAFE2= 7,10,13
SAFE2 = 8,11,14
1 PHOT / 1 PHOT OP / 1 PHOT CL
1 BAR / 1 BAR OP / 1 BAR CL
2 PHOT / 2 PHOT OP / 2 PHOT CL
2 BAR / 2 BAR OP / 2 BAR CL
BAR 8K2 / BAR 8K2 OP / BAR 8K2 CL
SAFETY EDGE
SAFETY EDGE
8,2Kohm 5%
TX1
TX2
RX1
RX2
Bar 1
Bar 2

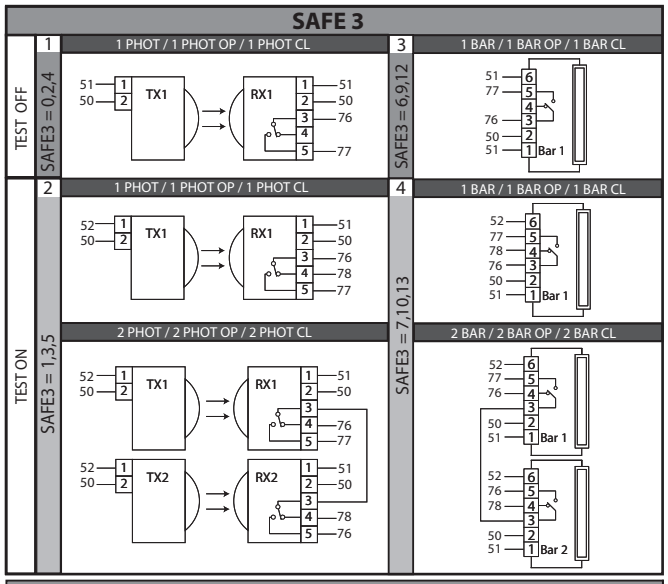
SAFE 3
TEST OFF
SAFE3 = 0,2,4
TEST ON
SAFE3 = 1,3,5
SAFE3 = 6,9,12
SAFE3 = 7,10,13
1 PHOT / 1 PHOT OP / 1 PHOT CL
1 BAR / 1 BAR OP / 1 BAR CL
2 PHOT / 2 PHOT OP / 2 PHOT CL
2 BAR / 2 BAR OP / 2 BAR CL
TX1
TX2
RX1
RX2
Bar 1
Bar 2

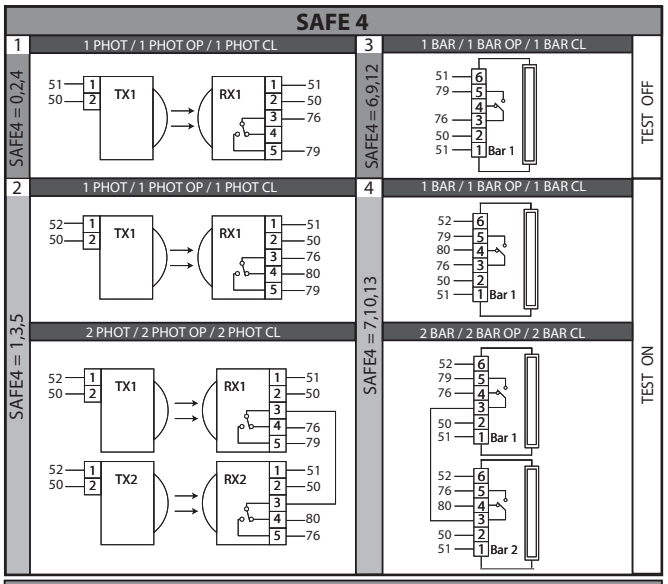
SAFE 4
TEST OFF
SAFE4 = 0,2,4
TEST ON
SAFE4 = 1,3,5
SAFE4 = 6,9,12
SAFE4 = 7,10,13
1 PHOT / 1 PHOT OP / 1 PHOT CL
1 BAR / 1 BAR OP / 1 BAR CL
2 PHOT / 2 PHOT OP / 2 PHOT CL
2 BAR / 2 BAR OP / 2 BAR CL
TX1
TX2
RX1
RX2
Bar 1
Bar 2

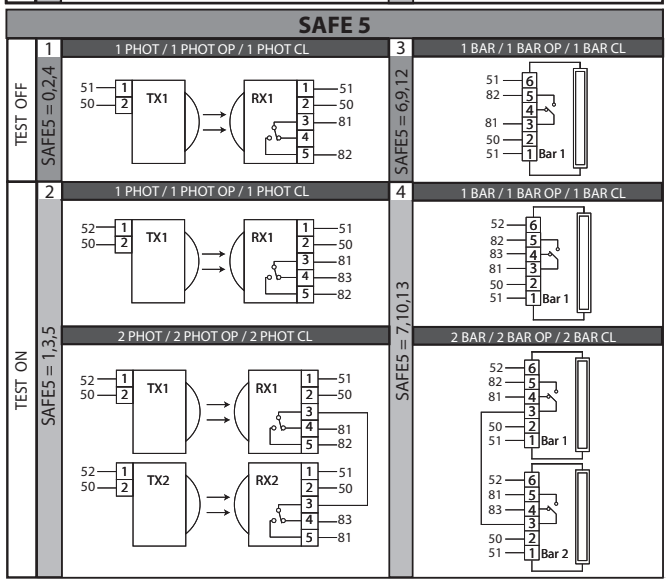
SAFE 5
TEST OFF
SAFE5 = 0,2,4
TEST ON
SAFE5 = 1,3,5
SAFE5 = 6,9,12
SAFE5 = 7,10,13
1 PHOT / 1 PHOT OP / 1 PHOT CL
1 BAR / 1 BAR OP / 1 BAR CL
2 PHOT / 2 PHOT OP / 2 PHOT CL
2 BAR / 2 BAR OP / 2 BAR CL
TX1
TX2
RX1
RX2
Bar 1
Bar 2

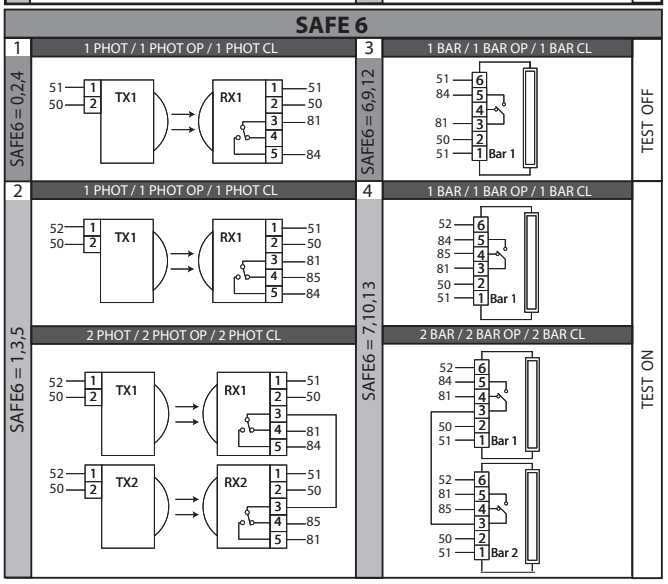
SAFE 6
TEST OFF
SAFE6 = 0,2,4
TEST ON
SAFE6 = 1,3,5
SAFE6 = 6,9,12
SAFE6 = 7,10,13
1 PHOT / 1 PHOT OP / 1 PHOT CL
1 BAR / 1 BAR OP / 1 BAR CL
2 PHOT / 2 PHOT OP / 2 PHOT CL
2 BAR / 2 BAR OP / 2 BAR CL
TX1
TX2
RX1
RX2
Bar 1
Bar 2

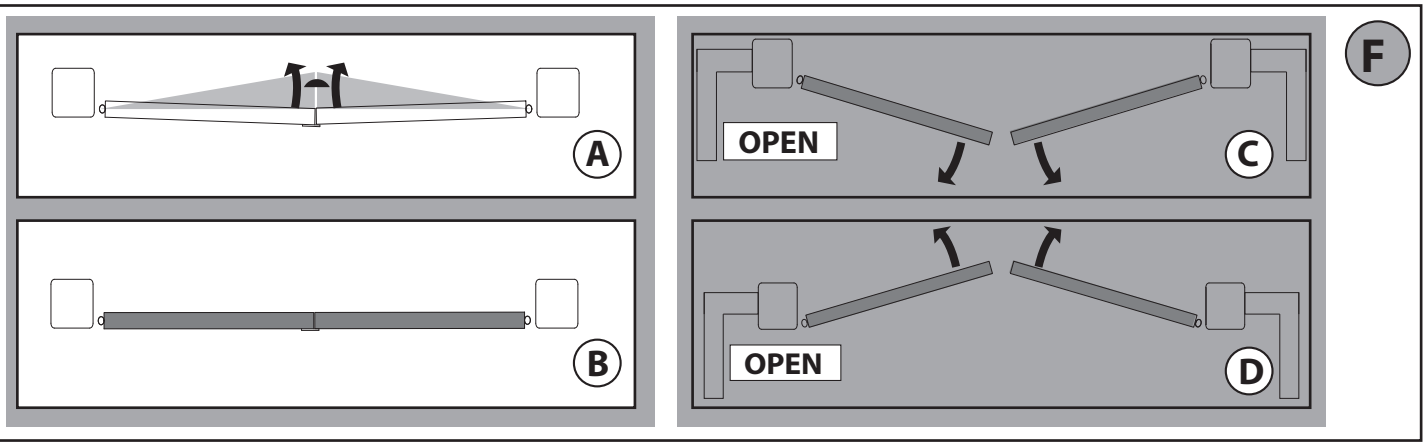
F
A
B
OPEN
C
OPEN
D

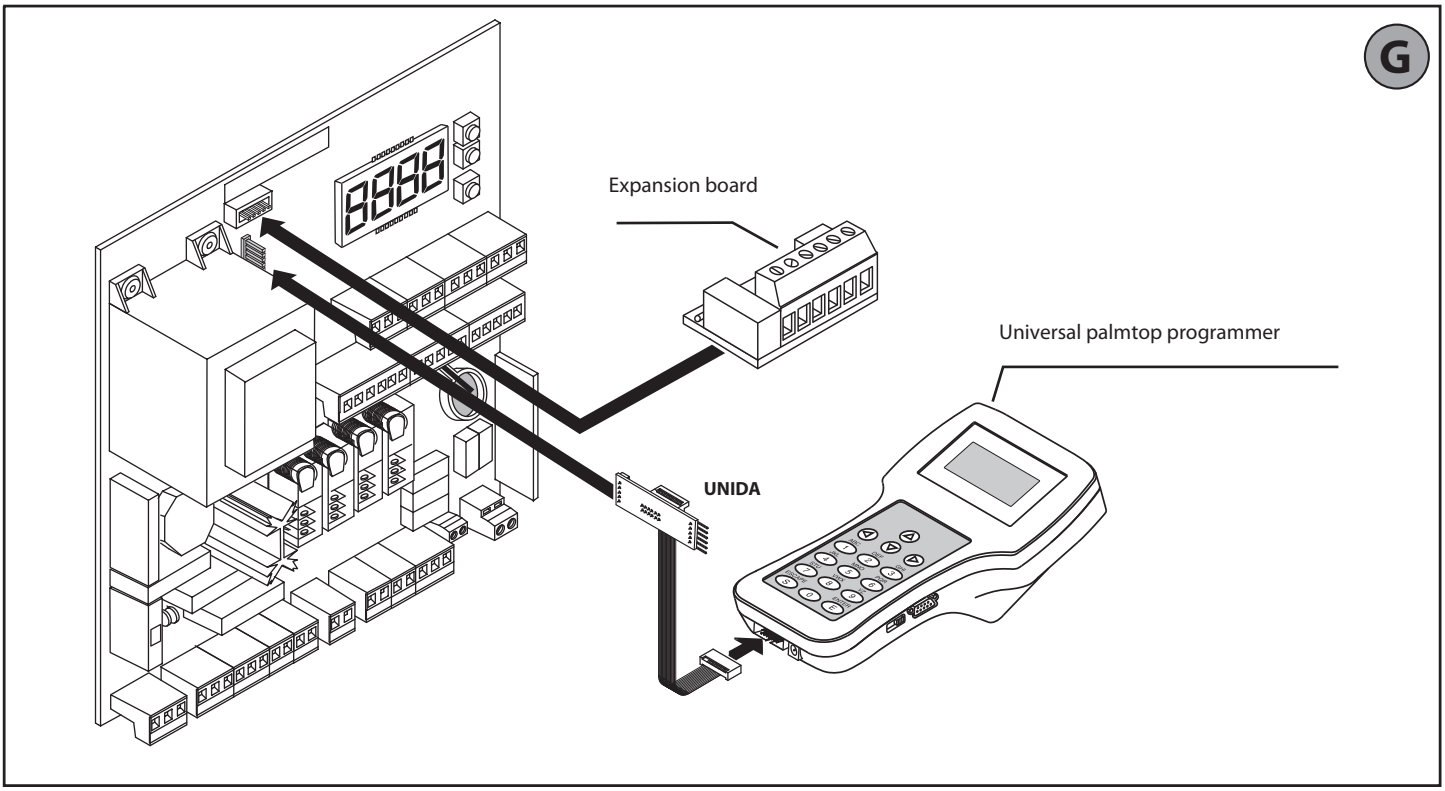
G
Expansion board
Universal palmtop programmer
UNIDA

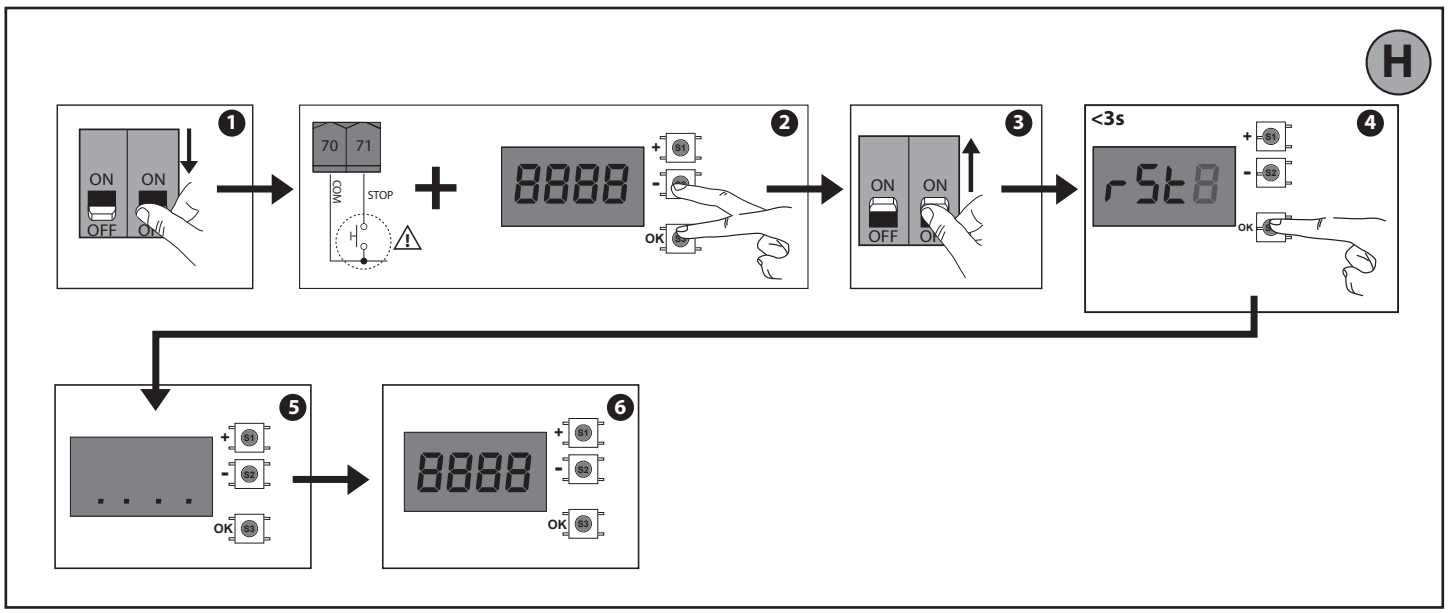
H
ON
OFF
70
71
COM
STOP
S1
S2
OK
<3s
rSt
S3

TIMER MENU PROGRAMMING

Values are programmable in 10 minutes' steps

	Monday	Tuesday	Wednesday	Thursday	Friday	Saturday	Sunday
00:00							
01:00							
02:00							
03:00							
04:00							
05:00							
06:00							
07:00							
08:00							
09:00							
10:00							
11:00							
12:00							
13:00							
14:00							
15:00							
16:00							
17:00							
18:00							
19:00							
20:00							
21:00							
22:00							
23:00							

	Monday	Tuesday	Wednesday	Thursday	Friday	Saturday	Sunday
Time band 1	Beginning 07.00	Beginning 07.00	Beginning 06.00	Beginning 07.00	Beginning 07.00	Beginning 10.00	Beginning 10.00
	End 12.00	End 12.00	End 12.00	End 12.00	End 12.00	End 12.00	End 12.00
Time band 2	Beginning 14.00	Beginning 00.00	Beginning 14.00	Beginning 00.00	Beginning 14.00	Beginning 00.00	Beginning 00.00
	End 18.00	End 00.00	End 18.00	End 00.00	End 18.00	End 00.00	End 00.00

No scheduled time zone. It is left at 0

ACCESS MENUS Fig. 1

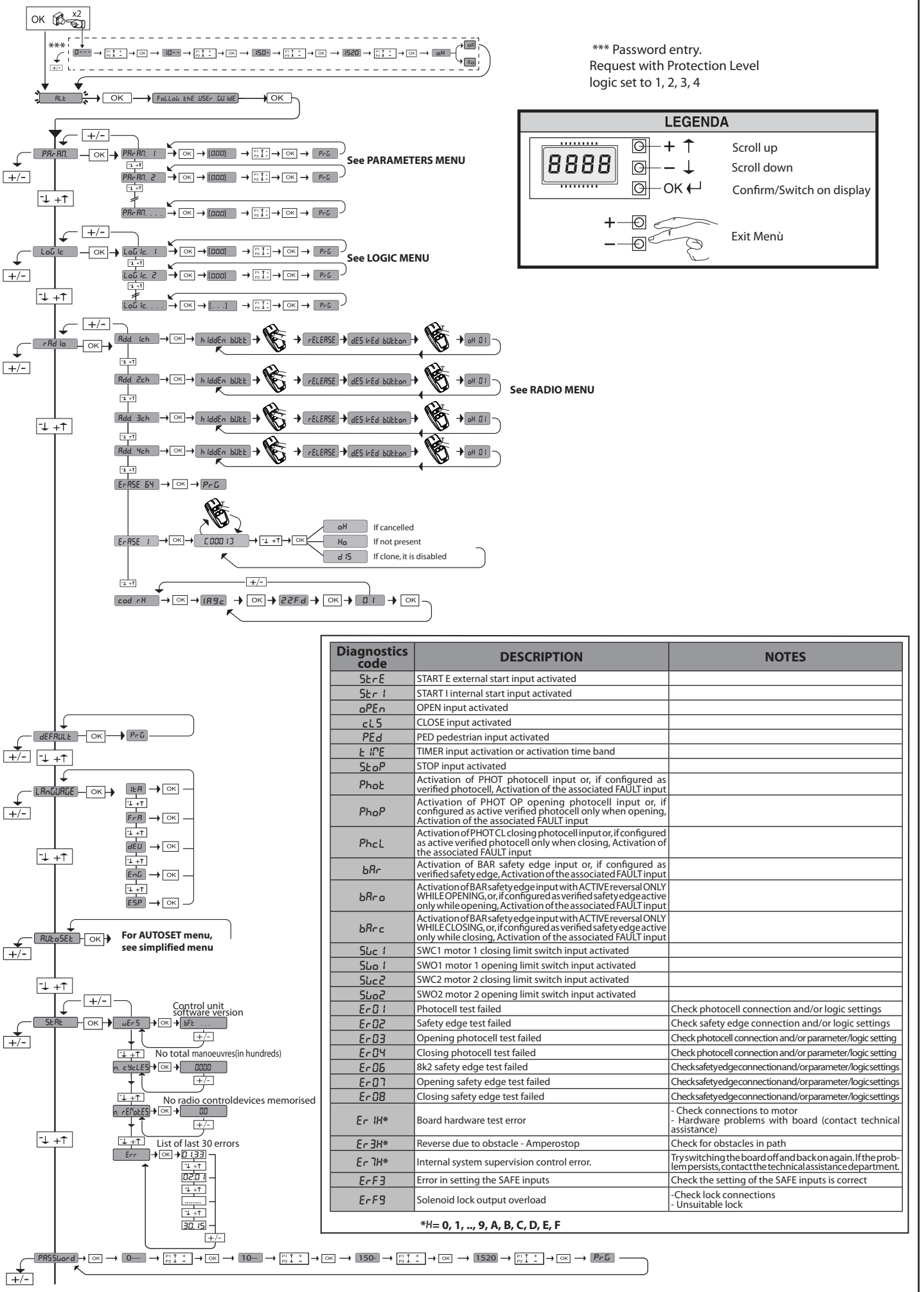

Diagnostics code	DESCRIPTION	NOTES
StrE	START E external start input activated	
Str I	START I internal start input activated	
oPEn	OPEN input activated	
cLS	CLOSE input activated	
PEd	PED pedestrian input activated	
t IME	TIMER input activation or activation time band	
StoP	STOP input activated	
Phot	Activation of PHOT photocell input or, if configured as verified photocell, Activation of the associated FAULT input	
PhoP	Activation of PHOT OP opening photocell input or, if configured as active verified photocell only when opening, Activation of the associated FAULT input	
PhcL	Activation of PHOT CL closing photocell input or, if configured as active verified photocell only when closing, Activation of the associated FAULT input	
bAr	Activation of BAR safety edge input or, if configured as verified safety edge, Activation of the associated FAULT input	
bAro	Activation of BAR safety edge input with ACTIVE reversal ONLY WHILE OPENING, or, if configured as verified safety edge active only while opening, Activation of the associated FAULT input	
bArc	Activation of BAR safety edge input with ACTIVE reversal ONLY WHILE CLOSING, or, if configured as verified safety edge active only while closing, Activation of the associated FAULT input	
Suc 1	SWC1 motor 1 closing limit switch input activated	
Suo 1	SWO1 motor 1 opening limit switch input activated	
Suc2	SWC2 motor 2 closing limit switch input activated	
Suo2	SWO2 motor 2 opening limit switch input activated	
Er01	Photocell test failed	Check photocell connection and/or logic settings
Er02	Safety edge test failed	Check safety edge connection and/or logic settings
Er03	Opening photocell test failed	Check photocell connection and/or parameter/logic setting
Er04	Closing photocell test failed	Check photocell connection and/or parameter/logic setting
Er06	8k2 safety edge test failed	Check safety edge connection and/or parameter/logic settings
Er07	Opening safety edge test failed	Check safety edge connection and/or parameter/logic settings
Er08	Closing safety edge test failed	Check safety edge connection and/or parameter/logic settings
Er H*	Board hardware test error	- Check connections to motor - Hardware problems with board (contact technical assistance)
Er3H*	Reverse due to obstacle - Amperostop	Check for obstacles in path
Er7H*	Internal system supervision control error.	Try switching the board off and back on again. If the problem persists, contact the technical assistance department.
ErF3	Error in setting the SAFE inputs	Check the setting of the SAFE inputs is correct
ErF9	Solenoid lock output overload	-Check lock connections - Unsuitable lock

***H= 0, 1, .., 9, A, B, C, D, E, F**

ACCESS MENUS Fig. 1

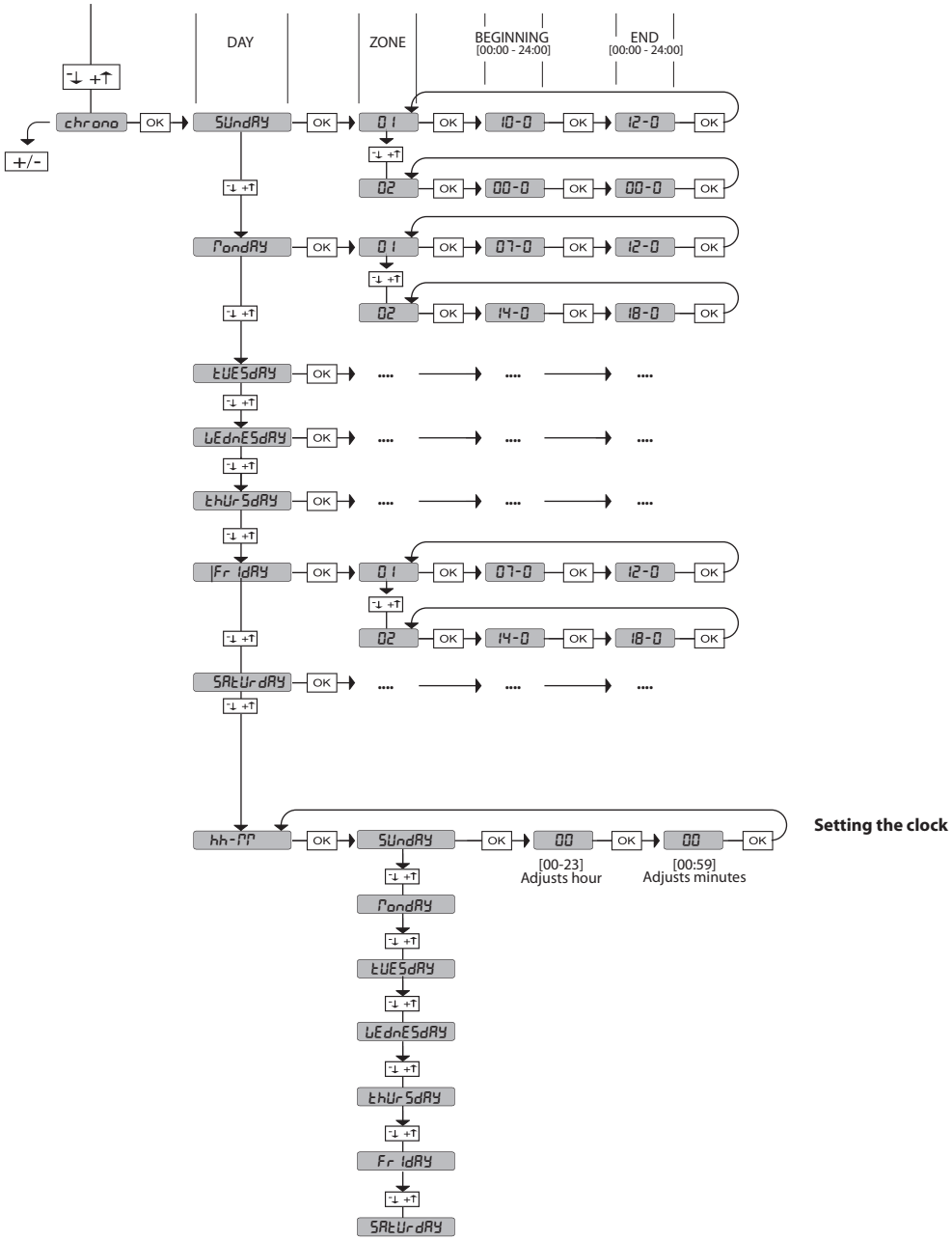

D8128650 0100_04

2) GENERAL INFORMATION

The **RIGEL 6** control panel comes with standard factory settings. Any change must be made using the programmer with built-in display or universal handheld programmer. The Control unit completely supports the EELINK protocol.
Its main features are:

- Check of 1 or 2 single-phase motors fitted with thermostat
- Control of 1 or 2 single phase motors
  Note: 2 motors of the same type must be used.
- Opening/closing limit switch control inputs, separate for each motor
- Separate inputs for safety devices
- Time band management
- Integrated obstacle detection
- Motor pre-heating with integrated sensor reading
- Adjustable electrodynamic braking
- Approach speed slow-down
- Built-in radio receiver rolling code with transmitter cloning.

The board has a terminal strip of the removable kind to make maintenance or replacement easier. It comes with a series of prewired jumpers to make the installer's job on site easier.
The jumpers concern terminals: 41-42, 41-43, 41-44, 41-45, 70-71, 70-72, 70-74, 76-77, 76-79, 81-82, 81-84. If the above-mentioned terminals are being used, remove the relevant jumpers.

TESTING

The **RIGEL 6** panel controls (checks) the run relays, triacs and safety devices (photocells and edges), before performing each opening and closing cycle.
If there is a malfunction, make sure that the connected devices are working properly and check the wiring.
ATTENTION! if the leaf is installed in a public area or if an automatic operating mode is enabled, we recommend a pair of photocells is installed at a height of 5 cm together with another pair at a height of 40-50 cm. Automatic mode means any control not voluntarily activated by the user (example: TCA function, chrono, etc.)

3) TECHNICAL SPECIFICATIONS		
Power supply	220-230V 50/60Hz(*)	
Low voltage/mains insulation	> 2MOhm 500V ⎓	
Dielectric rigidity	mains/LV 3750V~ for 1 minute	
Accessories power supply	24V~ (demand max. 1A) 24V~safe	
AUX 0	NO 220-230V~ (80W MAX) powered contact	⚠ AUX0+ AUX1+ AUX2= 80W MAX
AUX 1	NO 220-230V~ (80W MAX) powered contact	
AUX 2	NO contact (MAX 220-230V~ 80W)	
AUX 3	NO contact (Max 24V~)	10W MAX
LOCK	Output for 12V⎓ solenoid lock:	10W MAX
Dimensions	see **Fig. B**	
Fuses	see **Fig. C**	
N° of combinations	4 billion	
Max.n° of transmitters that can be memorized	63	

(*other voltages to order)

Use cycle	continuous	continuous	1 min. ON/ 2 min. OFF	1 min. ON/ 2 min. OFF
Operating temperature range	-20°C/+50°C	-20°C/+55°C	-20°C/+50°C	-20°C/+55°C
Maximum motor power 220-230V	2x375 W 1x750 W	2x250 W 1x500 W	2x650 W 1x750 W	2x500 W 1x750 W
Maximum motor power110-120V	2x320 W 1x390 W			

⚠ **M1+M2+AUX0+AUX1+AUX2+AUX3+LOCK= 1300W MAX T=+50°C**

Usable transmitter versions:
All ROLLING CODE transmitters compatible with ((ER-Ready))

4) TUBE ARRANGEMENT Fi g. A

5) TERMINAL BOARD WIRING Fig. C

WARNINGS - When performing wiring and installation, refer to the standards in force and, whatever the case, apply good practice principles.
Wires carrying different voltages must be kept physically separate from each other, or they must be suitably insulated with at least 1mm of additional insulation.
Wires must be secured with additional fastening near the terminals, using devices such as cable clamps.
All connecting cables must be kept far enough away from the dissipater.

	Terminal	Definition	Description
Power supply	L	LINE	Single-phase power supply 220-230V 50/60Hz(*)
	N	NEUTRAL	
	GND	EARTH	
Motor	10	MOT1 RUN	Connection motor 1. Time lag during closing.
	11	MOT 1 COM	
	12	MOT1 RUN	
	14	MOT2 RUN	Connection motor 2. Time lag during opening. ⚠ Note: if "i Pot.on." = 1 do not connect any wires to terminals 14-15-16
	15	MOT 2 COM	
	16	MOT2 RUN	
Aux	20	AUX 1 - 220-230V~ POWERED CONTACT ⚠	AUX 0 configurable output - Default setting FLASHING LIGHT. MONOSTABLE RADIO CHANNEL/ SCA GATE OPEN LIGHT/ COURTESY LIGHT command/ ZONE LIGHT command/ STAIR LIGHT/ GATE OPEN ALARM/ FLASHING LIGHT/ SOLENOID LATCH/ MAGNETIC LOCK/ MAINTENANCE/ FLASHING LIGHT AND MAINTENANCE / GATE STATUS / BISTABLE RADIO CHANNEL / TIMED RADIO CHANNEL. Refer to "AUX output configuration" table.
	21		
	22	AUX 1 - 220-230V~ POWERED CONTACT ⚠	AUX 1 configurable output - Default setting ZONE LIGHT Output. MONOSTABLE RADIO CHANNEL/ SCA GATE OPEN LIGHT/ COURTESY LIGHT command/ ZONE LIGHT command/ STAIR LIGHT/ GATE OPEN ALARM/ FLASHING LIGHT/ SOLENOID LATCH/ MAGNETIC LOCK/ MAINTENANCE/ FLASHING LIGHT AND MAINTENANCE / GATE STATUS / BISTABLE RADIO CHANNEL / TIMED RADIO CHANNEL. Refer to "AUX output configuration" table.
	23		
	24	AUX 2 - FREE CONTACT (N.O.)	AUX 2 configurable output - Default setting SCA GATE OPEN LIGHT Output. MONOSTABLE RADIO CHANNEL/ SCA GATE OPEN LIGHT/ COURTESY LIGHT command/ ZONE LIGHT command/ STAIR LIGHT/ GATE OPEN ALARM/ FLASHING LIGHT/ SOLENOID LATCH/ MAGNETIC LOCK/ MAINTENANCE/ FLASHING LIGHT AND MAINTENANCE / GATE STATUS / BISTABLE RADIO CHANNEL / TIMED RADIO CHANNEL. Refer to "AUX output configuration" table.
	25		
	26	AUX 3 - FREE CONTACT (N.O.)	AUX 3 configurable output - Default setting MONOSTABLE RADIO CHANNEL Output. MONOSTABLE RADIO CHANNEL/ SCA GATE OPEN LIGHT/ COURTESY LIGHT command/ ZONE LIGHT command/ STAIR LIGHT/ GATE OPEN ALARM/ FLASHING LIGHT/ SOLENOID LATCH/ MAGNETIC LOCK/ MAINTENANCE/ FLASHING LIGHT AND MAINTENANCE / GATE STATUS / BISTABLE RADIO CHANNEL / TIMED RADIO CHANNEL. Refer to "AUX output configuration" table.
	27		
	28	LOCK 12V⎓	Type of lock logic= 0 - 12V⎓ solenoid latch output. Output activated with a pulse each time gate is opened or closed **(MODEL ECB)**
	29		Type of lock logic= 1 - 12V⎓ magnetic lock output. Output activated when gate is closed or closing
Limit switch	40		Not used
	41	+ REF SWE	Limit switch common
	42	SWC 1	Motor 1 closing limit switch SWC1 (N.C.).
	43	SWO 1	Motor 1 opening limit switch SWO1 (N.C.).
	44	SWC 2	Motor 2 closing limit switch SWC2 (N.C.).
	45	SWO 2	Motor 2 opening limit switch SWO2 (N.C.).
Accessories power supply	50	24V-	Accessories power supply output.
	51	24V+	
	52	24 Vsafe+	Tested safety device power supply output (photocell transmitter and safety edge transmitter). Output active only during operating cycle.

	Terminal	Definition	Description
Commands	60	Common	IC 1 and IC 2 inputs common
	61	IC 1	Configurable command input 1 (N.O.) - Default START E. START E / START I / OPEN / CLOSE / PED / TIMER / TIMER PED Refer to the "Command input configuration" table.
	62	IC 2	Configurable command input 2 (N.O.) - Default PED. START E / START I / OPEN / CLOSE / PED / TIMER / TIMER PED Refer to the "Command input configuration" table.
	63	Common	IC 3 and IC 4 inputs common
	64	IC 3	Configurable command input 3 (N.O.) - Default OPEN. START E / START I / OPEN / CLOSE / PED / TIMER / TIMER PED Refer to the "Command input configuration" table.
	65	IC 4	Configurable command input 4 (N.O.) - Default CLOSE. START E / START I / OPEN / CLOSE / PED / TIMER / TIMER PED Refer to the "Command input configuration" table.
Safety devices	70	Common	STOP, SAFE 1 and SAFE 2 inputs common
	71	STOP	The command stops movement. (N.C.) If not used, leave jumper inserted.
	72	SAFE 1	Configurable safety input 1 (N.C.) - Default PHOT. PHOT / PHOT TEST / PHOT OP / PHOT OP TEST / PHOT CL / PHOT CL TEST / BAR / BAR TEST / BAR 8K2/ BAR OP / BAR OP TEST / BAR 8K2 OP/ BAR CL / BAR CL TEST / BAR 8K2 CL. Refer to the "Safety input configuration" table.
	73	FAULT 1	Test input for safety devices connected to SAFE 1.
	74	SAFE 2	Configurable safety input 2 (N.C.) - Default BAR. PHOT / PHOT TEST / PHOT OP / PHOT OP TEST / PHOT CL / PHOT CL TEST / BAR / BAR TEST / BAR 8K2/ BAR OP / BAR OP TEST / BAR 8K2 OP/ BAR CL / BAR CL TEST / BAR 8K2 CL Refer to the "Safety input configuration" table.
	75	FAULT 2	Test input for safety devices connected to SAFE 2.
	76	Common	SAFE 3 and SAFE 4 inputs common
	77	SAFE 3	Configurable safety input 3 (N.C.) - Default PHOT OP. PHOT / PHOT TEST / PHOT OP / PHOT OP TEST / PHOT CL / PHOT CL TEST / BAR / BAR TEST / BAR OP / BAR OP TEST / BAR CL / BAR CL TEST / Refer to the "Safety input configuration" table.
	78	FAULT 3	Test input for safety devices connected to SAFE 3.
	79	SAFE 4	Configurable safety input 4 (N.C.) - Default PHOT CL. PHOT / PHOT TEST / PHOT OP / PHOT OP TEST / PHOT CL / PHOT CL TEST / BAR / BAR TEST / BAR OP / BAR OP TEST / BAR CL / BAR CL TEST / Refer to the "Safety input configuration" table.
	80	FAULT 4	Test input for safety devices connected to SAFE 4.
	81	Common	SAFE 5 and SAFE 6 inputs common
	82	SAFE 5	Configurable safety input 5 (N.C.) - Default PHOT. PHOT / PHOT TEST / PHOT OP / PHOT OP TEST / PHOT CL / PHOT CL TEST / BAR / BAR TEST / BAR OP / BAR OP TEST / BAR CL / BAR CL TEST / Refer to the "Safety input configuration" table.
	83	FAULT 5	Test input for safety devices connected to SAFE 5.
	84	SAFE 6	Configurable safety input 6 (N.C.) - Default BAR. PHOT / PHOT TEST / PHOT OP / PHOT OP TEST / PHOT CL / PHOT CL TEST / BAR / BAR TEST / BAR OP / BAR OP TEST / BAR CL / BAR CL TEST / Refer to the "Safety input configuration" table.
	85	FAULT 6	Test input for safety devices connected to SAFE 6.
Antenna	Y	ANTENNA	Antenna input. Use an antenna tuned to 433MHz. Use RG58 coax cable to connect the Antenna and Receiver. Metal bodies close to the antenna can interfere with radio reception. If the transmitter's range is limited, move the antenna to a more suitable position.
	#	SHIELD	
NTC		NTC	Input for temperature sensor connection

AUX output configuration
Aux logic= 0 - MONOSTABLE RADIO CHANNEL output. Contact stays closed for 1s when radio channel is activated.
Aux logic= 1 - SCA GATE OPEN LIGHToutput. Contact stays closed during opening and with leaf open, intermittent during closing, open with leaf closed.
Aux logic= 2 - COURTESY LIGHT command output. Contact stays on for 90 seconds after the last operation.
Aux logic= 3 - ZONE LIGHT command output. Contact stays closed for the full duration of operation.
Aux logic= 4 - STAIR LIGHT output. Contact stays closed for 1 second at start of operation.
Aux logic= 5 - GATE OPEN ALARM output. Contact stays closed if the leaf stays open for double the set TCA time.
Aux logic= 6 - FLASHING LIGHT output. Contact stays closed while leaves are operating.
Aux logic= 7 - SOLENOID LATCH output. Contact stays closed for 2 seconds each time gate is opened or closed.
Aux logic= 8 - MAGNETIC LOCK output. Contact stays closed when gate is closed and while it is closing.
Aux logic= 9 - MAINTENANCE output. Contact stays closed once the value set for the Maintenance parameter is reached, to report that maintenance is required.
Aux logic= 10 - FLASHING LIGHT AND MAINTENANCE output. Contact stays closed while leaves are operating. If the value set for the Maintenance parameter is reached, once the gate has finished moving and the leaf is closed, the contact closes for 10 sec. and opens for 5 sec. 4 times to report that maintenance is required.

AUX output configuration
Aux logic= 11 - Not available
Aux logic= 12 - Not available
Aux logics= 13 - GATE STATUS output Contact stays closed while gate is closed.
AUX logics= 14 - BISTABLE RADIO CHANNEL output The contact changes status (open-closed) when the radio channel is activated
AUX logics= 15 - TIMED RADIO CHANNEL output The contact remains closed for a programmable length of time when the radio channel is activated (output time) If, during this time, the button is pressed again, counting starts all over again.
Command input configuration
IC logic= 0 - Input configured as Start E. Operation according to STEP-BY-STEP PRO. logic. External start for traffic light control.
IC logic= 1 - Input configured as Start I. Operation according to STEP-BY-STEP PRO. logic. Internal start for traffic light control.
IC logic= 2 - Input configured as Open. The command causes the leaves to open. If the input stays closed, the leaves stay open until the contact is opened. When the contact is open, the automated device closes following the TCA time, where activated.
IC logic= 3 - Input configured as Closed. The command causes the leaves to close.
IC logic= 4 - Input configured as Ped. The command causes the leaf to open to the pedestrian (partial) opening position. Operation according to STEP-BY-STEP. logic
IC logic= 5 - Input configured as Timer. Operation same as open except closing is guaranteed even after a mains power outage.
IC logic= 6 - Input configured as Timer Ped. The command causes the leaf to open to the pedestrian (partial) opening position. If the input stays closed, the leaf stays open until the contact is opened. If the input stays closed and a Start E, Start I or Open command is activated, a complete opening-closing cycle is performed before returning to the pedestrian opening position. Closing is guaranteed even after a mains power outage.
Safety input configuration
SAFE logic= 0 - Input configured as Phot (photocell) non tested (*). (fig.F, ref.1). Enables connection of devices not equipped with supplementary test contacts. When beam is broken, photocells are active during both opening and closing. When beam is broken during closing, movement is reversed only once the photocell is cleared. If not used, leave jumper inserted.
SAFE logic= 1 - Input configured as Phot test (tested photocell). (fig.F, ref.2). Switches photocell testing on at start of operation. When beam is broken, photocells are active during both opening and closing. When beam is broken during closing, movement is reversed only once the photocell is cleared.
SAFE logic= 2 - Input configured as Phot op (photocell active during opening only) non tested (*). (fig.F, ref.1). Enables connection of devices not equipped with supplementary test contacts. In the event beam is broken, photocell operation is disabled during closing. During opening, stops motion for as long as the photocell beam stays broken. If not used, leave jumper inserted.
SAFE logic= 3 - Input configured as Phot op test (tested photocell active during opening only (fig.F, ref.2). Switches photocell testing on at start of operation. In the event beam is broken, photocell operation is disabled during closing. During opening, stops motion for as long as the photocell beam stays broken.
SAFE logic= 4 - Input configured as Phot cl (photocell active during closing only) non tested (*). (fig.F, ref.1). Enables connection of devices not equipped with supplementary test contacts. In the event beam is broken, photocell operation is disabled during opening. During closing, movement is reversed immediately. If not used, leave jumper inserted.
SAFE logic= 5 - Input configured as Phot cl test (tested photocell active during closing only (fig.F, ref.2). Switches photocell testing on at start of operation. In the event beam is broken, photocell operation is disabled during opening. During closing, movement is reversed immediately.
SAFE logic= 6 - Input configured as Bar (safety edge) non tested (*). (fig.F, ref.3). Enables connection of devices not equipped with supplementary test contacts. The command reverses movement for 2 sec.. If not used, leave jumper inserted.
SAFE logic= 7 - Input configured as Bar (tested safety edge (fig.F, ref.4). Switches safety edge testing on at start of operation. The command reverses movement for 2 sec.
SAFE logic= 8 - Input configured as Bar 8k2 (fig.F, ref.5). Input for resistive edge 8K2. The command reverses movement for 2 sec.
SAFE logic=9 Input configured as Bar op, safety edge with active inversion only while opening, if activated while closing, the automation stops (STOP) (Fig. F, ref. 3). Allows connecting devices not fitted with supplementary test contact. The operation while opening causes the movement to be reversed for 2 seconds, the operation while closing causes the automation to stop. If not used, leave jumper inserted.
SAFE logic=10 Input configured as Bar op test, safety edge checked with active inversion only while opening, if activated while closing, the automation stops (STOP) (Fig. F, ref. 4). Activates testing safety edges when starting operation. The operation while opening causes the movement to be reversed for 2 seconds, the operation while closing causes the automation to stop.
SAFE logic=11 Input configured as Bar 8k2 op, 8k2 safety edge with active inversion only while opening, if activated while closing, the automation stops (STOP) (Fig. F, ref. 5). The operation while opening causes the movement to be reversed for 2 seconds, the operation while closing causes the automation to stop.
SAFE logic=12 Input configured as Bar cl, safety edge with active inversion only while closing, if activated while opening, the automation stops (STOP) (Fig. F, ref. 3). Allows connecting devices not fitted with supplementary test contact. The operation while closing causes the movement to be reversed for 2 seconds, the operation while opening causes the automation to stop. If not used, leave jumper inserted.
SAFE logic=13 Input configured as Bar cl test, safety edge checked with active inversion only while closing, if activated while opening, the automation stops (STOP) (Fig. F, ref. 4). Activates testing safety edges when starting operation. The operation while closing causes the movement to be reversed for 2 seconds, the operation while opening causes the automation to stop.
SAFE logic=14 Input configured as Bar 8k2 cl, safety edge with active inversion only while closing, if activated while opening, the automation stops (STOP) (Fig. F, ref. 5). The operation while closing causes the movement to be reversed for 2 seconds, the operation while opening causes the automation to stop.

(*) If "D" type devices are installed (as defined by EN12453), connect in unverified mode, foresee mandatory maintenance at least every six months.

6) SAFETY DEVICES
Note: only use receiving safety devices with free changeover contact.

6.1) TESTED DEVICES Fig. F

6.2) CONNECTION OF 1 PAIR OF NON-TESTED PHOTOCELLS FIG. D

7) CALLING UP MENUS: FIG. 1

7.1) PARAMETERS MENU (PArAM) (PARAMETERS TABLE "A")

7.2) LOGIC MENU (LoG Ic) (LOGIC TABLE "B")

7.3) RADIO MENU (rAd Io) (RADIO TABLE "C")
- IMPORTANT NOTE: THE FIRST TRANSMITTER MEMORIZED MUST BE IDENTIFIED BY ATTACHING THE KEY LABEL (MASTER).
In the event of manual programming, the first transmitter assigns the RECEIVER'S KEY CODE: this code is required to subsequently clone the radio transmitters.
The Clonix built-in on-board receiver also has a number of important advanced features:
- Cloning of master transmitter (rolling code or fixed code).
- Cloning to replace transmitters already entered in receiver.
- Transmitter database management.
- Receiver community management.

To use these advanced features, refer to the universal handheld programmer's instructions and to the general receiver programming guide.
If a 4-channel remote control is used, keep one for the STOP function.

7.4) DEFAULT MENU (dEFAULt)
Restores the controller's DEFAULT factory settings. Following this reset, you will need to run the AUTOSET function again.

7.5) LANGUAGE MENU (LAnGUAGE)
Used to set the programmer's language on the display.

7.6) AUTOSET MENU (AUtoSEt)
Autoset for motors with limit switches (**Fig. E1**):
1 - Place the leaves at the closing limit switch.
2 - Start an autoset from the relative menu, press the OK button start motor 1's opening manoeuvre.
3 - The display shows "M1.o".
4 - Wait for the opening limit switch to be triggered to finish motor 1's opening manoeuvre.
5 - Motor 2 starts opening automatically. A displays "M2.o".
6 - Wait for the opening limit switch to be triggered to finish motor 2's opening manoeuvre, the display shows the message "CLOSE".
7 - Press the OK button to start motor 2's closing manoeuvre. A displays "M2.c".
8 - Wait for the closing limit switch to be triggered to finish motor 2's closing manoeuvre.
9 - Motor 1 starts closing automatically. A displays "M1.c".
10 - Wait for the closing limit switch to be triggered to finish motor 1's closing manoeuvre.
If the work time has been stored correctly, the display shows "OPEN".
11 - Press the OK button to start the second cycle and calculate the torque value required for the leaf/ves to move, the display shows "M1.o".
12 - Wait for the opening limit switch to be triggered to finish motor 1's opening manoeuvre.
13 - Motor 2 starts opening automatically. A displays "M2.o".
14 - Wait for the opening limit switch to be triggered to finish motor 2's opening manoeuvre, the display shows the message "CLOSE".
15 - Press the OK button to start motor 2's closing manoeuvre. A displays "M2.c".
16 - Wait for the closing limit switch to be triggered to finish motor 2's closing manoeuvre.
17 - Motor 1 starts closing automatically. A displays "M1.c".
18 - Wait for the closing limit switch to be triggered to finish motor 1's closing manoeuvre.
19 - If the autoset has completed correctly, the display shows "OK", if autoset fails, the display shows the message "KO" and the operation must be repeated from phase 1.
If motor 1 is set to active, the phases relative to motor 2 are not performed.

Autoset for motors with no limit switches (**Fig. E2**):
1 - Place the leaves at the closing stops.
2 - start an autoset from the relative menu, pressing the OK button start motor 1's opening manoeuvre.
3 - The display shows "M1.o".
4 - ress the OK button to finish motor 1's opening manoeuvre. A displays "M2.o".
5 - Motor 2 starts opening automatically.
6 - Press the OK button to finish motor 2's opening manoeuvre, the display shows "CLOSE".
7 - Press the OK button to start motor 2's closing manoeuvre. A displays "M2.c"
8 - Press the OK button to finish motor 2's closing manoeuvre. A displays "M1.c"
9 - Motor 1 starts closing automatically.
10 - Press the OK button to finish motor 1's closing manoeuvre.
If the work time has been stored correctly, the display shows "OPEN".
11 - Press the OK button to start the second cycle and calculate the torque value required for the leaf/ves to move, the display shows "M1.o".
12 - Wait for motor 1's work time to intervene to finish motor 1's opening manoeuvre.
13 - Motor 2 starts opening automatically. A displays "M2.o".
14 - Wait for Motor 2's work time to intervene to finish motor 2's opening manoeuvre, the display shows the message "CLOSE".
15 - Press the OK button to start motor 2's closing manoeuvre. A displays "M2.c"
16 - Wait for motor 2's work time to intervene to finish motor 2's closing manoeuvre.
17 - Motor 1 starts closing automatically. A displays "M1.c"
18 - Wait for motor 1's work time to intervene to finish motor 1's closing manoeuvre.
19 - If the autoset has completed correctly, the display shows "OK", if autoset fails, the display shows the message "KO" and the operation must be repeated from phase 1.
If motor 1 is set to active, the phases relative to motor 2 are not performed.

During this stage, it is important to avoid breaking the photocells' beams, causing the safety devices to intervene, and not to use the START, STOP, OPEN and CLOSE controls or the display.
Once this operation is completed, the control unit will have automatically set the optimum parameters and work times. Check them and, where necessary, edit them as described in the programming section.

WARNING!! Check that the force of impact measured at the points provided for by standard EN 12445 is lower than the value laid down by standard EN 12453.

The impact forces must be limited with the use of active coasts accordance with EN12978.

Warning!! While the autoset function is running, the obstacle detection function is not active. Consequently, the installer must monitor the automated system's movements and keep people and property out of range of the automated system.

7.7)INSTALLATION TEST PROCEDURE
1. Apply pressure-sensitive or electro-sensitive protective devices (such as a safety edge)
2. Run the AUTOSET cycle (*)
3. Check the impact forces: if they fall within the limits. Skip to point 5 of the procedure, otherwise
4. Allow the drive to move only in "Deadman" mode
5. Make sure all devices designed to detect obstacles within the system's operating range are working properly

(*) Before running the autoset function, make sure you have performed all the assembly and make-safe operations correctly, as set out in the installation warnings in the drive's manual and have set the opening/closing strength, slow-down and slow-down time parameters.

7.8) STATISTICS MENU
Used to view the version of the board, the total number of operations (in hundreds), the number of transmitters memorized and the last 30 errors (the first 2 digits indicate the position, the last 2 give the error code). Error 01 is the most recent.

7.9) PASSWORD MENU
Used to set a password for the board's wireless programming via the U-link network. With "PROTECTION LEVEL" logic set to 1,2,3,4, the password is required to access the programming menus. After 10 consecutive failed attempts to log in, you will need to wait 3 minutes before trying again. During this time, whenever an attempt is made to log in, the display will read "BLOC". The default password is 1234.

7.10) CHRONO MENU Fig.J
Allows setting the operation by time bands.
Up to two daily time bands during which the gate remains open (from Monday to Sunday) can be set.
Within the time slot opening of the doors is performed that remain open until the end of the time slot.

8) CLOSING LIMIT SWITCH PRESSURE Fig. G Ref. A-B
OPENING DIRECTION Fig. G Ref. C-D

9) CONNECTION WITH EXPANSION BOARDS AND UNIVERSAL HANDHELD PROGRAMMER. Refer to specific manual.

10) U-LINK OPTIONAL MODULES
Refer to the U-link instructions for the modules.
The use of some models causes lowered radio capacity. Adjust the system using an appropriate antenna tuned to 433MHxz.

11) RESTORING FACTORY SETTINGS (Fig.I)
WARNING: this operation will restore the control unit's factory settings and all transmitters stored in its memory will be deleted.
WARNING! Incorrect settings can result in damage to property and injury to people and animals.
- Cut off power to the board (Fig.I ref.1)
- Open the Stop input and press the - and OK keys together (Fig.I ref.2)
- Switch on the board's power (Fig.I ref.3)
- The display will read RST; confirm within 3 sec. by pressing the OK key (Fig.I ref.4)
- Wait for the procedure to finish (Fig.I ref.5)
- Procedure finished (Fig.I ref.6)

WARNING! Incorrect settings can result in damage to property and injury to people and animals.

WARNING: Check that the force of impact measured at the points provided for by standard EN 12445 is lower than the value laid down by standard EN 12453.

Impact forces can be reduced by using deformable edges.

For best results, it is advisable to run the autoset function with the motors idle (i.e. not overheated by a considerable number of consecutive operations).

TABLE "A" - PARAMETERS MENU - (PArAM)

Parameter	min.	max.	Default	Personal	Definition	Description
uorK. t. Mot.1	3.0	180.0	60.0		Operation time motor 1 [s]	Sets the value of motor 1 / 2 work time in seconds At the end of an autoset it is set with the actual motor work value
uorK. t. Mot.2	3.0	180.0	60.0		Operation time motor 2 [s]	
PArt IAL oPEn inG	3	90	6		Partial opening M1 [s]	Time of partial opening following the activation of motor M1 PED pedestrian control
oPEn dELAY t IME	0	10	3		Motor 2 opening delay time [s]	Motor 2 opening delay time with respect to motor 1.
cLS dELAY t IME	0	25	3		Motor 1 closing delay time [s]	Motor 1 closing delay time with respect to motor 2.
SLou - doun t. Mot.1	0	30	0		Slow-down time motor 1 [s]	Sets the approach slow-down time. The slow-down time is subtracted from the work time. **NOTE:** Use this function only if a limit switch is installed. **NOTE:** Do not use with hydraulic motors. (***)
SLou - doun t. Mot.2	0	30	0		Slow-down time motor 2 [s]	
tcA	0	120	10		Automatic closing time [s]	Waiting time before automatic closing.
trF.LGHt.cLr.t	1	180	40		Time-to-clear traffic light zone [s]	Time-to-clear for the zone run through by traffic controlled by the traffic light.
oUtPUt t IME	1	240	10		Activation time of the timed output [s]	Activation length of timed radio channel output in seconds
oP.ForcE	1	99	50		Leaf force during opening [%]	Force exerted by leaf/leaves during opening. Represents the percentage of force delivered at speed in comparison with the maximum value. ⚠ **WARNING: It affects impact force directly: make sure that current safety requirements are met with the set value (*).** **If necessary, install anti-crushing safety devices (**).** (***)
cLS.ForcE	1	99	50		Leaf force during closing [%]	Force exerted by leaf/leaves during closing. Represents the percentage of force delivered at speed in comparison with the maximum value. ⚠ **WARNING: It affects impact force directly: make sure that current safety requirements are met with the set value (*).** **If necessary, install anti-crushing safety devices (**).** (***)
SLUd.ForcE	1	99	50		Forza motori in rallentamento [%]	Force exerted by leaf / and slowdown. It represents the percentage of power supplied to slow down. ⚠ **WARNING: It affects impact force directly: make sure that current safety requirements are met with the set value (*).** **If necessary, install anti-crushing safety devices (**).** (***)
brAKE	0	99	0		Braking [%]	Set the braking value from 0% (min.) to 99% (max.) according to the gate weight and the mechanical demands involved.
EMEr. brAKE	0	99	60		Emergency braking [%]	Sets the value between 0% (min.) and 99% (max.) of emergency braking, that is performed by activating the safety controls present at the inputs configured as BAR safety edge.
PrEHEAt.	0	99	30		Preheating [%]	Set the percentage value of the current from 0 (deactivated pre-heating) to 99% which can be made to pass through the motor windings to keep them at the right temperature. **NOTE: the NTC temperature sensor must be connected** The sensor must be placed and fixed in contact with the motor to detect the outside temperature
obSt.SEnS.	0	99	0		Obstacle sensitivity	It allows activating obstacle detection. The function is disabled when the parameter is set to 0, setting the value between 1 and the maximum value, obstacle sensitivity can be increased (max value = max sensitivity). It works only with the limit switches. ⚠ **ATTENTION: This obstacle detection function does not guarantee compliance with the safety regulations in force (*). To comply with the current safety regulations, install adequate anti-crushing safety devices (**).** ⚠ **ATTENTION: The system detects the obstacle only if the leaf is stopped; no obstacles breaking the leaf without managing to stop it are detected.** **Detection takes place only if the leaf meeting the obstacle is moving at normal speed. The obstacle is not detected during slow-down.** (***)
MA intEnAncE	0	250	0		Programming number of operations for maintenance threshold [in hundreds]	Allows you to set a number of operations after which the need for maintenance will be reported on the AUX output configured as Maintenance or Flashing Light and Maintenance .

(*) In the European Union, apply standard EN 12453 for force limitations, and standard EN 12445 for measuring method.

(**) The impact forces must be limited using active coasts comply with EN12978

(***) ⚠ CAUTION: After a parameter change will need to run an autoset function if the "obstacle sensitivity" is active.

INSTALLATION MANUAL

TABLE "B" - LOGIC MENU - (LoG Ic)

Logic	Definition	Default	Cross out setting used	Optional extras
tcA	**Automatic Closing Time**	0	0	Logic not enabled
			1	Switches automatic closing on
FASt cLS.	**Fast closing**	0	0	Logic not enabled
			1	Closes 3 seconds after the photocells are cleared before waiting for the set TCA to elapse.
StEP-by-StEP MouEMnt	**Step-by-step movement**	0	0	Inputs configured as Start E, Start I, Ped operate with 4-step logic.
			1	Inputs configured as Start E, Start I, Ped operate with 3-step logic. Pulse during closing reverses movement.
			2	Inputs configured as Start E, Start I, Ped operate with 2-step logic. Movement reverses with each pulse.
PrE-ALArM	**Pre-alarm**	0	0	The flashing light comes on at the same time as the motor(s) start.
			1	The flashing light comes on approx. 3 seconds before the motor(s) start.
hoLd-to-rUn	**Deadman**	0	0	Pulse operation.
			1	Deadman mode. Input 61 is configured as OPEN UP. Input 62 is configured as CLOSE UP. Operation continues as long as the OPEN UP or CLOSE UP keys are held down. ⚠ **WARNING: safety devices are not enabled.**
			2	Emergency Deadman mode. Usually pulse operation. If the board fails the safety device tests (photocell or safety edge, Er0x) 3 times in a row, the device is switched to Deadman mode, which will stay active until the OPEN UP or CLOSE UP keys are released. Input 61 is configured as OPEN UP. Input 62 is configured as CLOSE UP. ⚠ **WARNING: with the device set to Emergency Deadman mode, safety devices are not enabled.**
ibL oPEn	**Block pulses during opening**	0	0	Pulse from inputs configured as Start E, Start I, Ped has effect during opening.
			1	Pulse from inputs configured as Start E, Start I, Ped has no effect during opening.
| ibL tcA	**Block pulses during TCA**	0	0	Pulse from inputs configured as Start E, Start I, Ped has effect during TCA pause.
			1	Pulse from inputs configured as Start E, Start I, Ped has no effect during TCA pause.
ibL cLoSE	**Block pulses during closing**	0	0	Pulse from inputs configured as Start E, Start I, Ped has effect during closing.
			1	Pulse from inputs configured as Start E, Start I, Ped has no effect during closing.
rAM bLob c.oP	**Hammer during opening**	0	0	Logic not enabled
			1	Before opening completely, the gate pushes for approx. 2 seconds as it closes. This allows the solenoid lock to be released more easily. **IMPORTANT - Do not use this function if suitable mechanical stops are not in place.**
rAM bLob c.cL	**Hammer during closing**	0	0	Logic not enabled
			1	Before closing completely, the gate pushes for approx. 2 seconds as it opens. This allows the solenoid lock to be released more easily. **IMPORTANT - Do not use this function if suitable mechanical stops are not in place.**
bLoc PErS 15t	**Stop maintenance**	0	0	Logic not enabled
			1	If motors stay idle in fully open or fully closed position for more than one hour, they are switched on in the direction of the stop for approx. 3 seconds. This operation is performed every hour. NB: In hydraulic motors, this function serves to compensate a possible reduction in the volume of oil due to a drop in temperature during extended pauses, such as during the night, or due to internal leakage. **IMPORTANT - Do not use this function if suitable mechanical stops are not in place.**
PrESS Sbc	**Closing limit switch pressure**	0	0	Movement is stopped only when the closing limit switch trips: in this case, the tripping of the closing limit switch must be adjusted accurately (**Fig.G Ref.B**).
			1	Use when there is a mechanical stop in closed position. This function allows leaves to press against the mechanical stop without the Amperostop sensor interpreting this as an obstacle. Thus the rod continues its stroke for a few seconds after meeting the closing limit switch or as far as the mechanical stop. In this way, the leaves come to rest perfectly against the stop by allowing the closing limit switches to trip slightly earlier (**Fig.G Ref.A**).
1 MotOn	**1 motor active**	0	0	Both motors active (2 leaves).
			1	Only motor 1 active (1 leaf).
oPEn In othEr dIrEct.	**Open in other direction**	0	0	Standard operating mode (**See Fig.G Ref. C**).
			1	Opens in other direction to standard operating mode (**See Fig. G Ref.D**)
SAFE 1	**Configuration of safety input SAFE 1. 72**	0	0	Input configured as Phot (photocell).
			1	Input configured as Phot test (tested photocell).
			2	Input configured as Phot op (photocell active during opening only).

step-by-step mov.

	2 STEP	3 STEP	4 STEP
CLOSED	OPENS	OPENS	OPENS
DURING CLOSING			STOPS
OPEN	CLOSES	CLOSES	CLOSES
DURING OPENING		STOP + TCA	STOP + TCA
AFTER STOP	OPENS	OPENS	OPENS

ENGLISH

Logic	Definition	Default	Cross out setting used	Optional extras
SAFE 2	**Configuration of safety input SAFE 2. 74**	6	3	Input configured as Phot op test (tested photocell active during opening only).
			4	Input configured as Phot cl (photocell active during closing only).
SAFE 3	**Configuration of safety input SAFE 3. 77**	2	5	Input configured as Phot cl test (tested photocell active during closing only).
			6	Input configured as Bar, safety edge.
SAFE 4	**Configuration of safety input SAFE 4. 79**	4	7	Input configured as Bar, tested safety edge.
			8	Input configured as Bar 8k2 **(Inactive on SAFE 3,4,5,6).**
SAFE 5	**Configuration of safety input SAFE 4. 79**	0	9	Input configured as Bar OP, safety edge with inversion active only while opening. If while closing, the movement stops.
			10	Input configured as Bar OP TEST, safety edge tested with inversion active only while opening. If while closing, the movement stops.
SAFE 6	**Configuration of safety input SAFE 6. 84**	6	11	Input configured as Bar OP 8k2, safety edge with inversion active only while opening. If while closing, the movement stops. **(Inactive on SAFE 3,4,5,6).**
			12	Input configured as Bar CL, safety edge with inversion active only while closing. If while opening, the movement stops.
			13	Input configured as Bar CL TEST, safety edge tested with inversion active only while closing. If while opening, the movement stops.
			14	Input configured as Bar CL 8k2, safety edge with inversion active only while closing. If while opening, the movement stops. **(Inactive on SAFE 3,4,5,6).**
Ic 1	**Configuration of command input IC 1. 61**	0	0	Input configured as Start E.
			1	Input configured as Start I.
Ic 2	**Configuration of command input IC 2. 62**	4	2	Input configured as Open.
			3	Input configured as Close.
Ic 3	**Configuration of command input IC 3. 64**	2	4	Input configured as Ped.
			5	Input configured as Timer.
Ic 4	**Configuration of command input IC 4. 65**	3	6	Input configured as Timer Pedestrian.
1ch	**Configuration of the 1st radio channel command**	0	0	Radio control configured as START E.
			1	Radio control configured as Start I.
			2	Radio control configured as Open.
2ch	**Configuration of the 2nd radio channel command**	9	3	Radio control configured as Close
			4	Radio control configured as Ped
			5	Radio control configured as STOP
			6	Radio control configured as AUX0 **
3 ch	**Configuration of the 3rd radio channel command**	2	7	Radio control configured as AUX1 **
			8	Radio control configured as AUX2 **
			9	Radio control configured as AUX3 **
4 ch	**Configuration of the 4th radio channel command**	5	10	Radio control configured as EXPO1 **
			11	Radio control configured as EXPO2 **
AUX 0	**Configuration of AUX 0 output. 20-21**	6	0	Output configured as monostable Radio Channel.
			1	Output configured as SCA (gate open light).
			2	Output configured as Courtesy Light command.
AUX 1	**Configuration of AUX 1 output. 22-23**	3	3	Output configured as Zone Light command.
			4	Output configured as Stair Light
			5	Output configured as Alarm
AUX 2	**Configuration of AUX 2 output. 24-25**	1	6	Output configured as Flashing light
			7	Output configured as Latch
			8	Output configured as Magnetic lock
AUX 3	**Configuration of AUX 3 output. 26-37**	0	9	Output configured as Maintenance
			10	Output configured as Flashing Light and Maintenance.
			11	Not used
			12	Not used
			13	Output configured as Gate Status
			14	Output configured as Bistable Radio Channel
			15	Output configured as timed Radio Channel
LocK	**Type of lock. 28-29**	0	0	Output configured as 12V⎓ solenoid latch.
			1	Output configured as 12V⎓ magnetic lock.
FIXEd codE	**Fixed code**	0	0	Receiver is configured for operation in rolling-code mode. Fixed-Code Clones are not accepted.
			1	Receiver is configured for operation in fixed-code mode. Fixed-Code Clones are accepted.

Logic	Definition	Default	Cross out setting used	Optional extras
ProtEct Ion LEvEL	**Setting the protection level**	0	0	A - The password is not required to access the programming menus B - Enables wireless memorizing of transmitters. Operations in this mode are carried out near the control panel and do not require access: - Press in sequence the hidden key and normal key (T1-T2-T3-T4) of a transmitter that has already been memorized in standard mode via the radio menu. - Press within 10 sec. the hidden key and normal key (T1-T2-T3-T4) of a transmitter to be memorized. The receiver exits programming mode after 10 sec.: you can use this time to enter other new transmitters by repeating the previous step. C - Enables wireless automatic addition of clones. Enables clones generated with the universal programmer and programmed Replays to be added to the receiver's memory. D - Enables wireless automatic addition of replays. Enables programmed Replays to be added to the receiver's memory. E - The board's parameters can be edited via the U-link network
			1	A - You are prompted to enter the password to access the programming menus The default password is 1234. No change in behaviour of functions B - C - D - E from 0 logic setting
			2	A - You are prompted to enter the password to access the programming menus The default password is 1234. B - Wireless memorizing of transmitters is disabled. C - Wireless automatic addition of clones is disabled. No change in behaviour of functions D - E from 0 logic setting
			3	A - You are prompted to enter the password to access the programming menus The default password is 1234. B - Wireless memorizing of transmitters is disabled. D - Wireless automatic addition of Replays is disabled. No change in behaviour of functions C - E from 0 logic setting
			4	A - You are prompted to enter the password to access the programming menus The default password is 1234. B - Wireless memorizing of transmitters is disabled. C - Wireless automatic addition of clones is disabled. D - Wireless automatic addition of Replays is disabled. E - The option of editing the board's parameters via the U-link network is disabled. Transmitters are memorized only using the relevant Radio menu. IMPORTANT: This high level of security stops unwanted clones from gaining access and also stops radio interference, if any.
SEr IAL ModE	**Serial mode** (Identifies how board is configured in a BFT network connection).	0	0	Standard SLAVE: board receives and communicates commands/diagnostics/etc.
			1	Standard MASTER: board sends activation commands (START, OPEN, CLOSE, PED, STOP) to other boards.
AddrESS	**Address**	0	[____]	Identifies board address from 0 to119 in a local BFT network connection. (see U-LINK OPTIONAL MODULES section)
chrono	**Time bands**	0	0	Logic not enabled
			1	Activates the time bands configured as timer
			2	Activates the time bands configured as pedestrian timer
EXPI1	**Configuration of EXPI1 input on input-output expansion board. 1-2**	1	0	Input configured as Start E command.
			1	Input configured as Start I command.
			2	Input configured as Open command.
			3	Input configured as Close command.
			4	Input configured as Ped command.
			5	Input configured as Timer command.
			6	Input configured as Timer Pedestrian command.
			7	Input configured as Phot (photocell) safety.
			8	Input configured as Phot op safety (photocell active during opening only).
			9	Input configured as Phot cl safety (photocell active during closing only).
			10	Input configured as Bar safety (safety edge).
			11	Input configured as safety Bar OP, safety edge with inversion active only while opening, if while closing the movement stops.
			12	Input configured as safety Bar CL, safety edge with inversion active only while closing, if while opening the movement stops.
			13	Input configured as Phot test safety, tested photocell. Input 3 (EXPI2) on input/output expansion board is switched automatically to safety device test input, EXPFAULT1.
			14	Input configured as Phot op test safety, tested photocell active only while opening. Input 3 (EXPI2) on input/output expansion board is switched automatically to safety device test input, EXPFAULT1
			15	Input configured as Phot cl test safety, tested photocell active only while closing. Input 3 (EXPI2) on input/output expansion board is switched automatically to safety device test input, EXPFAULT1
			16	Input configured as Bar safety, tested safety edge. Input 3 (EXPI2) on input/output expansion board is switched automatically to safety device test input, EXPFAULT1.
			17	Input configured as safety Bar OP test, safety edge with inversion active only while opening, if while closing the movement stops. Input 3 (EXPI2) on input/output expansion board is switched automatically to safety device test input, EXPFAULT1.
			18	Input configured as safety Bar CL test, safety edge with inversion active only while closing, if while opening the movement stops. Input 3 (EXPI2) on input/output expansion board is switched automatically to safety device test input, EXPFAULT1.

Logic	Definition	Default	Cross out setting used	Optional extras
EHP 12	**Configuration of EXPI2 input on input-output expansion board. 1-3**	0	0	Input configured as Start E command.
			1	Input configured as Start I command.
			2	Input configured as Open command.
			3	Input configured as Close command.
			4	Input configured as Ped command.
			5	Input configured as Timer command.
			6	Input configured as Timer Pedestrian command.
			7	Input configured as Phot (photocell) safety.
			8	Input configured as Phot op safety (photocell active during opening only).
			9	Input configured as Phot cl safety (photocell active during closing only).
			10	Input configured as Bar safety (safety edge).
			11	Input configured as safety Bar OP, safety edge with inversion active only while opening, if while closing the movement stops.
			12	Input configured as safety Bar CL, safety edge with inversion active only while closing, if while opening the movement stops.
EHPo 1	**Configuration of EXPO2 output on input-output expansion board 4-5**	11	0	Output configured as monostable Radio Channel.
			1	Output configured as SCA (gate open light).
			2	Output configured as Courtesy Light command.
			3	Output configured as Zone Light command.
			4	Output configured as Stair Light.
			5	Output configured as Alarm.
EHPo2	**Configuration of EXPO2 output on input-output expansion board 6-7**	11	6	Output configured as Flashing light.
			7	Output configured as Latch.
			8	Output configured as Magnetic lock.
			9	Output configured as Maintenance.
			10	Output configured as Flashing Light and Maintenance.
			11	Output configured as Traffic Light control with TLB board.
			12	Not used
			13	Output configured as Gate Status
			14	Output configured as Bistable Radio Channel
			15	Output configured as timed Radio Channel
trAFF Ic L IGht PrEFLASh InG	**Traffic light pre-flashing**	0	0	Pre-flashing switched off.
			1	Red lights flash, for 3 seconds, at start of operation.
trAFF Ic L IGht rEd LAMP ALWAYS on	**Steadily lit red light**	0	0	Red lights off when gate closed.
			1	Red lights on when gate closed.

*** Only active on FW > 1.12**

Radio channel control configuration
CH logic= 0 - Control configured as Start E. Operation according to StEP-bY-StEP Mou. logic. External start for traffic light control.
CH logic= 1 - Control configured as Start I. Operation according to StEP-bY-StEP Mou. logic. Internal start for traffic light control.
CH logic= 2 - Control configured as Open. The command causes the leaves to open.
CH logic= 3 - Control configured as Closed. The command causes the leaves to close.
CH logic= 4 - Control configured as Ped. The command causes the leaf to open to the pedestrian (partial) opening position. Operation according to StEP-bY-StEP. logic
Logica CH= 5- Control configured as STOP. The command performs a STOP
CH logic= 6 - Control configured as AUX0. (**) The control activates the AUX0 output
CH logic= 7 - Control configured as AUX1. (**) The control activates the AUX1 output
CH logic= 8 -Control configured as AUX2. (**) The control activates the AUX2 output
CH logic= 9 - Control configured as AUX3. (**) The control activates the AUX3 output
CH logic= 10 - Control configured as EXPO1. (**) The control activates the EXPO1 output
CH logic= 11 - Control configured as EXPO2. (**) The control activates the EXPO2 output

(**) Active only if the output is configured as Monostable Radio Channel, Courtesy Light, Zone Light, Stair Light, Bistable Radio Channel or Timed Radio Channel.

TABLE "C" – RADIO MENU (rAd Io)

Logic	Description
Add 1ch	**Add 1ch Key** associates the desired key with the 1nd radio channel command.
Add 2ch	**Add 2ch Key** associates the desired key with the 2nd radio channel command.
Add 3ch	**Add 3ch Key** associates the desired key with the 3nd radio channel command.
Add 4ch	**Add 4ch Key** associates the desired key with the 4nd radio channel command.
ErASE 64	**Erase List** ⚠ **WARNING!** Erases all memorized transmitters from the receiver's memory.
ErASE 1	**Eliminates individual radio control** Removes a radio control (if clone or replay is disabled) To select the radio control to be deleted, enter the position or press a button on the radio control to be deleted (the position is displayed)
cod rX	**Read receiver code** Displays receiver code required for cloning transmitters.

Bft Spa
Via Lago di Vico, 44 ITALY
36015 Schio (VI)
T +39 0445 69 65 11
F +39 0445 69 65 22
→www.bft-automation.com

SPAIN
BFT GROUP ITALIBERICA DE AUTOMATISMOS S.L.
08401 Granollers - (Barcelona)
www.bftautomatismos.com

FRANCE
AUTOMATISMES BFT FRANCE
69800 Saint Priest
www.bft-france.com

GERMANY
BFT TORANTRIEBSSYSTEME Gmb H
90522 Oberasbach
www.bft-torantriebe.de

UNITED KINGDOM
BFT AUTOMATION UK LTD
Heaton Mersey,Stockport SK4 3GL
www.bft.co.uk

IRELAND
BFT AUTOMATION LTD
Dublin 12

BENELUX
BFT BENELUX SA
1400 Nivelles
www.bftbenelux.be

POLAND
BFT POLSKA SP.ZO.O.
Marecka 49, 05-220 Zielonka
www.bft.pl

CROATIA
BFT ADRIA D.O.O.
51218 Drazice (Rijeka)
www.bft.hr

PORTUGAL
BFT SA-COMERCIO DE AUTOMATISMOS E MATERIAL DE SEGURANCIA
3026-901 Coimbra
www.bftportugal.com

CZECH REPUBLIC
BFT CZ S.R.O.
Praha
www.bft.it

TURKEY
BFT OTOMATIK KAPI SISTEMELERI SANAY VE
Istanbul
www.bftotomasyon.com.tr

RUSSIA
BFT RUSSIA
111020 Moscow
www.bftrus.ru

AUSTRALIA
BFT AUTOMATION AUSTRALIA PTY LTD
Wetherill Park (Sydney)
www.bftaustralia.com.au

U.S.A.
BFT USA
Boca Raton
www.bft-usa.com

CHINA
BFT CHINA
Shanghai 200072
www.bft-china.cn

UAE
BFT Middle East FZCO
Dubai