INDEX

1. COMPONENTS pag.7
3. DIMENSIONS pag.7
2. TECHNICAL SPECIFICATIONS pag.7
4. ELECTRICAL CONNECTIONS pag.8
5. INSTALLATION pag.8
5.1. PRELIMINARY CHECKS pag.8
5.2 INSTALLATION DIMENSIONS pag.8
5.3. INSTALLING THE OPERATOR pag.8
5.4. WIRING THE OPERATOR pag.9
5.5. POSITIONING THE MECHANICAL STOPS pag.10
6. AUTOMATED SYSTEM TEST pag.10
7. MANUAL MODE OPERATION pag.10
8. SPECIAL APPLICATIONS pag.10
9. MAINTENANCE pag.10
10. REPAIRS pag.10
11. ACCESSORIES pag.10

ENGLISH

CE DECLARATION OF CONFORMITY FOR MACHINES (DIRECTIVE 98/37/EC)

Manufacturer: FAAC S.p.A.

Address: Via Benini, 1 - 40069 - Zola Predosa - BOLOGNA - ITALY

Declares that: Operator mod. **391 - 391 E** powered on 230Vac

- is built to be integrated into a machine or to be assembled with other machinery to create a machine under the provisions of Directive 98/37/EC;
- conforms to the essential safety requirements of the following EEC directives:
  2006/95/EC Low Voltage directive.
  2004/108/EC Electromagnetic Compatibility directive.

and also declares that it is prohibited to put into service the machinery until the machine in which it will be integrated or of which it will become a component has been identified and declared as conforming to the conditions of Directive 89/392/EEC and subsequent modifications assimilated in Italian National legislation under Presidential decree No.459 of 24 July 1996.

Bologna, 23-01-2008

The Managing Director
A. Bassi

391 AUTOMATED SYSTEM

The **391** automated system consists of a non-reversing electro-mechanical operator available in two versions:

- **391 E** with built-in control unit
- **391** without control unit

The operator was designed for automating the opening of gates with one or two leaves, with maximum length of 2.5m.
A handy, safe releases system, with personalised key, moves the leaf in case of a power cut or fault.
The two articulated arms are designed for moving gates with very large pilasters. The distance between the hinge and the gearmotor securing point can be up to 220 mm. Thanks to the special geometry of the two arms, all possible shearing points have been eliminated.

- **Correct operation and the specifications declared in these instructions can be obtained only with FAAC accessories and safety devices.**
- **To make an installation conforming to current safety regulations, the absence of a mechanical anti-crushing clutch, means that a control unit with an adjustable electronic clutch device is necessary.**
- **The 391 automated system was designed and built for controlling vehicle access - do not use for any other purpose.**

2. TECHNICAL SPECIFICATIONS

MODEL	391 E	391
Power supply	230 V~	-
Electric motor	24 Vdc	24 Vdc
Absorbed power	120 W	110 W
Max torque	250 N/m	250 N/m
Max angular speed	13 °/sec	13 °/sec
Max leaf [1-2]	2.5 m	2.5 m
Max leaf weight [2]	See graph	
Use frequency at 20°C	80 cycles/day	80 cycles/day
Consecutive cycles at 20°C	30	30
Mximum continuous operating time	O.T. 17 min.	
Protection Class	IP44	IP44
Operating ambient temperature	-20°C +55°C	-20°C +55°C
Noise level	<70 dB (A)	
Operator weight	8.7 Kg	7 Kg
Dimensions	See fig. 2	

[1] For leaves with a length L>2m, an electric lock must be installed to guarantee locking the leaf.
[2] The weight **P** of the leaf is a function of the length **L**. Check if your leaf is in the zone shown in the graph underneath.

ENGLISH

1. COMPONENTS

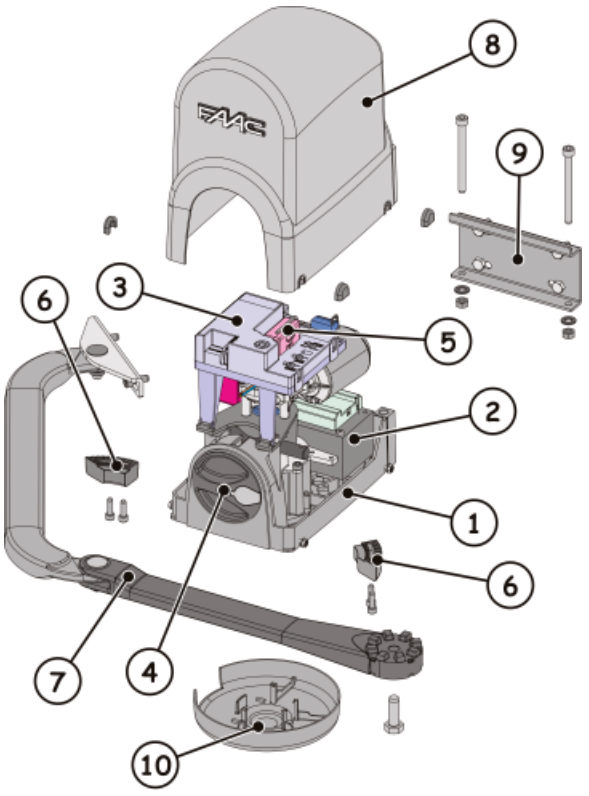

1 Gearmotor
2 Transformer
3 Control unit (for master motor only)
4 Release device
5 Receiver module (optional)
6 Mechanical stops
7 Transmission arm
8 Covering housing
9 Rear bracket
10 Lower housing

Fig. 1

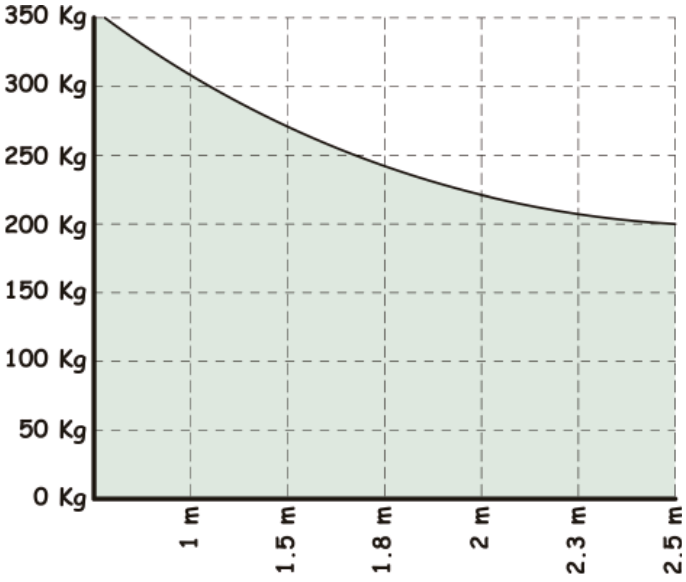

3. DIMENSIONS

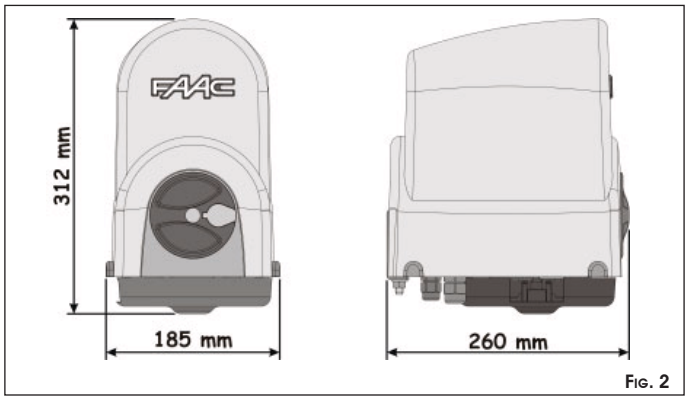

Fig. 2

4. ELECTRICAL CONNECTIONS

- The lay-out below refers to an installation with two motors, with all safety and signalling devices connected.
- For two-motor applications, use a cable, type **H05RN-F** to connect the MASTER and SLAVE operators.

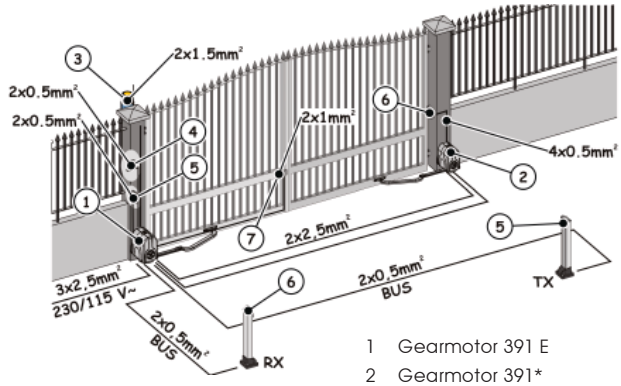

1 Gearmotor 391 E
2 Gearmotor 391*
3 Flashing lamp
4 Key-operated selector switch
5 Photocell transmitter
6 Photocell receiver
7 Electric lock **

* (only for two leaf applications)
** (obligatory for leaf L>2m)

Fig. 3

5. INSTALLATION

5.1. PRELIMINARY CHECKS

To ensure a correctly operating automated system, the structure of the gate to be moved must satisfy the following requirements:

- The mechanical construction elements must comply with the provisions of the EN12604 and EN 12605 standards.
- leaf length must conform to the operator characteristics (see paragraph 2)
- sturdy, rigid gate structure, suitable for the automated system
- smooth, uniform gate movement, without any friction and jamming during the entire opening;
- adequately sturdy hinges, in good condition
- an efficient earth socket for connection of the operator

- We advise you to carry out the metalwork jobs if any, before installing the automated system.

- **The condition of the gate structure directly influences the reliability and safety of the automated system.**
- **If the leaf to be motorised incorporates a door for the pedestrian passage it is compulsory to add a safety switch on the door, connected to the stop input, in order to inhibit the operation of the automated system when the door is open.**
- **The gearmotor cannot be used to move safety exits or gates fitted on emergency routes (escape routes).**

5.2 INSTALLATION DIMENSIONS

Procedure for finding the securing position of the operator, using Fig.4 to help you:

- measure dimension "**A**" of the gate and trace a horizontal line on the graph on the measured value, this line to cross the whole graph.
- you will obtain the maximum permissible angular opening according to dimension "**A**" of the graph.
- select the opening range you require
- select dimension "**B**" so that it intersects the horizontal line (dimension "**A**") inside the required opening range.

- **If dimension "A" permits opening values greater than the opening value selected, the value of dimension "B" can change up to the maximum permissible opening value.**
- **Make sure that the minimum dimension of 450mm in Fig.4 is observed.**
- **When the operator has been installed, check if dimension "X" in Fig.4 is minimum 500 mm. If dimension "X" is less than 500mm, run an impact test on the point indicated in Fig.4, as described in UNI EN12445 standard, and make sure that the measured values conform to the specifications of UNI EN 12453 standard.**
- **If the thrust values are not within the values specified in UNI EN12453 standard, the zone indicated in figure 4 MUST be protected with a protective device conforming to the UNI EN12978 standard.**

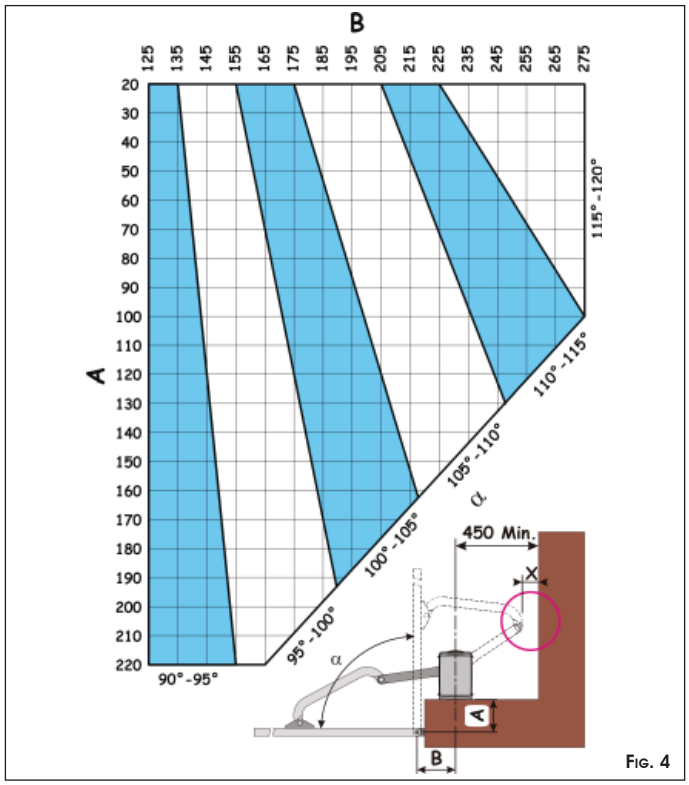

Fig. 4

- The operator was studied and made to be secured vertically (Fig.5). The operator cannot be installed in other positions.

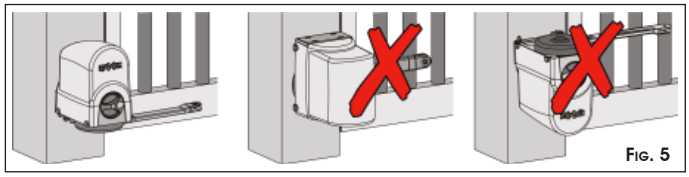

Fig. 5

5.3. INSTALLING THE OPERATOR

When you have established dimensions "**A**" and "**B**", you can install the operator as follows:

① Loosen by about 1/2 turn the four securing screws of the upper housing (Fig.6 ref.①) and withdraw the housing. Set the operator for manual operation, see paragraph 7.

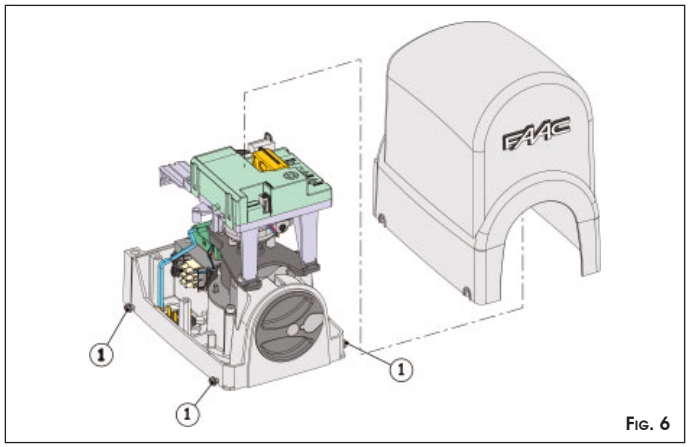

Fig. 6

② Establish the height of the operator, bearing in mind that:
- the securing bracket of the curved arm must be in a zone where it can be secured to the gate leaf (Fig.7)
- the minimum off ground height of the operator must permit securing the curved arm and positioning the lower housing (at least 85mm, see fig.7).

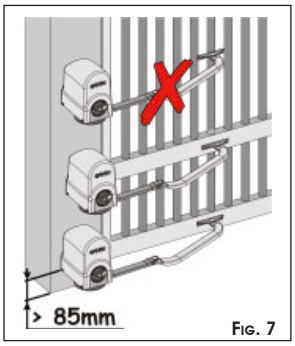

Fig. 7

- the lower edge of the rear bracket must be aligned with respect to the upper edge of the front bracket (Fig.8).

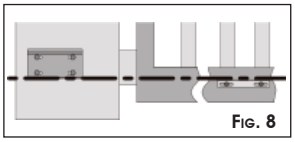
Fig. 8

③ Secure the rear bracket in the position you had established, using four M8 screws. As you secure the bracket, respect the lay-out in Fig. 9 and check, using a level, if the bracket is horizontal.

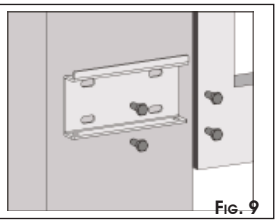
Fig. 9

- **To improve water tightness, the external housing covers the securing bracket - this prevents the bracket from being directly welded on the pilaster.**
- **The rear bracket must be secured on an as smooth as possible surface. For masonry pilasters, a counter-plate for walling is available as an accessory.**

④ Position the operator on the bracket you have just secured, using two M8x100 screws and the relevant nuts - supplied (Fig.10).
⑤ Set the operator for manual operation, see paragraph 7.

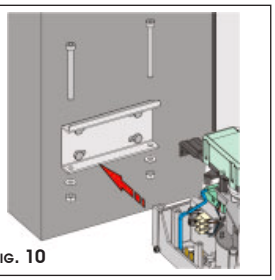
Fig. 10

⑥ Install the straight arm (Fig.11) with the supplied screw.

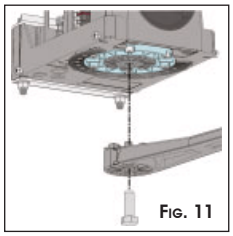
Fig. 11

⑦ Assemble the rest of the arm as illustrated in Fig.12.

For correct operation, tighten the two securing screws (Fig.12 ref.①) and then loosen them by about 1/2 turn to enable rotation without any friction on the arms.

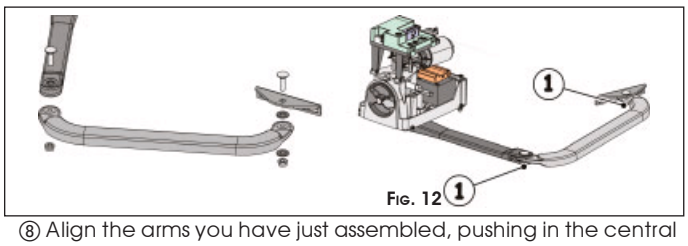

Fig. 12

⑧ Align the arms you have just assembled, pushing in the central zone until they stop, see Fig. 13 ref. ①.

There are two stops on the curved arm to facilitate the aligning operation.

⑨ Rest the front bracket on the leaf, Fig.13 ref. ②.
⑩ Move back the front bracket by about 20 mm and mark the securing holes, Fig. 13 ref. ③.

⑪ Secure the bracket in the established position using two M8 screws.

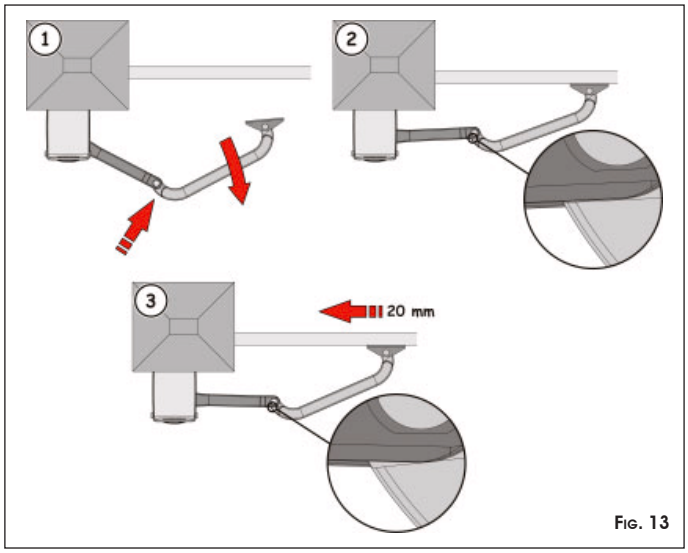

Fig. 13

We advise you to secure the bracket with the screws, and not weld it to the leaf, in order not to rule out future adjustments.

⑫ Move the bracket by hand and - with the leaf in closing position - make sure that the two arms do not impact each other, as shown in Fig. 13 ref. ②.
⑬ Take the operator back to the work position - see paragraph 7.

5.4. WIRING THE OPERATOR

When you have finished securing the operator, you can wire it. There are three holes in the lower part of the operator. They should be used for positioning the cable grippers, for routing the power cables, for connecting accessories and, if necessary, for connecting the second motor.

① Install all the three supplied cable grippers with the securing nuts (Fig. 14).

- Always use the largest cable gripper (Fig.14 ref.①)
- If the other two cable grippers are not used, they must be closed, using the supplied plugs (Fig.14 ref.②). Fit the plastic plug in the cable routing hole and close the cable gripper until it is tight.

② Connect the power cable, as shown in Fig.15. The earthing wire must also be connected. Make sure that the power cable wires are correctly fitted in the 'comb' which restrains them Fig. 15.

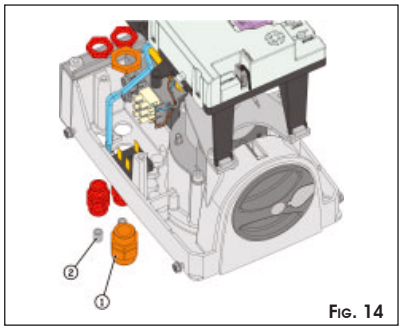

Fig. 14

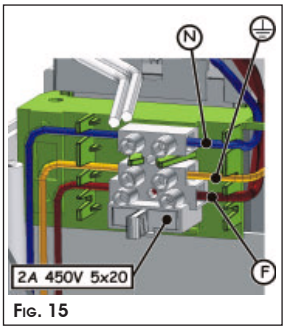

Fig. 15

- **If the protective fuse has to be replaced, use a fuse with the following characteristics:**
  5x20 2A 450V

③ Wire all the accessories and safety devices, observing the relevant instructions.

ENGLISH

ENGLISH

5.5. POSITIONING THE MECHANICAL STOPS

The 391 operator is supplied standard with opening and closing mechanical stops. This is to facilitate the installation operations because there is no need to construct the mechanical stop elements. The mechanical stops should be fitted in the lower part of the operator, coupled to a toothed sector. Installation procedure for the stops:

OPENING MECHANICAL STOP

① Set the operator for manual operation, see paragraph 7.
② Manually move the leaf to its opening position.
③ Take the mechanical stop as close as possible to the straight arm and fasten the two securing screws.

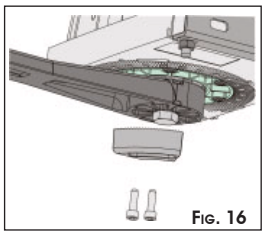
FIG. 16

⚠ • **Make sure that the toothed sector is coupled correctly.**

CLOSING MECHANICAL STOP

⚠ • **Use the closing mechanical stop only in the absence of a mechanical stop on the closing leaf.**
• **The closing mechanical stop does not guarantee locking the leaf in case of burglary.**

① Set the operator for manual operation, see paragraph 7.
② Manually move the leaf to its closed position.
③ Take the mechanical stop as close as possible to the straight arm and fasten the two securing screws.

⚠ • **Make sure that the toothed sector is coupled correctly.**

6. AUTOMATED SYSTEM TEST

- When you have made all the necessary electrical connections, power up the system and program the control unit according to your requirements.
- Run the test for the automation and for all the connected accessories, taking great care when checking the safety devices.
- Re-locate the upper covering housing, tighten the securing screws and position the four covering plugs fig.17 ref. ①.
- Position the lower housing as shown in fig.17 ref. ②.
- Hand the "User's Guide" booklet to the customer and describe its correct operation and use.

⚠ • **Point out, to the end user, any residual risks present in the installation.**

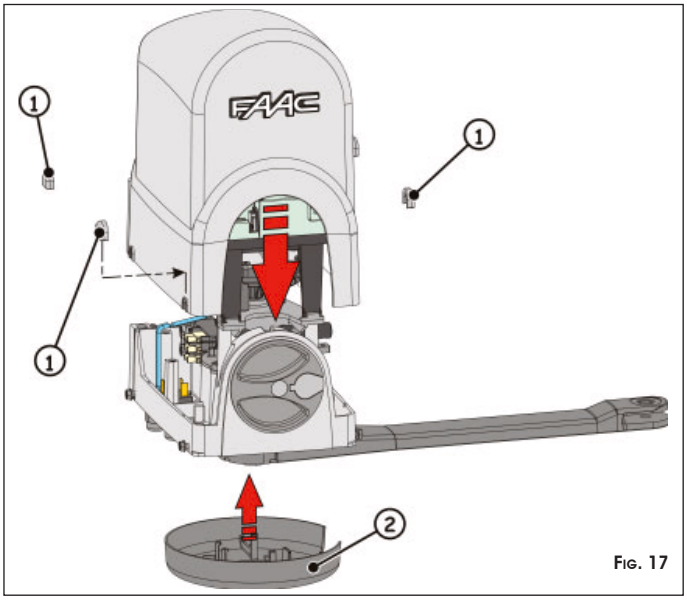

FIG. 17

7. MANUAL MODE OPERATION

If the operator has to be manually activated due to a power cut or to an operator fault, proceed as follows:

① Cut power to the system with the differential switch.
② Lift the protective plug from the lock, fig.18 ref. ①
③ Fit the key and turn it anti-clockwise until it stops, fig.18 ref. ②.
④ Turn the release knob clockwise until it stops, fig.18 ref. ③.
⑤ Move the leaf by hand.

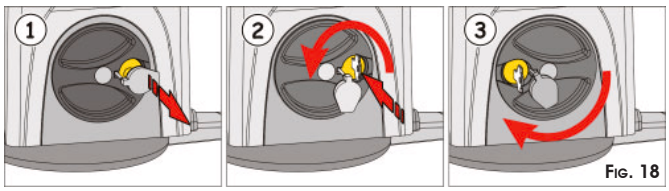

FIG. 18

Procedure for restoring normal operation:

① Make sure that the system is not powered.
② Position the leaf to its closing position.
③ Turn the release knob anti-clockwise until it stops, then turn the key clockwise until it stops and remove it.
④ Check if the release device has been correctly engaged, by trying to move the leaf by hand. The leaf must be locked and it must not be possible to move it by hand.
⑤ Re-position the lock covering plug.
⑥ Restore power to the system and command an opening cycle.

• The operator may not correctly execute the decelerations on the first cycle. Wait for the end of the cycle and give another opening command.

8. SPECIAL APPLICATIONS

Applications other than those in this manual are EXPRESSLY PROHIBITED

9. MAINTENANCE

To ensure correct long-term operation and a constant level of safety, we advise you to generally control the system every 6 months. In the "User's Guide" booklet, there is a form for recording jobs.

10. REPAIRS

The User must not in any way attempt to repair or to take direct action and must solely contact qualified FAAC personnel or FAAC service centres.

11. ACCESSORIES

For accessories, see the FAAC catalogue.