S800H

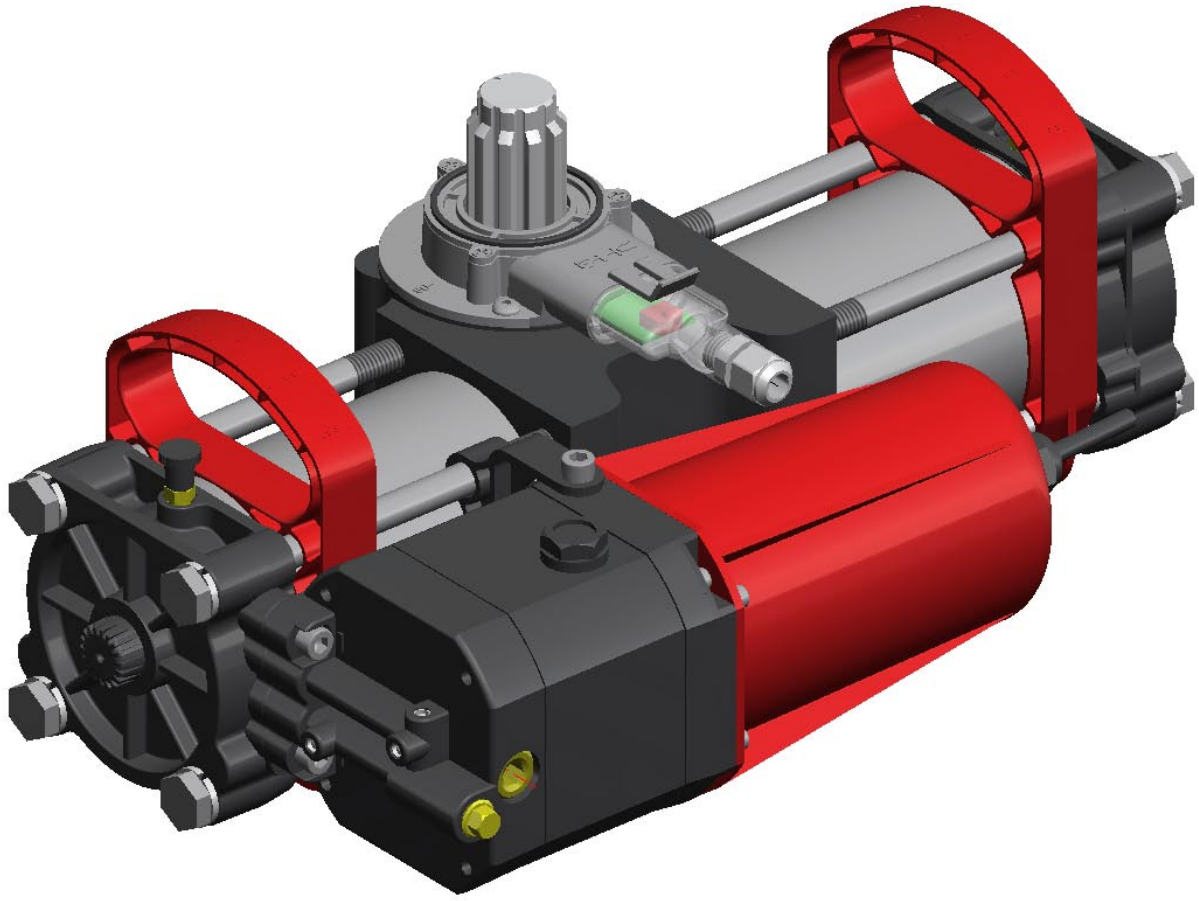

CASSETTA PORTANTE-BEARING CASE-CASSON PORTANT TRAGEGEHÄUSE-CAJA PORTANTE- BEHUIZING

Quote in mm - Dimensions in mm - Cotes en mm - Maße in mm - Cotas en mm - Waarden in mm

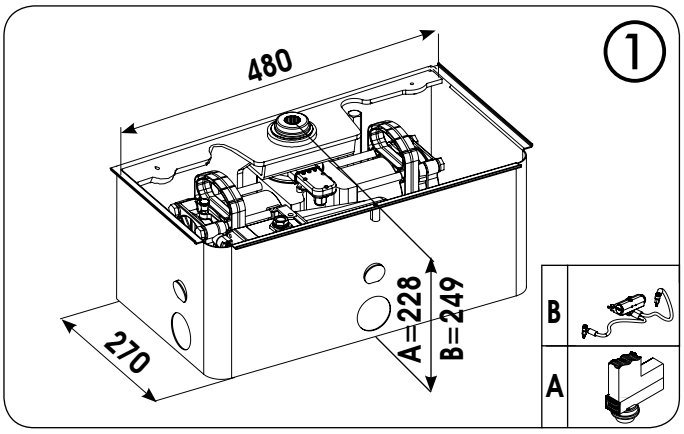

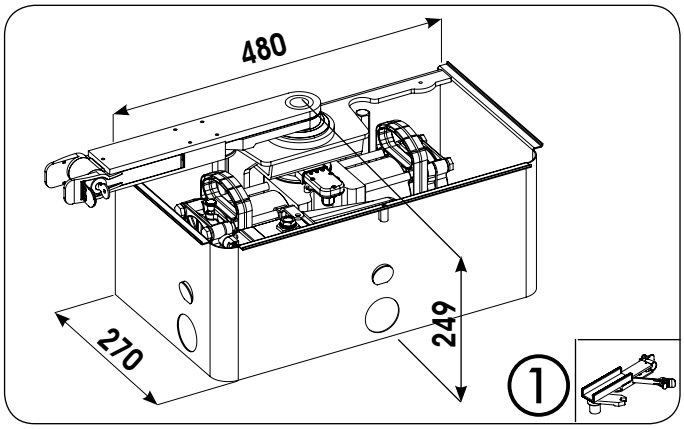

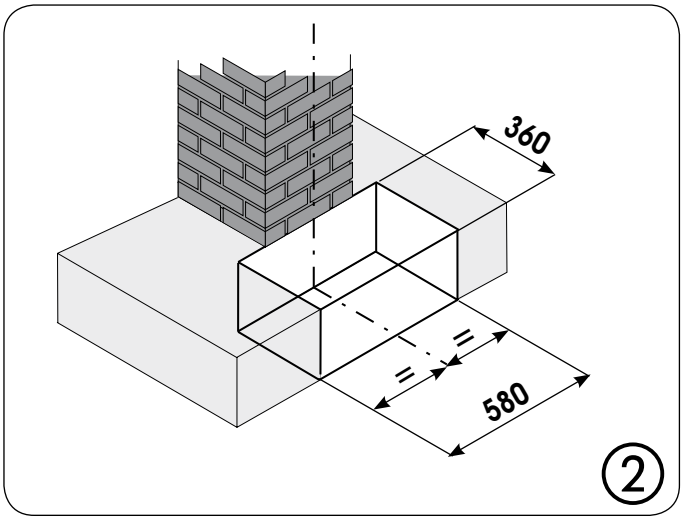

A (mm)		
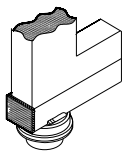	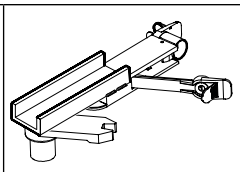	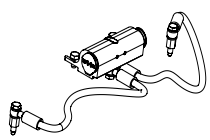
26	47	

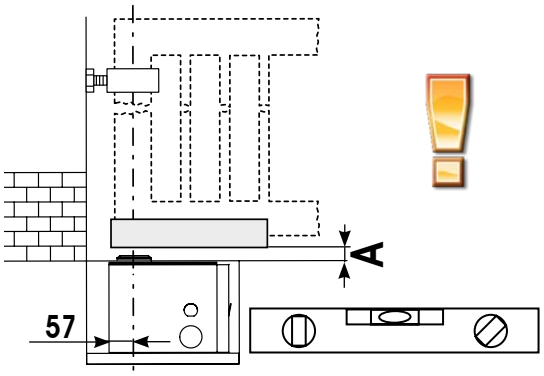

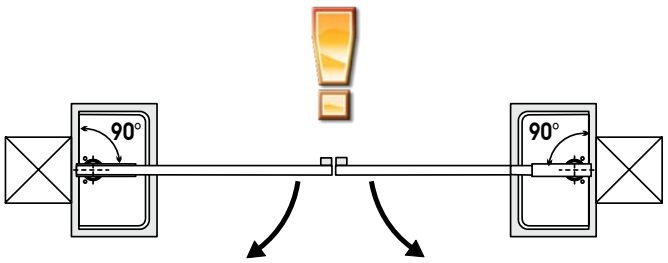

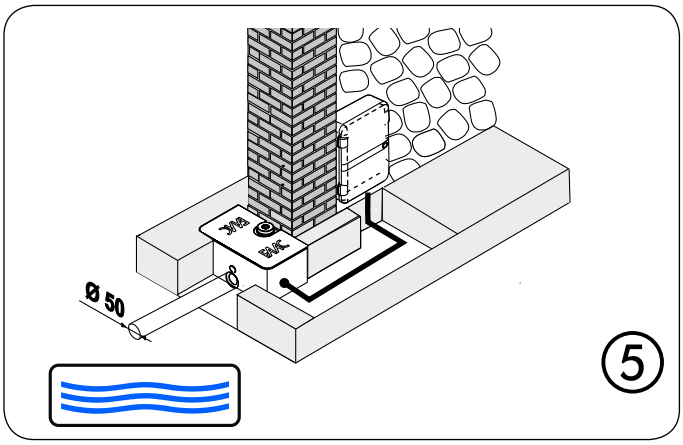

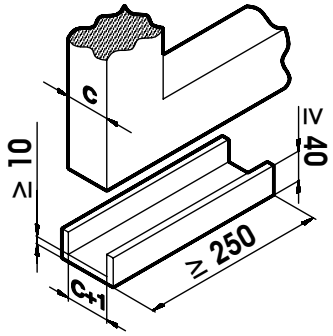

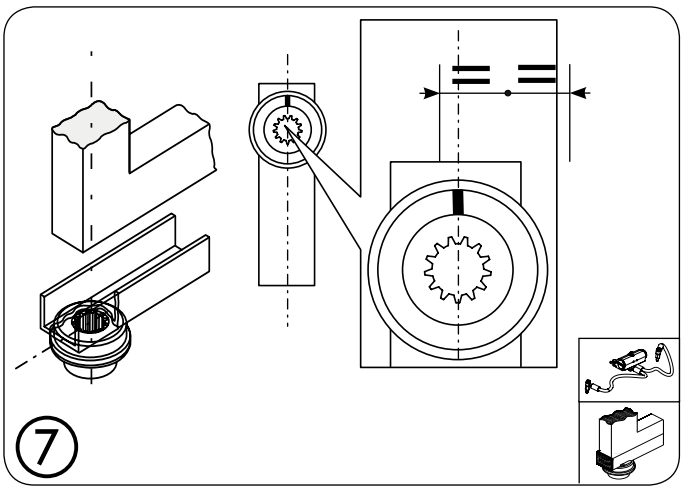

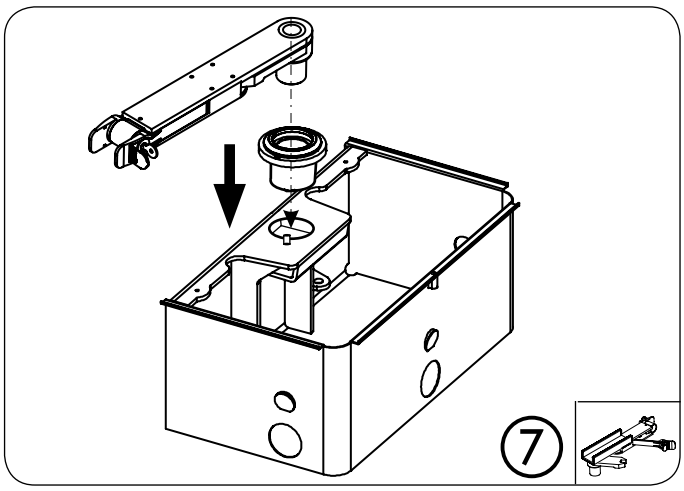

⚠ *PER GARANTIRE UNA CORRETTA INSTALLAZIONE OCCORRE CHE L'ASSE DI ROTAZIONE DELL'ANTA, SIA PERFETTAMENTE ALLINEATO CON L'OPERATORE (Fig. 7)*

TO ENSURE CORRECT INSTALLATION, THE LEAF ROTATION AXIS MUST BE PERFECTLY ALIGNED WITH THE OPERATOR (Fig. 7)

POUR GARANTIR UNE INSTALLATION CORRECTE, L'AXE DE ROTATION DU VANTAIL DOIT ÊTRE PARFAITEMENT ALIGNÉ SUR L'OPÉRATEUR (Fig. 7)

ZUR GEWÄHRLEISTUNG EINER SACHGEMÄSSEN MONTAGE MUSS DIE DREHACHSE DES FLÜGELS PERFEKT ZUM ANTRIEB GEFLUCHTET SEIN (Abb. 7)

PARA GARANTIZAR UNA CORRECTA INSTALACIÓN ES NECESARIO QUE EL EJE DE ROTACIÓN DE LA HOJA ESTÉ PERFECTAMENTE ALINEADO CON EL OPERADOR (Fig. 7)

OM EEN CORRECTE INSTALLATIE TE GARANDEREN MOET DE ROTATIE-AS VAN DE VLEUGEL PERFECT OP EEN LIJN ZIJN MET DE AANDRIJVING (Fig. 7)

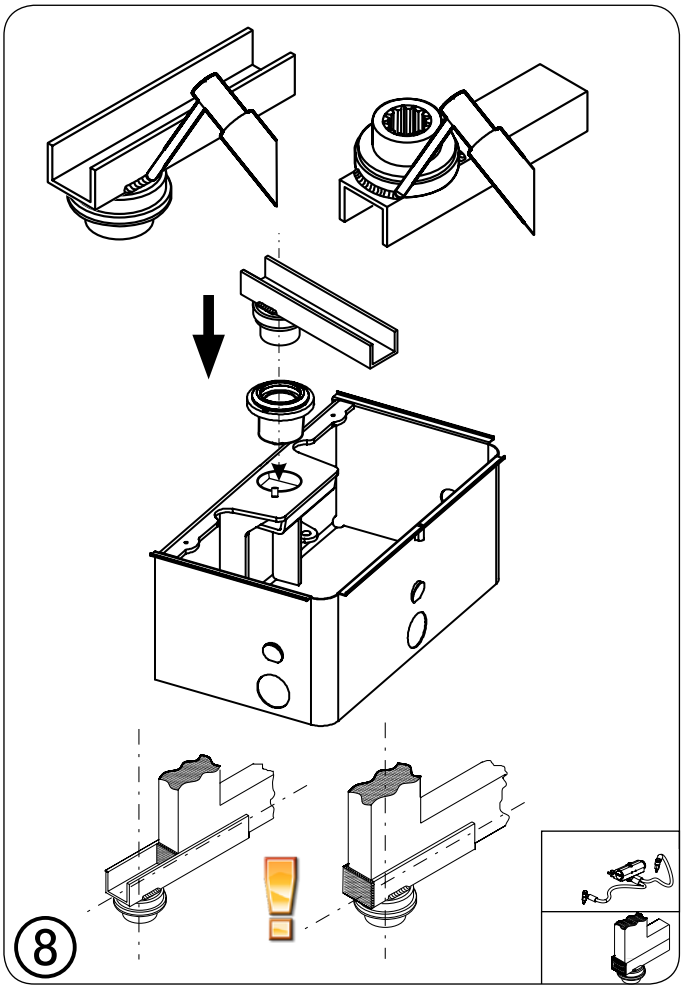

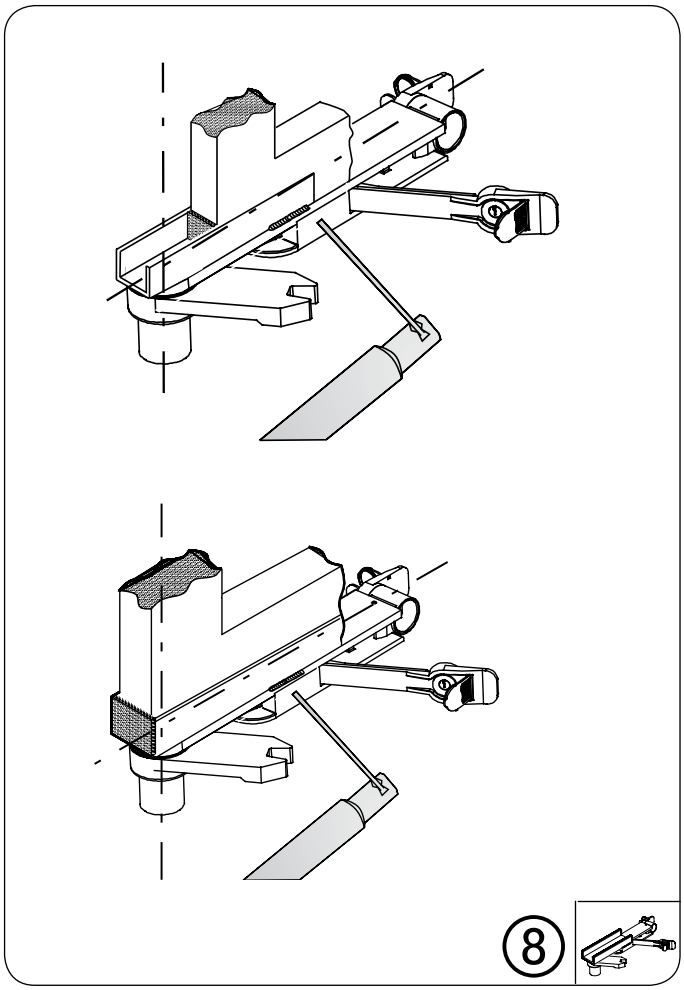

AUTOMATED SYSTEM S800H

CE DECLARATION OF CONFORMITY FOR MACHINES

(DIRECTIVE 2006/42/EC)

Manufacturer: FAAC S.p.A.

Address: Via Benini, 1 - 40069 Zola Predosa BOLOGNA - ITALY

Declares that: Operator model S800H

is built to be integrated into a machine or to be assembled with other machinery to create a machine under the provisions of Directive 2006/42/EC

conforms to the essential safety requirements of the following EEC directives

2006/95/EC Low Voltage directive
2004/108/EC Electromagnetic Compatibility directive

and also declares that it is prohibited to put into service the machinery until the machine in which it will be integrated or of which it will become a component has been identified and declared as conforming to the conditions of Directive 89/392/EEC and subsequent modifications assimilated in Italian National legislation under Presidential decree No.459 of 24 July 1996

Bologna, 01/01/2011

The Managing Director
A.Marcellan



ENGLISH

WARNINGS FOR THE INSTALLER

GENERAL SAFETY OBLIGATIONS

1) **ATTENTION! To ensure the safety of people, it is important that you read all the following instructions. Incorrect installation or incorrect use of the product could cause serious harm to people.**
2) **Carefully read and follow the instructions before beginning to install the product.**
3) Do not leave packing materials (plastic, polystyrene, etc.) within reach of children as such materials are potential sources of danger.
4) Store these instructions for future reference.
5) This product was designed and built strictly for the use indicated in this documentation. Any other use, not expressly indicated here, could compromise the good condition/operation of the product and/or be a source of danger.
6) FAAC declines all liability caused by improper use or use other than that for which the automated system was intended.
7) Do not install the equipment in an explosive atmosphere: the presence of inflammable gas or fumes is a serious danger to safety.
8) The mechanical parts must conform to the provisions of Standards EN 12604 and EN 12605.
   For non-EU countries, to obtain an adequate level of safety, the Standards mentioned above must be observed, in addition to national legal regulations.
9) FAAC is not responsible for failure to observe Good Technique in the construction of the closing elements to be motorised, or for any deformation that may occur during use.
10) The installation must conform to Standards EN 12453 and EN 12445.
    For non-EU countries, to obtain an adequate level of safety, the Standards mentioned above must be observed, in addition to national legal regulations.
11) Before attempting any job on the system, cut out electrical power .
12) The mains power supply of the automated system must be fitted with an all-pole switch with contact opening distance of 3mm or greater. Use of a 6A thermal breaker with all-pole circuit break is recommended.
13) Make sure that a differential switch with threshold of 0.03 A is fitted upstream of the system.
14) Make sure that the earthing system is perfectly constructed, and connect metal parts of the means of the closure to it.
15) The automated system is supplied with an intrinsic anti-crushing safety device consisting of a torque control. Nevertheless, its tripping threshold must be checked as specified in the Standards indicated at point 10.
16) The safety devices (EN 12978 standard) protect any danger areas against **mechanical movement Risks**, such as crushing, dragging, and shearing.
17) Use of at least one indicator-light (e.g. FAACLIGHT) is recommended for every system, as well as a warning sign adequately secured to the frame structure, in addition to the devices mentioned at point "16".
18) FAAC declines all liability as concerns safety and efficient operation of the automated system, if system components not produced by FAAC are used.
19) For maintenance, strictly use original parts by FAAC.
20) Do not in any way modify the components of the automated system.
21) The installer shall supply all information concerning manual operation of the system in case of an emergency, and shall hand over to the user the warnings handbook supplied with the product.
22) Do not allow children, things or adults to stay near the product while it is operating.
23) Keep remote controls or other pulse generators away from children, to prevent the automated system from being activated involuntarily.
24) Transit is permitted only when the automated system is idle.
25) The user must not attempt any kind of repair or direct action whatever and contact qualified personnel only.
26) Maintenance: check at least every 6 months the efficiency of the system, particularly the efficiency of the safety devices (including, where foreseen, the operator thrust force) and of the release devices.
27) **The S800H automated system automates vehicle entrances - pedestrians must have a separate entrance**.
28) Power up the automated system only when expressly indicated.
29) **Anything not expressly specified in these instructions is not permitted.**

1 DESCRIPTION

These instructions apply to the following models:
S800H SB/SBW - S800H CBAC / 100° - 180°.
FAAC S800H is an automated system in a hydraulic enbloc (CLASS III), permitting vehicle access through swing leaf gates which, when installed invisibly in the ground, does not alter the appearance of the gate. The model with a hydraulic shut-down facility does not require installation of an electrical lock, as it guarantees mechanical shut-down of the leaf up to 2 m when the motor is not operating. The model without a hydraulic shut-down facility always requires one or more electrical locks to ensure the leaf is mechanically shut down. **The S800H automated systems were designed and built to automate swing leaf gates. Do not use for any other purpose.**

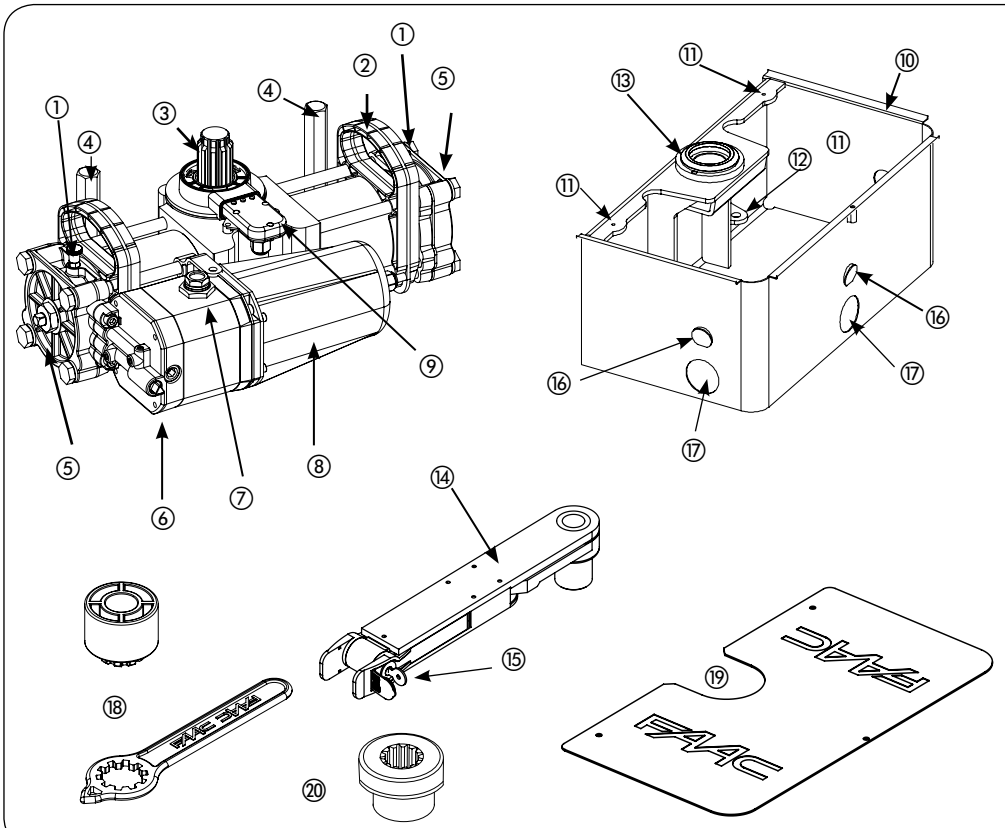

① Bleed screw
② Support handle
③ Pinion
④ Securing screws
⑤ Screw for adjusting travel-limit mechanical stops
⑥ Hydraulic release
⑦ Oil filling plug
⑧ Motor
⑨ Electronic encoder
⑩ Bearing case
⑪ Holes for securing the cover
⑫ Slots for securing the jack
⑬ Bearing bush
⑭ Gate support bracket
⑮ Key-operated release device
⑯ Wings for walling the bearing case.
⑰ Hole for power cable or drain pipe
⑱ Release and adjustment key and supporting bush
⑲ Closing cover
⑳ Grooved bush

Fig.1

2 TECHNICAL SPECIFICATIONS

TECHNICAL SPECIFICATIONS	CBAC OPERATOR	SB/SBW OPERATOR
Power supply (V dc)	24	
Absorbed power (W)	60 (*)	
Protection class	IP 67	
Type of oil	FAAC HP OIL	
Operating ambient temperature	-20° C +55°C	
Rated Operating Time (R.O.T.)	Continous duty at 55°C	
Hydraulic shut-down facility	Supplied	Not supplied
Max. torque (Nm) **	500 (E024S7) ; 600 (E124)	
Angular speed (°/sec) ***	5.5 (E024S) ; 8.2 (E124)	
Max opening angle ****	113° (S800H 100°) 187° (S800H 180°)	
Leaf max. length (m)	2	4
Leaf max. weight (Kg)	800	

* **EACH INDIVIDUAL OPERATOR**
** **CONSIDERING 55 Bar OF STATIC PRESSURE IN THE CHAMBERS**
*** **CONSIDERING A PUMP CAPACITY OF 0.6 lpm**
**** **3° OF TRAVEL ARE LOST WHILE THE OPERATOR IS BEING INSTALLED**

3 ELECTRICAL PREPARATIONS

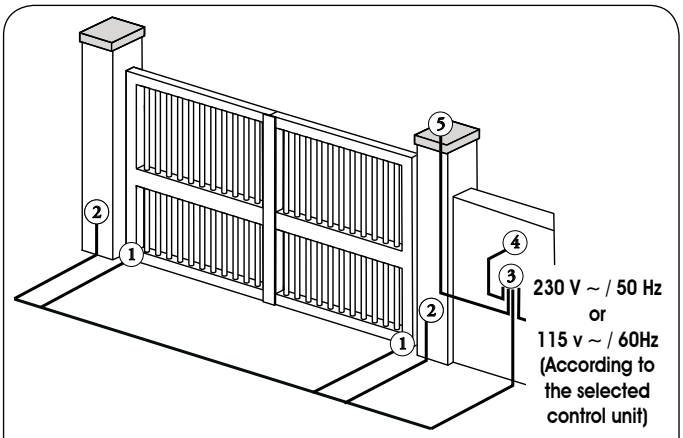

① S800H Operators with encoder
2x2.5 mm ² / AVG 12 for motor (minimum) (Max. length 20 m)
2x0.5 mm ² / AVG 20 for encoder bus (Max. length 100 m)
② Bus 2 Easy Photocells 2x0.5 mm ² / AVG 20 (Max. length 100 m)
③ Control unit
(To be selected according to the installed power supply)
2x2.5 mm ² / AVG 12 for powering
④ Key operated push-button 2x0.5 mm ² / AVG 20
⑤ Flashing lamp 24 V 2x1.5 mm ² / AVG 16

Fig.2

ENGLISH

ENGLISH

4 INSTALLING THE OPERATOR

IMPORTANT: REMOVE THE ENCODER (Fig.1 ref. ⑨) BEFORE YOU BEGIN MECHANICAL INSTALLATION

4.1 OPERATOR WITHOUT MECHANICAL EMERGENCY RELEASE

1) Take the gate to its open position.
2) Consulting the instructions in chapter 7.1, hydraulically release the operator, using the key on the release screw (Fig. 3 ref.①)

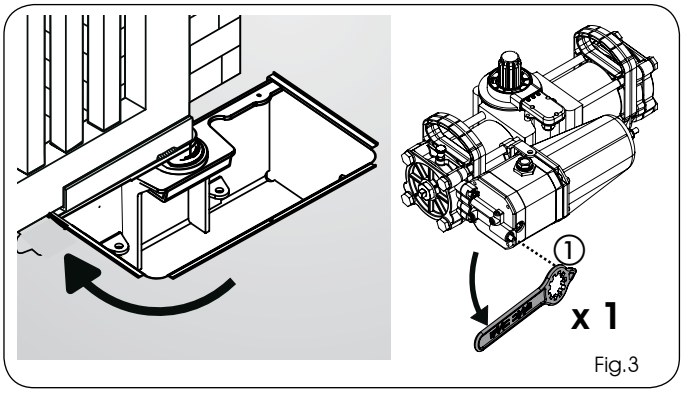

Fig.3

3) On the operator, unscrew the plug (Fig.4 ref. A) of the screw of the closing travel limit device (Fig.4 ref. ①) and check if the screw is completely tight.
4) **Back off the closing travel limit screw (Fig.4 ref. B) by one turn (IMPORTANT FOR CORRECT COUPLING OF THE PINION-GROOVED BUSH DURING INSTALLATION).**
5) Turn the operator pinion with the supplied wrench (Fig. 5 ref. ①), **in the gate closing direction** as shown in Fig.5, up to the internal stop point of the piston, and remove the key.
6) **Without moving the pinion,** insert the supplied wrench on the operator as shown in Fig.6, and make sure that it indicates 0 (ZERO) on the operator's plastic panel (Fig.6 ref.①). If necessary rotate the pinion. **(IMPORTANT FOR CORRECT COUPLING OF THE PINION-GROOVED BUSH DURING INSTALLATION).**

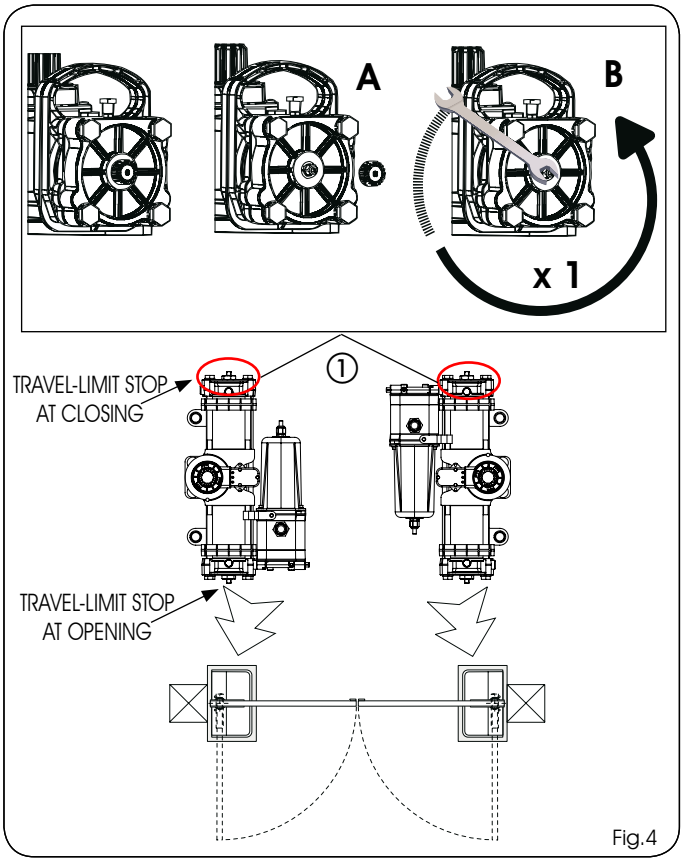

Fig.4

TURN THE KEY TILL REACHING THE MECHANICAL STOP-POINT AND WITHDRAW IT FROM THE PINION

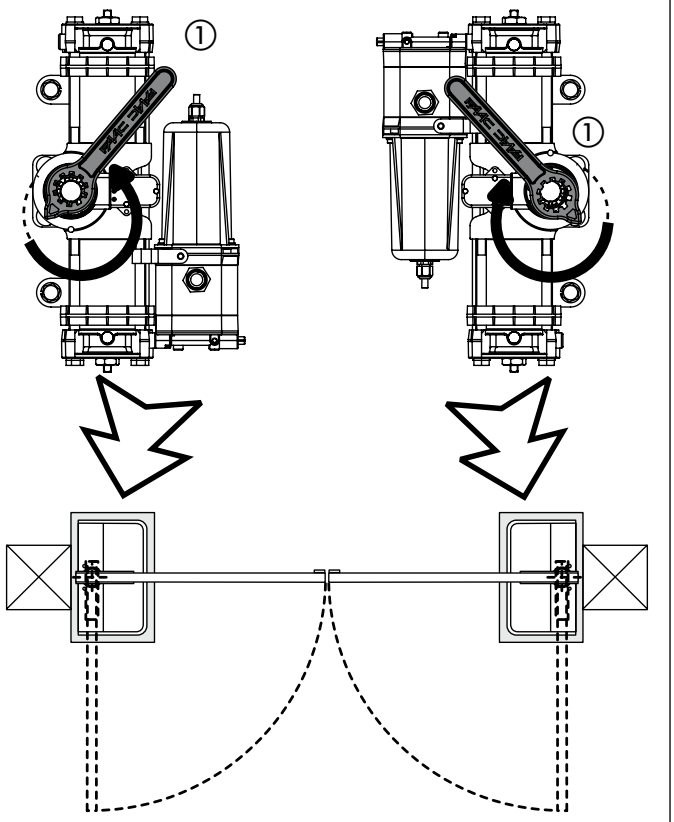

Fig.5

INSERT THE KEY WITHOUT MOVING THE PINION AND CHECK IF IT INDICATES ZERO

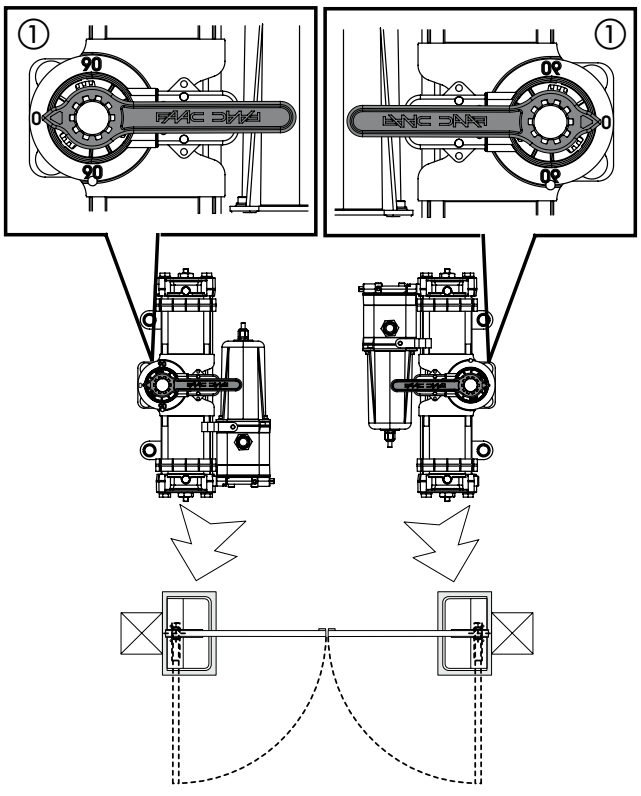

Fig.6

NOTE: if necessary, lightly screw the closing travel-limit screw
7) Remove the adjustment wrench, screw the plug of the travel limit screw and grease the pinion.
8) Using the handles, insert the operator in the bearing case as shown in Fig.7-8,
9) Close the gate.
10) Raise the operator with its handles (Fig.10 ref. A), inserting the pinion in the grooved bush of the bearing case. To facilitate the operation, slightly rotate the operator until coupling takes place.

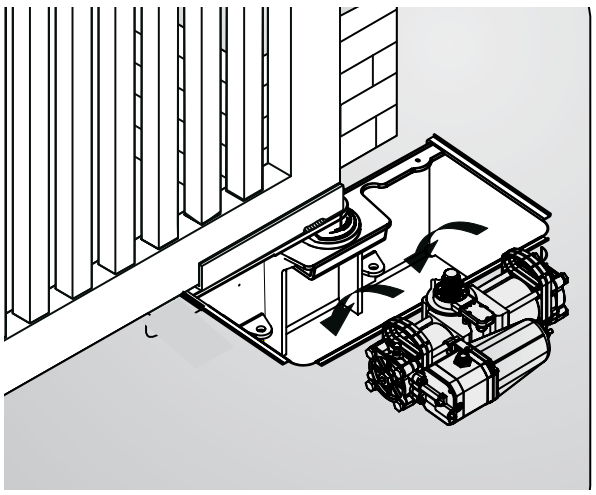

Fig.7

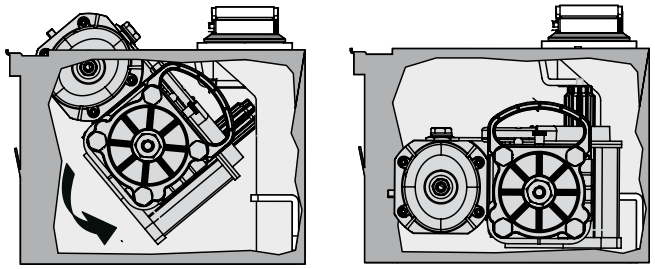

Fig.8

11) Place the supplied key under the operator, as shown in figure 10 ref. B, C
12) Insert and screw the fastening screws with groover and washer as shown in Fig. 10 ref. C, in order to secure the operator to the bearing case as shown in Fig. 11.
13) Open the gate and check if the opening travel-limit stop is correctly positioned; if necessary, adjust the travel-limit stop, referring to the instructions in chapter 5.
14) Close the gate and check if the closing travel-limit stop is correctly positioned; if necessary, adjust the travel-limit stop, referring to the instructions in chapter 5.
15) Hydraulically shut down the operator as per instructions in chapter 7.1.
16) As described in the instructions for the control board, make the electrical connections, taking care over encoder polarity.
17) Secure the cover of the bearing case with the supplied screws.

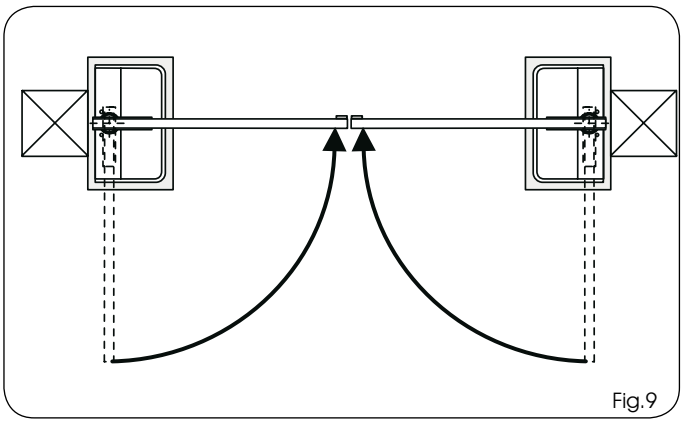

Fig.9

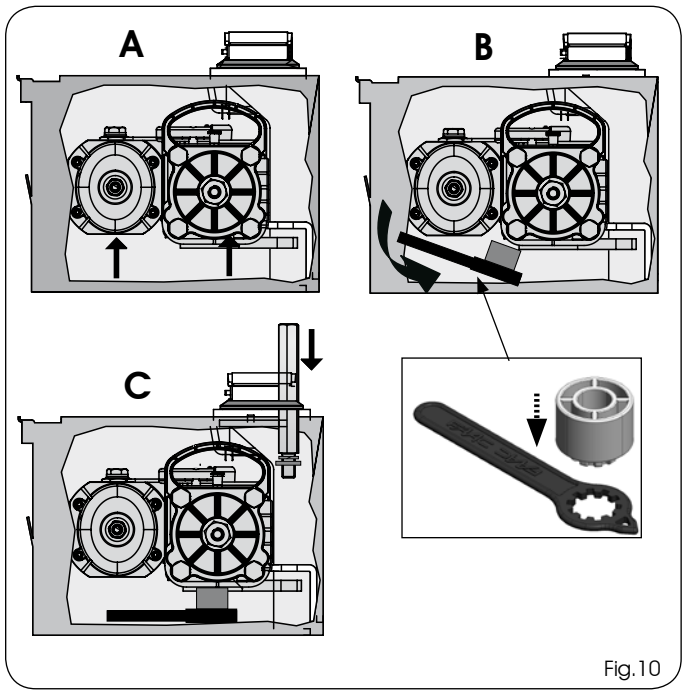

Fig.10

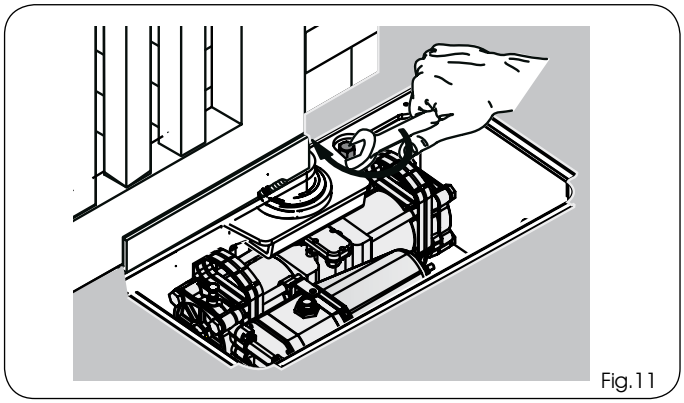

Fig.11

ENGLISH

ENGLISH

4.2 OPERATOR WITH MECHANICAL RELEASE

1) Take the gate to its open position.
2) Consulting the instructions in chapter 7.1, hydraulically release the operator, using the key (Fig. 1 ref. ⑱) on the release screw (Fig. 12 ref. ①)
3) On the operator, unscrew the cap (Fig.13 ref.A) of the closing travel-limit screw (Fig.13 ref. ①) and check if the screw is completely tight.
4) **Unscrew the closing travel-limit (Fig.13 ref.①) screw by one turn (IMPORTANT FOR CORRECT COUPLING OF THE PINION-MECHANICAL RELEASE DURING INSTALLATION).**
5) Turn the operator pinion with the supplied key, **in the gate closing direction** as shown in Fig.14, up to the internal stop point of the piston, and remove the key.

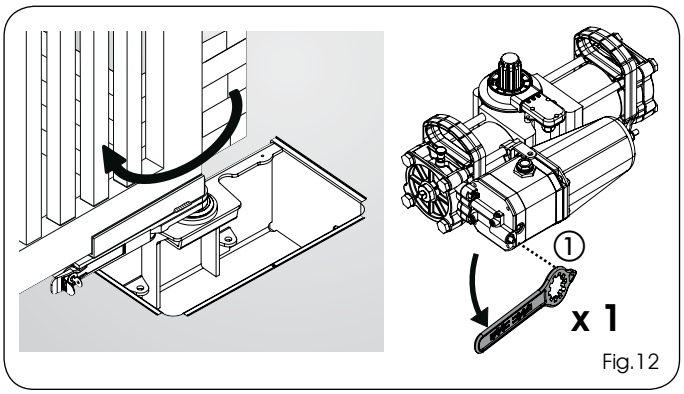

Fig.12

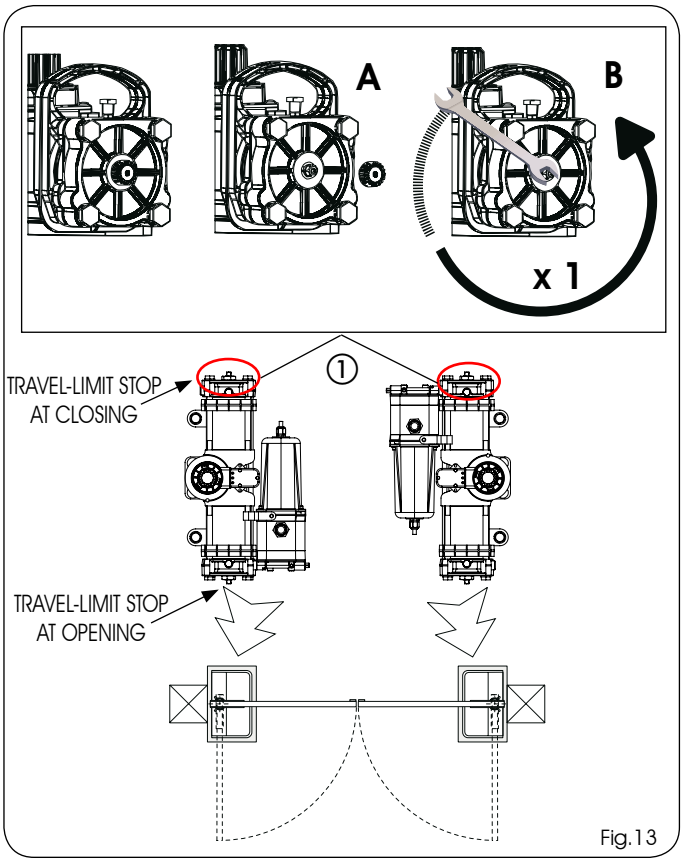

Fig.13

6) **Without moving the pinion**, insert the supplied key on the operator as shown in Fig.15, and make sure that it indicates 0 (ZERO) on the operator's plastic panel (Fig.15 ref.①). If necessary rotate the pinion.
(IMPORTANT FOR CORRECT COUPLING OF THE PINION-MECHANICAL RELEASE DURING INSTALLATION).
NOTE: if necessary, lightly screw the closing travel-limit screw.

TURN THE KEY TILL REACHING THE MECHANICAL STOP-POINT AND WITHDRAW IT FROM THE PINION

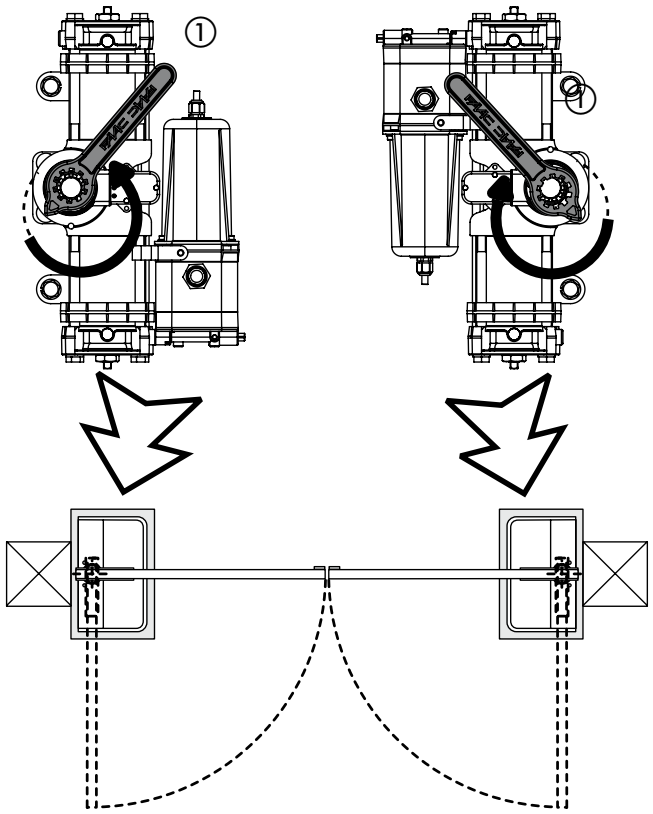

Fig.14

INSERT THE KEY WITHOUT MOVING THE PINION AND CHECK IF IT INDICATES ZERO

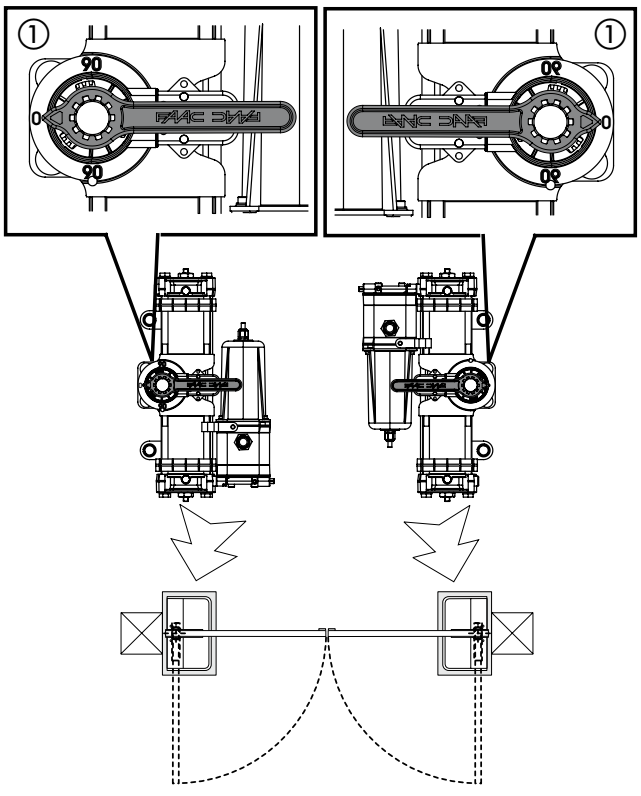

Fig.15

7) Remove the adjustment key and screw the cap of the travel-limit screw
8) Lightly grease the operator pinion.
9) Using the handles, insert the operator in the bearing case as shown in Fig.17 A,B
10) Take the gate to its **CLOSED position**.

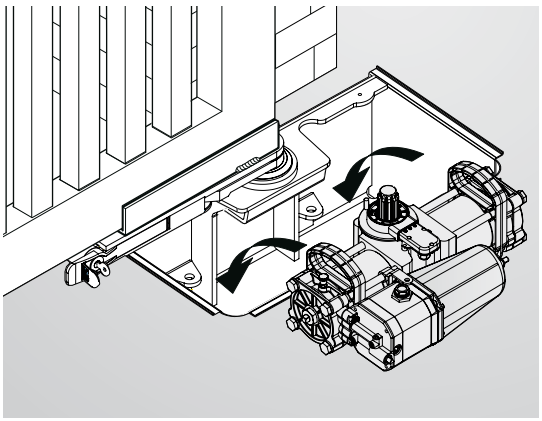

Fig.16

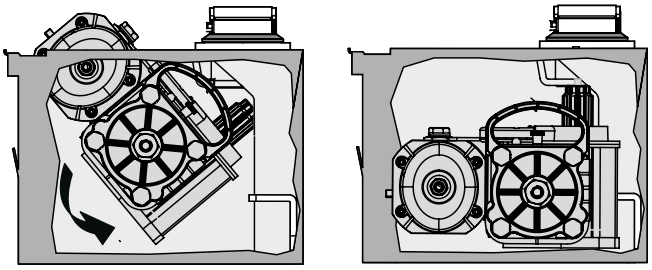

Fig.17

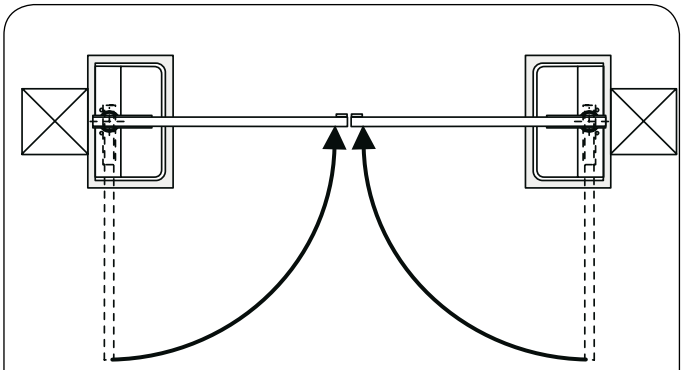

Fig.18

11) Free the mechanical release, referring to paragraph 7.2.

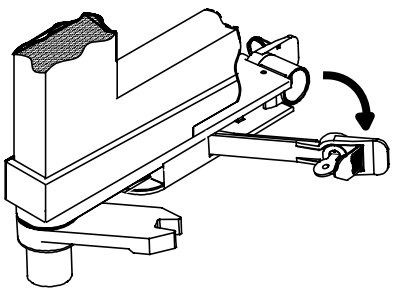

Fig.19

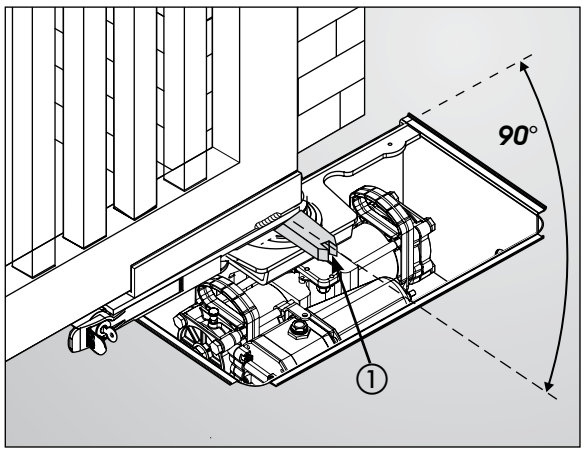

Fig.20

12) Take the released gate into open position, making sure that the released part freed from the gate **remains in the gate closed position as shown in Fig.20 ref.** ①.
13) Raise the operator with its handles (Fig.21 ref. A), inserting the pinion in the grooved bush in the bearing case. To make the operation easier, slightly rotate the operator until coupling takes place.

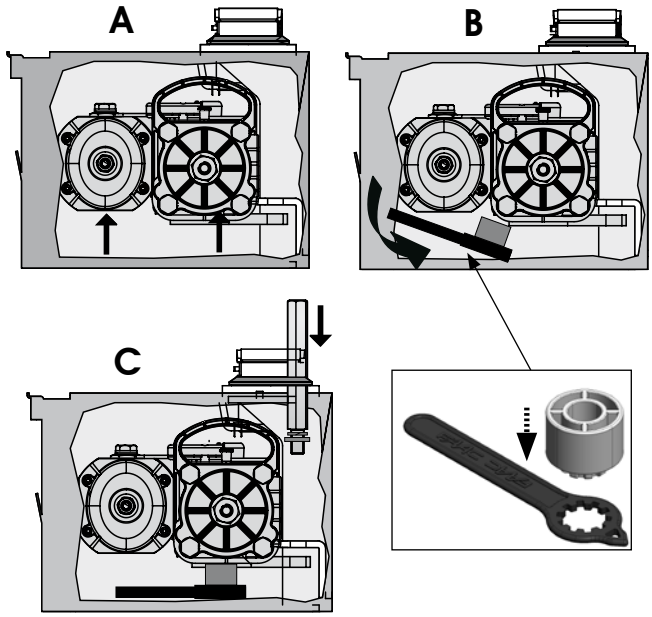

Fig.21

14) Place the supplied key under the operator, as shown in figure 21, in order to support the motor.
15) Insert and screw the fastening screws with groover and washer as shown in Fig. 21 C, in order to secure the operator to the bearing case.
16) Close the gate and re-lock it to the mechanical release.

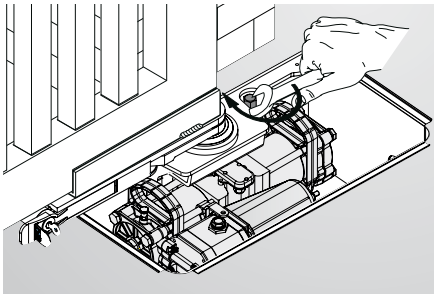

Fig.22

ENGLISH

17) Open and close the gate, checking and, if necessary, adjusting the respective travel limit devices as described in chapter 5.
18) As described in the instructions for the control unit, make the electrical connections, taking care over encoder polarity.
19) Hydraulically shut down the operator as per instructions in chapter 7.1.

5 INTERNAL MECHANICAL TRAVEL-LIMIT STOPS (POSITIVE STOP)

The S800H operator is supplied standard with internal opening and closing mechanical stops. This is to facilitate the installation operations because there is no need to construct the mechanical stop elements.
The mechanical travel-limit stops (POSITIVE STOP) can be adjusted in the last 30° of the operator's MAXIMUM travel, at both opening and closing.
FAAC SUPPLIES THE TRAVEL LIMIT DEVICES TOTALLY OPEN (MAXIMUM PINION ROTATION ANGLE) ,

5.1 ADJUSTMENT OF THE TRAVEL-LIMIT STOPS

1) Hydraulically release the operator. (See chpt 7.1)
2) Close the leaf, manually taking it into its closed position.
3) Unscrew the cap (Fig.23 ref.A) of the closing travel-limit screw (Fig.23 ref.①)
4) UNSCREW the travel-limit stop screw (Fig.25 ref.B) at closing (Fig.25 ref.①), until the leaf begins to move.
5) Fasten the cap (Fig.23 ref.A) of the travel-limit stop screw.
6) Open the leaf, manually taking it into its opening position.
7) Unscrew the cap of the screw (Fig.23 ref.A) of the opening travel-limit stop (Fig.23 ref.②).
8) UNSCREW the travel-limit stop screw (Fig.23 ref. ②), until the leaf begins to move.
9) Fasten the cap of the travel-limit stop screw.
10) Open and close the gate to check if the travel-limit stop is correctly adjusted.
11) Shut-down the operator again, following the instructions in chapter 7.1.

6 FINAL OPERATIONS

⚠ ***To avoid excessive voltage drops, we recommend that the length of the motor cables with a section of 2.5 mm, should not exceed 20 m. The maximum total length of the BUS cables must not exceed 100 m.***

1) Place the encoder in its seat on the motor.
2) Connect the motor (Fig.1 ref. ⑧) and the encoder (Fig.1 ref. ⑨) to the control unit, following the specific instructions.
3) Secure the cover of the bearing case with the supplied screws (Fig.24;25).
4) Where specified by current legal regulations, place at least two signs with the words "Danger: Automatic motion" on both sides of the automated system.

7 MANUAL OPERATION

⚠ ***BEFORE CARRYING OUT THE RELEASE AND SHUT-DOWN OPERATIONS, MAKE SURE THAT YOU HAVE CUT POWER TO THE OPERATOR AND THAT IT IS NOT MOVING***

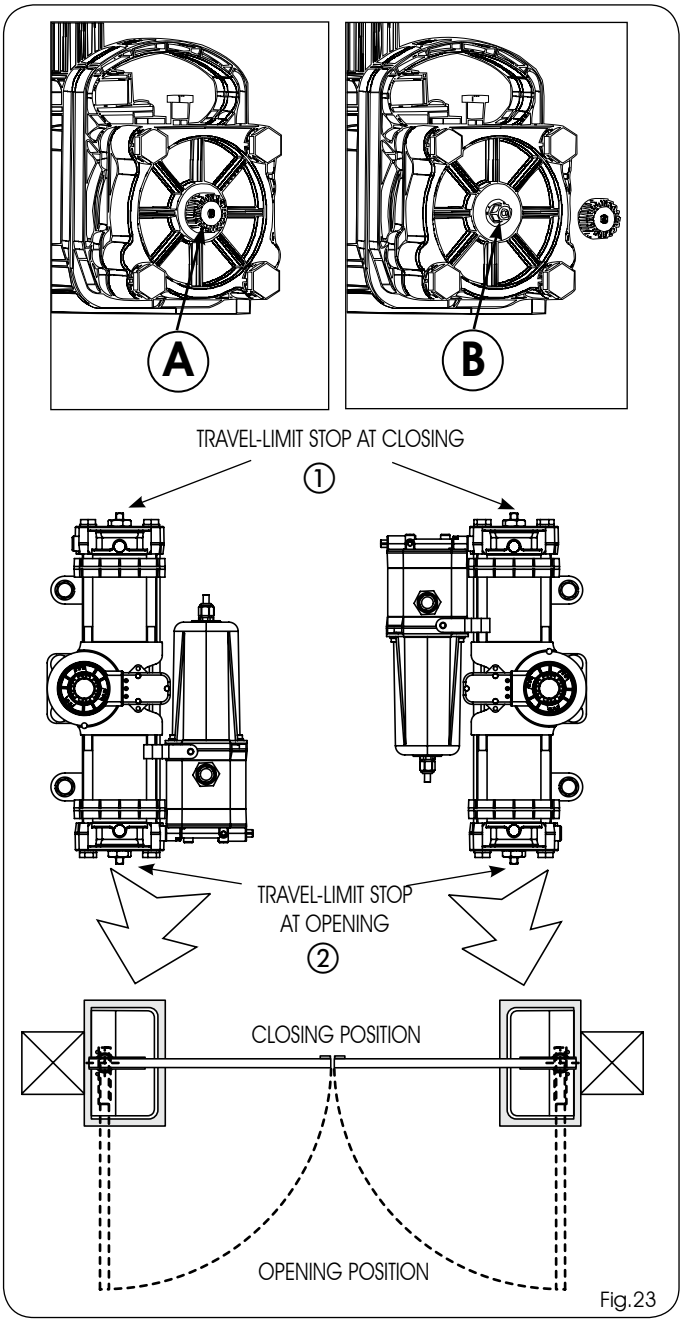

Fig.23

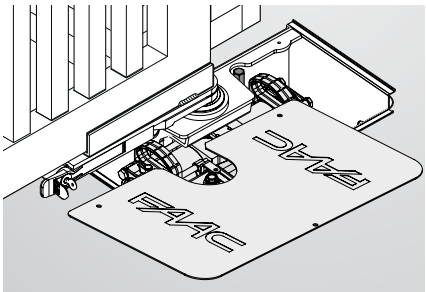

Fig.24

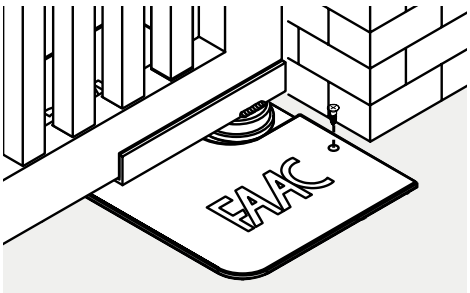

Fig.25

7.1 HYDRAULIC RELEASE OF THE OPERATOR

If the gate has to be moved manually due to a power cut or fault of the automated system, use the hydraulic release device with the release key (Fig.26 ref. ②):
1) Remove the cover from the bearing case.
2) Turn the release screw (Fig.26 ref.①) inserting the triangular recess of the supplied key (Fig.26 ref. ②):
- To **RELEASE**, turn the screw anti-clockwise by one turn. (DO NOT COMPLETELY UNFASTEN THE SCREW TO AVOID OIL COMING OUT.
- To **SHUT-DOWN** again, turn the screw clockwise up to the mechanical stop point.

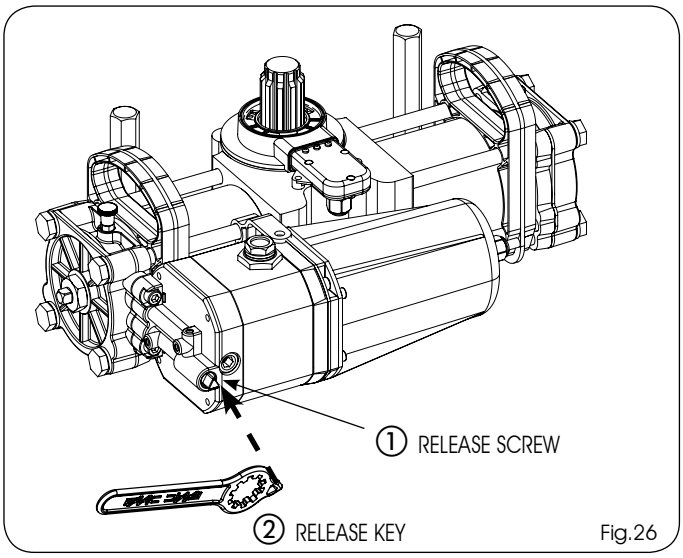

Fig.26

7.2 MECHANICAL EMERGENCY RELEASE (OPTIONAL)

For the S800H operator, a manual mechanical emergency release is available as an optional item.
If the gate has to be moved manually due to a power cut or fault of the automated system, use the release key device.
The device is inserted on the gate support bracket (Fig.27 ref. ①) and enables you to release the system from both inside and outside the premises.

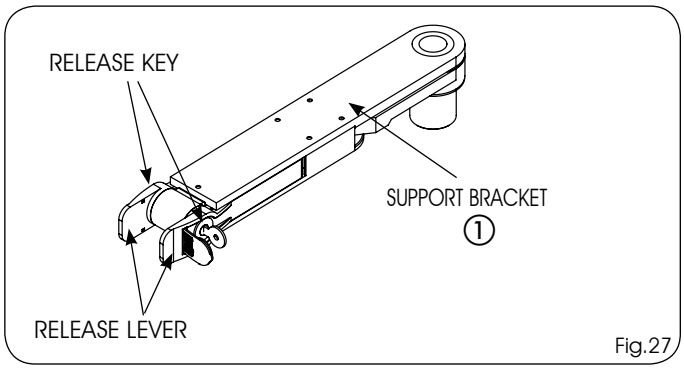

Fig.27

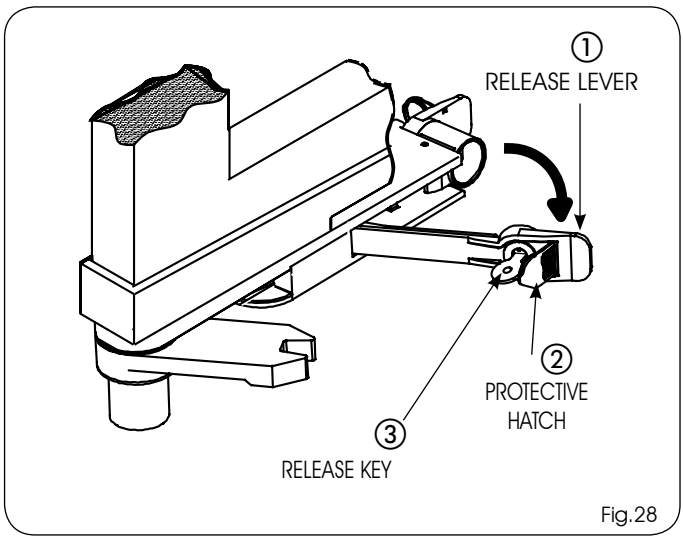

Fig.28

Procedure for manual leaf operation:

1) Open the protective hatch (Fig.28 ref. ②).
2) Insert the release key in the lock (Fig.28 ref. ③) and turn it clockwise sense up to its stop point.
3) Pull the release lever toward you (Fig.28 ref. ①).
4) Move the leaf by hand.

Procedure for restoring the system to normal operation:
1) Move the release lever back to its rest position (Fig.27)
2) Insert the release key in the lock (Fig.28 ref.③), turn it in the opposite direction up to the stop point and remove it.
3) Close the protective plug of the lock.
4) Move the leaf manually until it hooks on the shut-down bracket.

8 MAINTENANCE

Run a functional check of the system at least every 6 months, with special attention to the efficiency of the safety and release devices (including the thrust force of the operator), and to perfect operation of the gate hinges.
The safety devices installed on the system must be checked every 6 months.

8.1 BLEEDING OPERATIONS

THE S800H OPERATOR IS SUPPLIED WITH THE HYDRAULIC CIRCUIT ALREADY AIR FREE. DO NOT BLEED. BLEEDING IS ONLY NECESSARY IN THE EVENT OF MAINTENANCE OF THE HYDRAULIC SYSTEM OR TOPPING-UP OIL LEVEL.

The presence of air in the hydraulic circuit causes the automated system to operate incorrectly, i.e. a faulty movement of the leaf and too much noise while operating.
Procedure to avoid this problem:
1) Command the gate to open.
2) While the leaf is moving, loosen the opening bleed screw (Fig.29 ref.①)

ENGLISH

3) Using the bleed screw, allow the air to come out from the hydraulic circuit until non-emulsified oil appears.
4) Tighten the bleed screw before the operator finishes the opening cycle.
5) Command the gate to close.
6) While the leaf is moving, loosen the closing bleed screw (Fig.29 ref.②)
7) Using the bleed screw, allow the air to come out from the hydraulic circuit until non-emulsified oil appears.
8) Tighten the bleed screw before the operator finishes the closing cycle.
9) Repeat these operations several times.
10) Add oil till the oil level is just below the cap (Fig. 30, ref. ①)

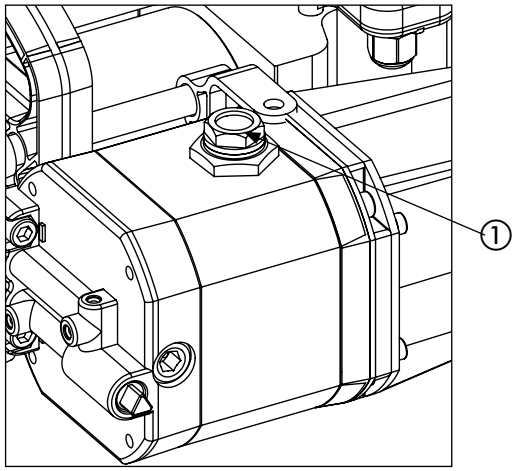

Fig.30

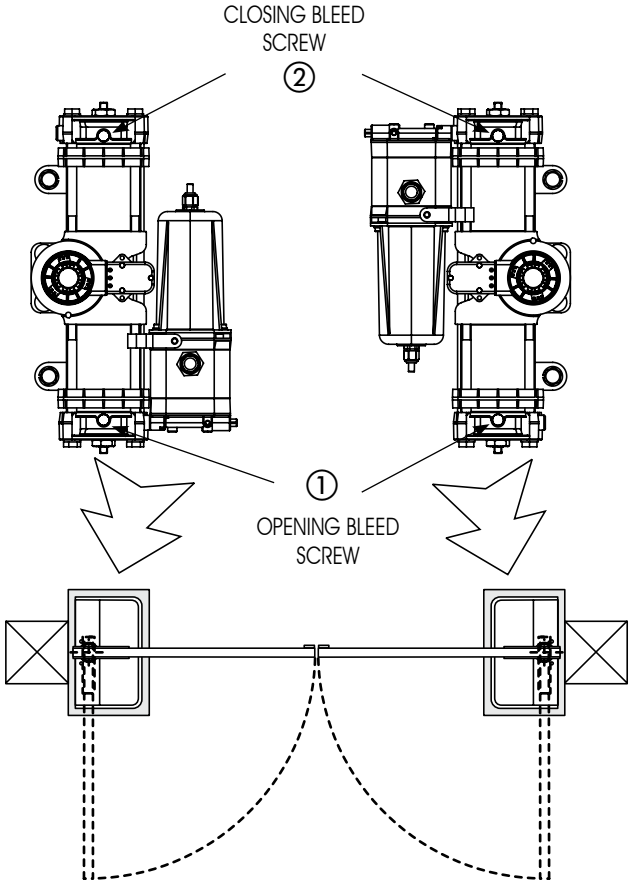

Fig.29

Le descrizioni e le illustrazioni del presente manuale non sono impegnative. La FAAC si riserva il diritto, lasciando inalterate le caratteristiche essenziali dell'apparecchiatura, di apportare in qualunque momento e senza impegnarsi ad aggiornare la presente pubblicazione, le modifiche che essa ritiene convenienti per miglioramenti tecnici o per qualsiasi altra esigenza di carattere costruttivo o commerciale.

The descriptions and illustrations contained in the present manual are not binding. FAAC reserves the right, whilst leaving the main features of the equipments unaltered, to undertake any modifications it holds necessary for either technical or commercial reasons, at any time and without revising the present publication.

Les descriptions et les illustrations du présent manuel sont fournies à titre indicatif. FAAC se réserve le droit d'apporter à tout moment les modifications qu'elle jugera utiles sur ce produit tout en conservant les caractéristiques essentielles, sans devoir pour autant mettre à jour cette publication.

Die Beschreibungen und Abbildungen in vorliegendem Handbuch sind unverbindlich. FAAC behält sich das Recht vor, ohne die wesentlichen Eigenschaften dieses Gerätes zu verändern und ohne Verbindlichkeiten in Bezug auf die Neufassung der vorliegenden Anleitungen, technisch bzw. konstruktiv/kommerziell bedingte Verbesserungen vorzunehmen.

Las descripciones y las ilustraciones de este manual no comportan compromiso alguno. FAAC se reserva el derecho, dejando inmutadas las características esenciales de los aparatos, de aportar, en cualquier momento y sin comprometerse a poner al día la presente publicación, todas las modificaciones que considere oportunas para el perfeccionamiento técnico o para cualquier otro tipo de exigencia de carácter constructivo o comercial.

De beschrijvingen in deze handleiding zijn niet bindend. FAAC behoudt zich het recht voor op elk willekeurig moment de veranderingen aan te brengen die het bedrijf nuttig acht met het oog op technische verbeteringen of alle mogelijke andere productie- of commerciële eisen, waarbij de fundamentele eigenschappen van de apparaat gehandhaafd blijven, zonder zich daardoor te verplichten deze publicatie bij te werken.

FAAC S.p.A.
Via Calari, 10
40069 Zola Predosa (BO) - ITALIA
Tel. 0039.051.61724 - Fax. 0039.051.758518
www.faac.it
www.faacgroup.com

732706 - Rev. B