FAAC ENGLISH

CE DECLARATION OF CONFORMITY FOR MACHINES

(DIRECTIVE 2006/42/EC)

Manufacturer: FAAC S.p.A.

Address: Via Benini, 1 - 40069 Zola Predosa BOLOGNA - ITALY

Declares that: Operator model 740 - 24V

is built to be integrated into a machine or to be assembled with other machinery to create a machine under the provisions of Directive 2006/42/EC

conforms to the essential safety requirements of the following EEC directives

2006/95/EC Low Voltage directive
2004/108/EC Electromagnetic Compatibility directive

and also declares that it is prohibited to put into service the machinery until the machine in which it will be integrated or of which it will become a component has been identified and declared as conforming to the conditions of Directive 2006/42/EC

Bologna, 01-05-2008

The Managing Director
A. Bassi

WARNINGS FOR THE INSTALLER

GENERAL SAFETY OBLIGATIONS

1) **ATTENTION! To ensure the safety of people, it is important that you read all the following instructions. Incorrect installation or incorrect use of the product could cause serious harm to people.**
2) Carefully read the instructions before beginning to install the product.
3) Do not leave packing materials (plastic, polystyrene, etc.) within reach of children as such materials are potential sources of danger.
4) Store these instructions for future reference.
5) This product was designed and built strictly for the use indicated in this documentation. Any other use, not expressly indicated here, could compromise the good condition/operation of the product and/or be a source of danger.
6) FAAC declines all liability caused by improper use or use other than that for which the automated system was intended.
7) Do not install the equipment in an explosive atmosphere: the presence of inflammable gas or fumes is a serious danger to safety.
8) The mechanical parts must conform to the provisions of Standards EN 12604 and EN 12605.
   For non-EU countries, to obtain an adequate level of safety, the Standards mentioned above must be observed, in addition to national legal regulations.
9) FAAC is not responsible for failure to observe Good Technique in the construction of the closing elements to be motorised, or for any deformation that may occur during use.
10) The installation must conform to Standards EN 12453 and EN 12445.
    For non-EU countries, to obtain an adequate level of safety, the Standards mentioned above must be observed, in addition to national legal regulations.
11) Before attempting any job on the system, cut out electrical power .
12) The mains power supply of the automated system must be fitted with an all-pole switch with contact opening distance of 3mm or greater. Use of a 6A thermal breaker with all-pole circuit break is recommended.
13) Make sure that a differential switch with threshold of 0.03 A is fitted upstream of the system.
14) Make sure that the earthing system is perfectly constructed, and connect metal parts of the means of the closure to it.
15) The automated system is supplied with an intrinsic anti-crushing safety device consisting of a torque control. Nevertheless, its tripping threshold must be checked as specified in the Standards indicated at point 10.
16) The safety devices (EN 12978 standard) protect any danger areas against **mechanical movement Risks**, such as crushing, dragging, and shearing.
17) Use of at least one indicator-light (e.g. FAACLIGHT) is recommended for every system, as well as a warning sign adequately secured to the frame structure, in addition to the devices mentioned at point “16”.
18) FAAC declines all liability as concerns safety and efficient operation of the automated system, if system components not produced by FAAC are used.
19) For maintenance, strictly use original parts by FAAC.
20) Do not in any way modify the components of the automated system.
21) The installer shall supply all information concerning manual operation of the system in case of an emergency, and shall hand over to the user the warnings handbook supplied with the product.
22) Do not allow children or adults to stay near the product while it is operating.
23) Keep remote controls or other pulse generators away from children, to prevent the automated system from being activated involuntarily.
24) Transit is permitted only when the automated system is idle.
25) The user must not attempt any kind of repair or direct action whatever and contact qualified personnel only.
26) Maintenance: check at least every 6 months the efficiency of the system, particularly the efficiency of the safety devices (including, where foreseen, the operator thrust force) and of the release devices.
27) **Anything not expressly specified in these instructions is not permitted.**

FAAC ENGLISH

AUTOMATED SYSTEM 740-24V

These instructions apply to the following models:

740 24V

The 740 gearmotor is an electro-mechanical operator designed for moving sliding gates.
The non-reversing reduction system ensures the gate is mechanically locked when the gearmotor is not operating, therefore it is not necessary to install any electric lock

A convenient manual release with customised key makes it possible to move the gate in the event of a power failure or malfunction of the operator.

The 740 gearmotor was designed and built for controlling vehicle access. AVOID ANY OTHER USE WHATEVER.

1. DESCRIPTION AND TECHNICAL SPECIFICATIONS

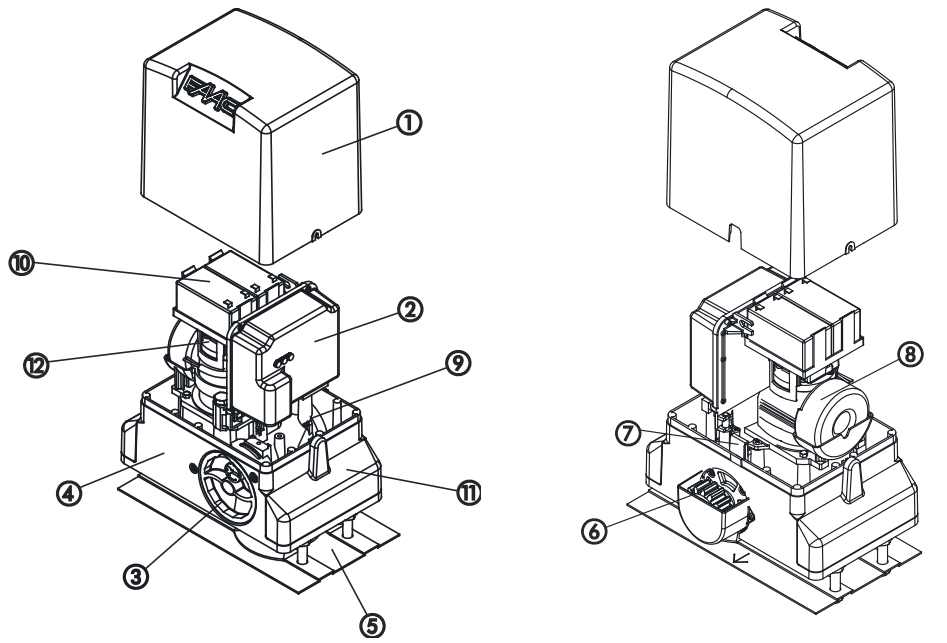

1. Motor lid
2. Electronic control unit
3. Release device
4. Gearmotor body
5. Foundation plate
6. Pinion
7. Limit switch
8. Transformer
9. Cable holes
10. Battery (optional)
11. Protective side panels
12. Encoder

Fig.01

MODEL	740 - 24V
Power supply	230/115 V~ 50/60 Hz
Absorbed power (W)	70
Absorbed current (A)	3
Capacitor (μF)	-
Thrust on pinion (daN)	40
Torque (Nm)	13.5
Winding thermal protection (°C)	-
Leaf max weight (Kg)	400
Type of pinion	Z16
Gate speed (m/min)	12
Gate max length (m)	15
Type of limit switch	Mechanical
Clutch	Electronic
Use frequency	100%
Operating temperature (°C)	-20 +55
Gearmotor weight (Kg)	8.5
Protection class	IP44
Gearmotor overall dimensions	See Fig.02

2. DIMENSIONS

Values are expressed in mm

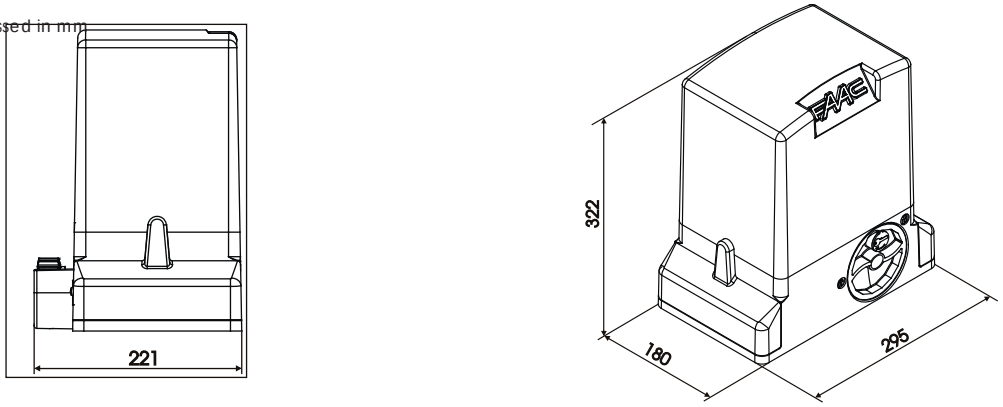

Fig.02

FAAC ENGLISH

3. MAXIMUM USE CURVE

The curve makes it possible to establish maximum work time (T) according to use frequency (F).
With reference to IEC 34-1 Standard, the 740 gearmotor with an S3 duty, can operate at a use frequency of 100%.
To ensure efficient operation, it is necessary to operate in the work range below the curve.

Important: The curve is obtained at a temperature of 20°C. Exposure to the direct sun rays can reduce use frequency down to 20%.

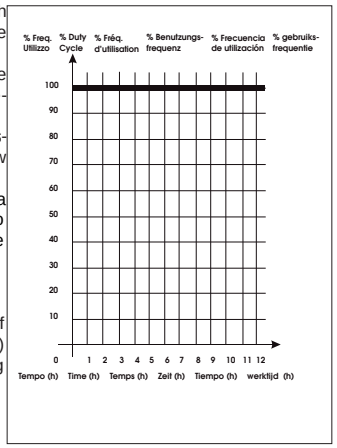

Calculation of use frequency

Use frequency is the percentage of effective work time (opening + closing) compared to total time of cycle (opening + closing + pause times).
Calculation formula:

$$\%\,F = \frac{Ta + Tc}{Ta + Tc + Tp + Ti} \times 100$$

where:
Ta = opening time
Tc = closing time
Tp = pause time
Ti = time of interval between two complete cycles

4. ELECTRICAL SET-UP (standard system)

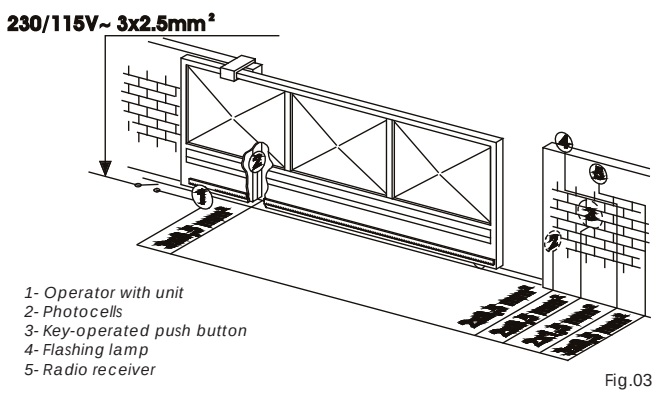

1- Operator with unit
2- Photocells
3- Key-operated push button
4- Flashing lamp
5- Radio receiver

Fig.03

5. INSTALLING THE AUTOMATED SYSTEM

5.1. Preliminary checks

To ensure safety and efficiency of the automated system, make sure the following requirements are observed before installing the system:

- The gate structure must be suitable for automation. The following are necessary in particular: wheel diameter must be in proportion to the weight of the gate, an upper track must be provided, plus mechanical travel stops to prevent the gate derailing.
- The soil must guarantee a perfect stability of the foundation plinth.
- There must be no pipes or electric cables in the plinth excavation area.
- If the gearmotor is located in the vehicle transit or manoeuvre area, adequate means of protection should be provided against accidental impact.
- Check if an efficient earthing is available for connection to the gearmotor.

5.2. Masonry for foundation plate

1- Assemble the foundation plate as shown in figure 04.
2- In order to ensure that the pinion and rack engage correctly, the foundation plate must be positioned as shown in Fig. 05 (right closing) or Fig. 06 (left closing).

Values are expressed in mm

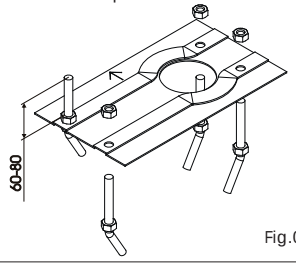

Fig.04

Warning: The arrow on the foundation plate must always point to the gate, see Figs. 05-06.

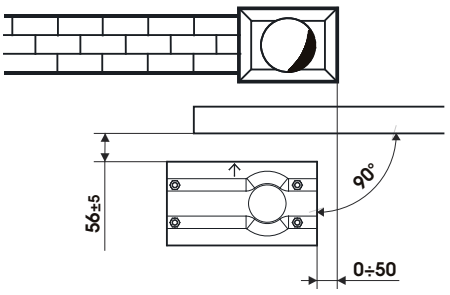

Values are expressed in mm

Fig.05

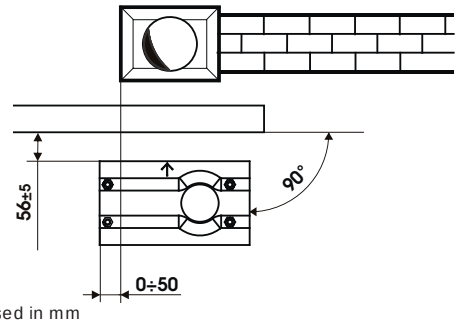

Values are expressed in mm

Fig.06

3- After determining the position of the foundation plate, make a plinth as shown in Fig. 07 and wall the plate, providing several sheaths for routing the cables. Using a spirit level, check if the plate is perfectly level. Wait for the cement to set.
4- Lay the electric cables for connection to the accessories and power supply as shown in diagram of Fig. 03. To facilitate connections to the control unit, allow the cables to protrude by at least 50 cm from the hole on the foundation plate.

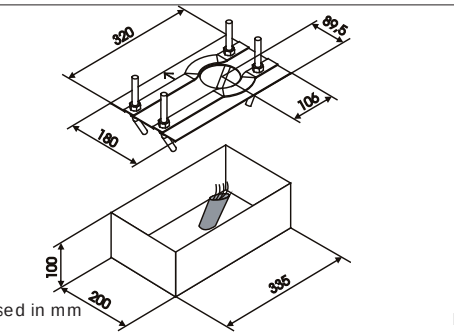

Values are expressed in mm

Fig.07

5.3. Mechanical installation

1- Remove the cover, Fig. 08 ref. 1.
2- Position the operator on the foundation plate, using the supplied washers and nuts as shown in Fig. 09. During this operation, route the cables through the appropriate openings in the motor body (See Fig.01 ref.9). If necessary, the two holes can be joined using a hammer to obtain a wider space.
3- Adjust the height of the gearmotor and the distance from the gate, referring to dimensions in Fig. 10.

Attention: This operation is necessary to ensure the rack is correctly secured and to enable any new adjustments.

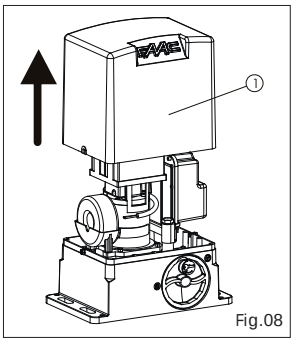

Fig.08

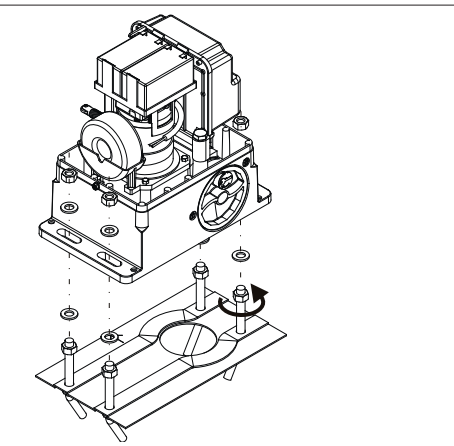

Fig.09

FAAC ENGLISH

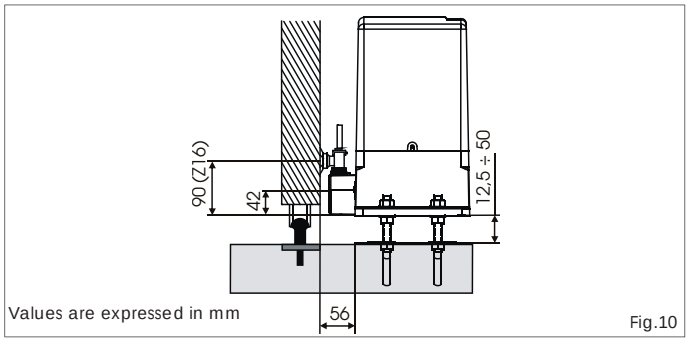

Fig.10

4- Secure the gearmotor to the plate, tightening the nuts.
5- Prepare the operator for manual operation as described in paragraph 8.

5.4. Assembling the rack

5.4.1. Steel rack to weld (Fig. 11)

1) Fit the three threaded pawls on the rack element, positioning them at the bottom of the slot. In this way, the slot play will enable any future adjustments to be made.
2) Manually take the leaf into its closing position.
3) Lay the first section of rack level on the pinion and weld the threaded pawl on the gate as shown in Fig. 13.
4) Move the gate manually, checking if the rack is resting on the pinion, and weld the second and third pawl.
5) Position another rack element end to end with the previous one, using a section of rack (as shown in Fig. 14) to synchronise the teeth of the two elements.
6) Move the gate manually and weld the three threaded pawls, thus proceeding until the gate is fully covered.

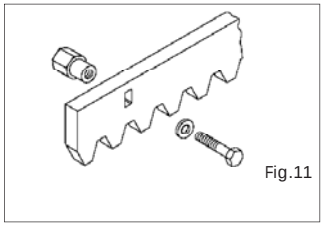
Fig.11

5.4.2. Steel rack to screw (Fig. 12)

1) Manually take the leaf into its closing position.
2) Lay the first section of rack level on the pinion and place the spacer between the rack and the gate, positioning it at the bottom of the slot.
3) Mark the drilling point on the gate. Drill a Ø 6,5 mm hole and thread with an M8 male tap. Screw the bolt.
4) Move the gate manually, checking if the rack is resting on the pinion, and repeat the operations at point 3.
5) Position another rack element end to end with the previous one, using a section of rack (as shown in figure 14) to synchronise the teeth of the two elements.
6) Move the gate manually and carry out the securing operations as for the first element, thus proceeding until the gate is fully covered.

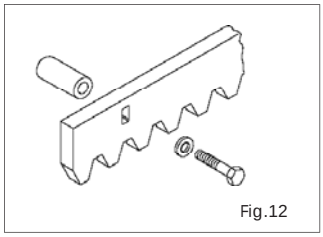
Fig.12

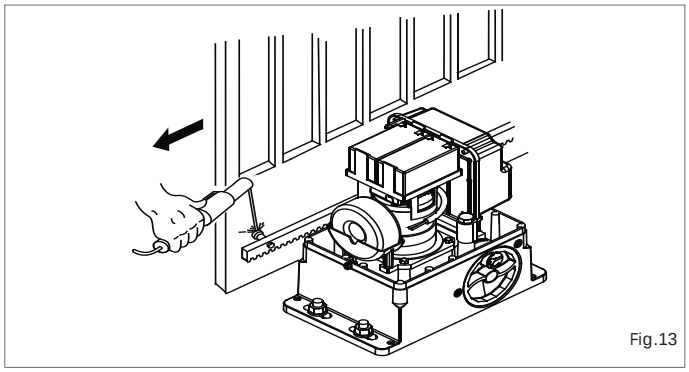
Fig.13

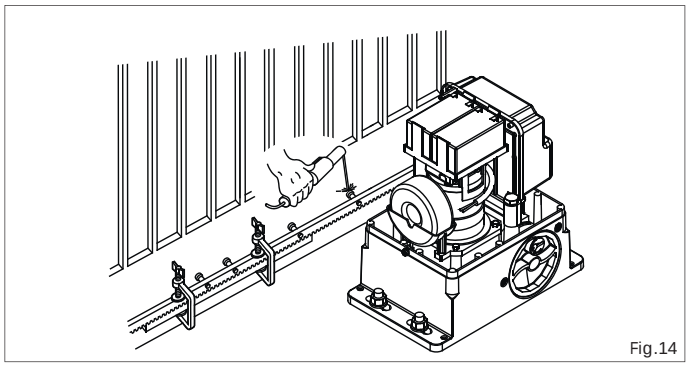
Fig.14

Notes on rack installation

- Make sure that, during the gate travel, all the rack elements do not exit the pinion.
- **Do not, on any account, weld the rack elements either to the spacers or to each other.**
- When the rack has been installed, to ensure it meshes correctly with the pinion, it is advisable to lower the gearmotor position by about 1.5 mm (Fig.15).
- Manually check if the gate correctly reaches the mechanical limit stops maintaining the pinion and rack coupled and make sure there is no friction during gate travel.
- Do not use grease or other lubricants between rack and pinion.

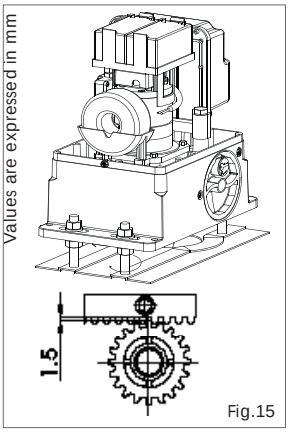

Fig.15

6. START-UP

6.1. Control board connection

Before attempting any work on the board (connections, programming, maintenance), always turn off power.
Follow points 10, 11, 12, 13 and14 of the GENERAL SAFETY OBLIGATIONS.
Following the instructions in Fig. 3, route the cables through the raceways and make the necessary electric connections to the selected accessories.
Always separate power cables from control and safety cables (push-button, receiver, photocells, etc.). To avoid any electric noise whatever, use separate sheaths.

6.1.1. Earthing

Connect the earth cables as shown in Fig.16 ref.A.

6.1.2. Electronic control unit

In the gearmotors, the electronic control unit is fitted to an adjustable support (Fig. 16 ref. 1) with transparent lid (Fig. 16 ref. 3).
The board programming push buttons (Fig. 16 ref. 4) have been located on the lid. This allow the board to be programmed without removing the lid.
For correct connection of the control unit, follow indications the specific instructions:

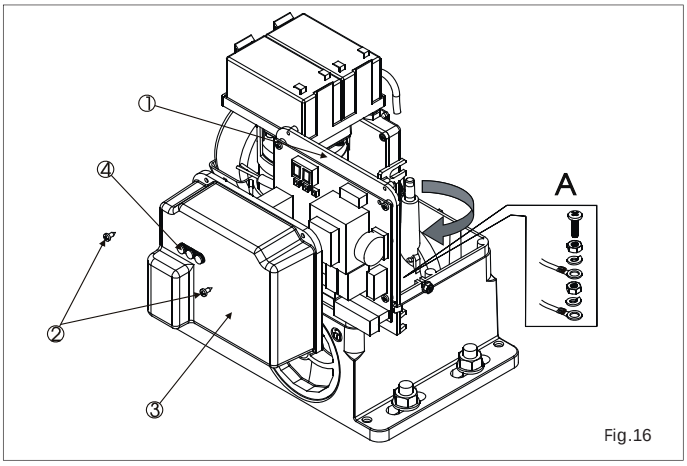

Fig.16

6.1.3. Connection of power cable

The **740 24V** gearmotor houses a screw terminal with fuse-holder (Fig 17) connected to the primary circuit of the toroidal transformer. The mains power cable 230 / 115 V ~ must be connected to this terminal, respecting what was specified in Fig. 17. If you have to replace the fuse, use a fuse type T1.6A/250V - 5x20 for a 230V power supply and type T3.15A/250V - 5x20 for a 115V power supply.

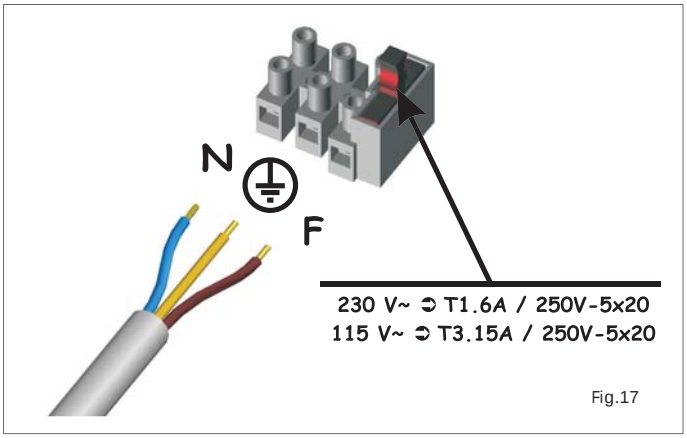

Fig.17

FAAC ENGLISH

6.2. Positioning the limit switches

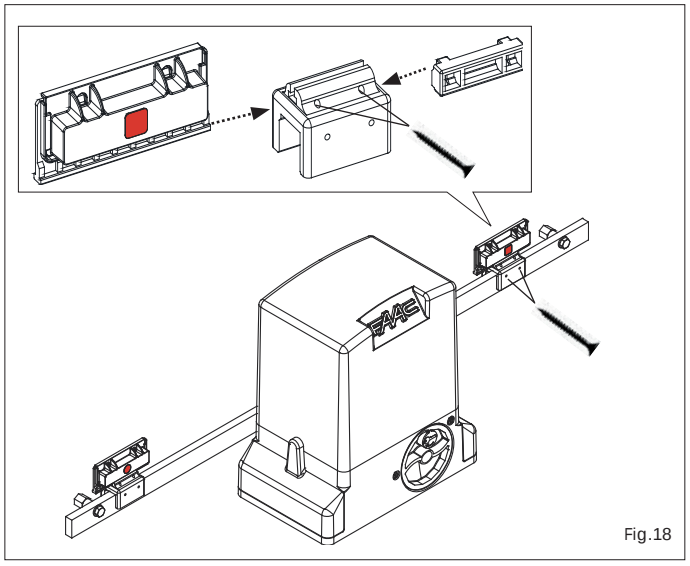
Fig.18

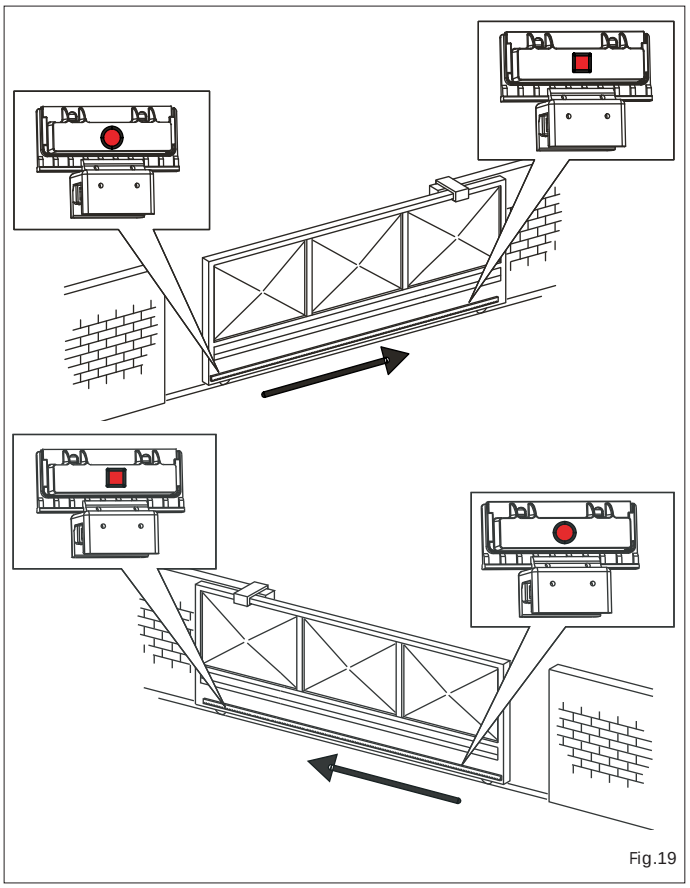
Fig.19

7. TESTING THE AUTOMATED SYSTEM

After installing the operator, carefully check operating efficiency of all accessories and safety devices connected to it.
Return the board support to its original position. Fit the cover, Fig. 20 ref. 1, and tighten the two side screws provided (Fig. 20 ref 2), and snap-fit the side panels (Fig. 20 ref.3). Apply the danger sticker on the top of the cover (Fig. 21).
Hand the "User's Guide" to the Customer and explain correct operation and use of the gearmotor, indicating the potentially dangerous areas of the automated system.

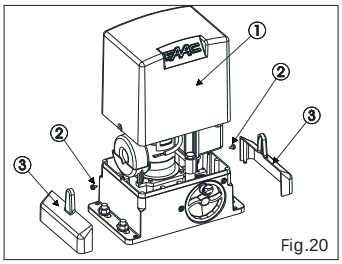

Fig.20

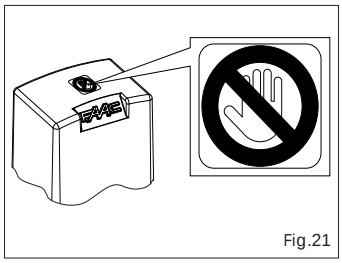
Fig.21

8. MANUAL OPERATION

Warning: Cut power to the system to prevent an involuntary pulse from activating the gate during the release manoeuvre.
To release the operator proceed as follows:
1) Insert the key provided and turn it clockwise as shown in Fig. 22 ref. 1 and 2.
2) Turn the release system clockwise, until the mechanical stop is reached, Fig. 22 ref. 3.
3) Open and close the gate manually.

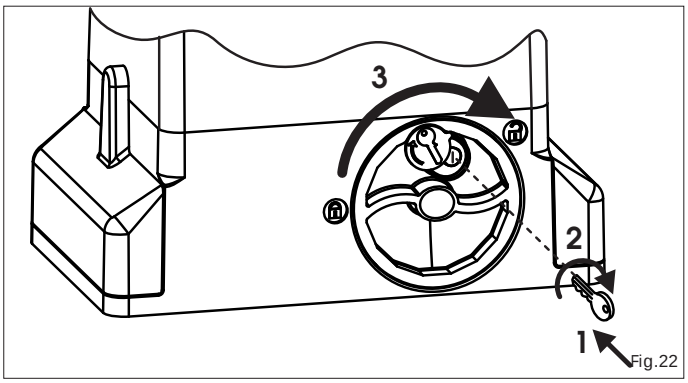

Fig.22

9. RESTORING NORMAL OPERATION

Warning: Cut power to the system to prevent an involuntary pulse from activating the gate during the manoeuvre for restoring normal operation.
To restore normal operation proceed as follows:
1) Turn the release system anti-clockwise, until its stop is reached, Fig. 23 ref. 1.
2) Turn the key anti-clockwise and remove it from the lock, Fig. 23 ref. 2 and 3.
3) Move the gate until the release system meshes (corresponds to gate locking)
4) Power up the system.

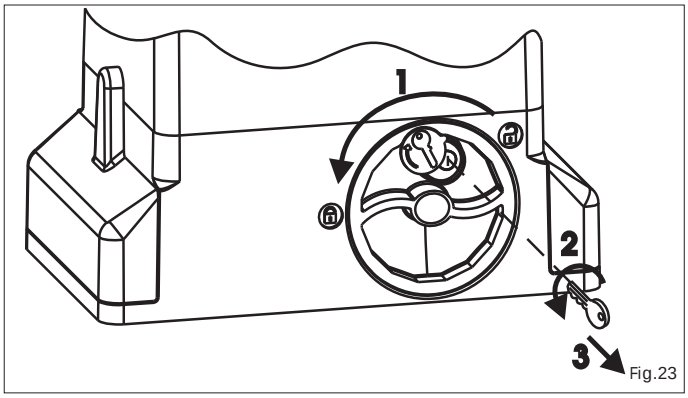

Fig.23

10. SPECIAL APPLICATIONS

There are no special applications.

11. MAINTENANCE

Check the operational efficiency of the system at least once every 6 months, especially as regards the efficiency of the safety and release devices (including operator thrust force).

12. REPAIRS

For any repairs, contact the authorised Repair Centres.

13. AVAILABLE ACCESSORIES

Refer to the catalogue for available accessories.

FAAC
ENGLISH

740 - 24V

User's guide

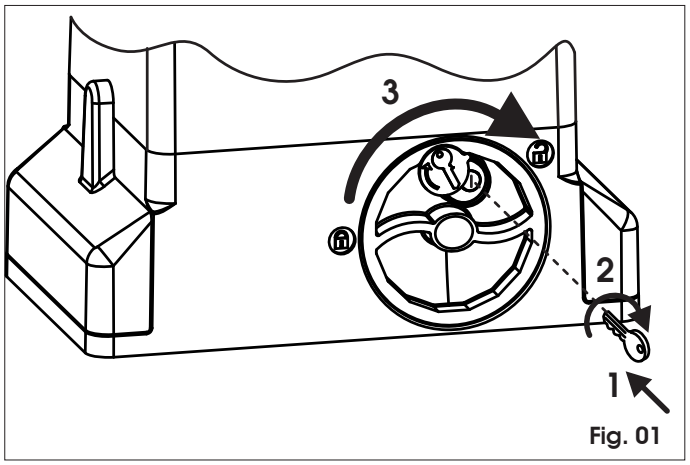

Fig. 01

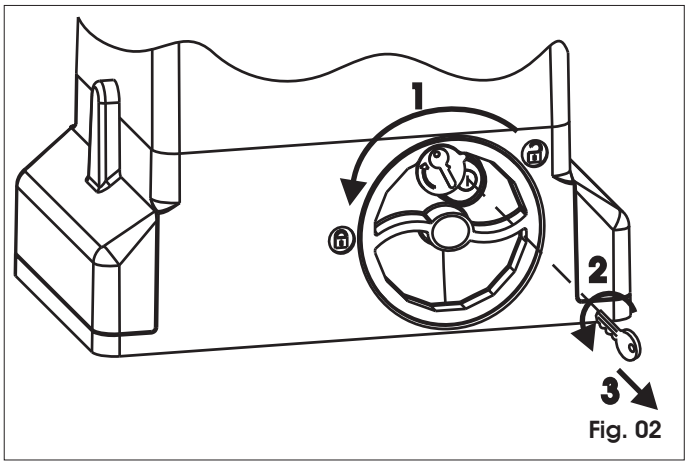

Fig. 02

ENGLISH

AUTOMATED SYSTEM 740-24V

Read the instructions carefully before using the product and keep them for future consultation.

GENERAL SAFETY RULES

If installed and used correctly, the 740-24V automated system will ensure a high degree of safety.

Some simple rules regarding behaviour will avoid any accidental trouble:

- Do not stand near the automated system and do not allow children and other people or things to stand there, especially while it is operating.
- Keep radiocontrols or any other pulse generator well away from children to prevent the automated system from being activated involuntarily.
- Do not allow children to play with the automated system.
- Do not willingly obstruct gate movement.
- Prevent any branches or shrubs from interfering with gate movement.
- Keep light signalling systems efficient and clearly visible.
- Do not attempt to activate the gate by hand unless you have released it.
- In the event of malfunctions, release the gate to allow access and wait for qualified technical personnel to do the necessary work.
- After enabling manual operation, switch off the power supply to the system before restoring normal operation.
- Do not make any alterations to the components of the automated system.
- Do not attempt any kind of repair of direct action whatsoever and contact qualified personnel only.
- Call in qualified personnel at least every 6 months to check the efficiency of the automated system, safety devices and earth connection.

DESCRIPTION

The 740-24V automated system is ideal for controlling vehicle access areas of medium transit frequency.

The 740-24V automated system for sliding gates is an electro-mechanical operator transmitting motion to the sliding gate via a rack pinion or chain appropriately coupled to the gate.

Operation of the sliding gate is controlled by an electronic control unit housed inside the operator or in a hermetically sealed outdoor enclosure.

When, with the gate closed, the unit receives an opening command by radio-control or from another suitable device, it activates the motor until the opening position is reached.

If automatic operation was set, the gate re-closes automatically after the selected pause time has elapsed.

If the semi-automatic operation was set, a second pulse must be sent to close the gate again.

An opening pulse during re-closing, always causes movement to be reversed.

A stop pulse (if provided) always stops movement.

The light signalling indicates that the gate is currently moving.

For details on sliding gate behaviour in different function logics, consult the installation technician.

The automated systems include obstacle-detection and/or safety devices (photocells, edges) that prevent the gate from closing when there is an obstacle in the area they protect.

The system ensures mechanical locking when the motor is not operating and, therefore, it is not necessary to install any lock.

Manual opening is, therefore, only possible by using the release system.

The gearmotor does not have a mechanical clutch and, therefore, it is coupled to a unit with an electronic clutch offering the necessary anti-crushing safety if the system is completed with the necessary safety devices.

A convenient manual release with customised key makes it possible to move the gate in the event of a power failure or malfunction.

MANUAL OPERATION

Warning: Cut power to the system to prevent an involuntary pulse from activating the gate during the release manoeuvre

To release the operator proceed as follows:

1) Insert the key provided and turn it clockwise as shown in Fig. 01 ref. 1 and 2.
2) Turn the release system clockwise, until the mechanical stop is reached, Fig. 01 ref. 3.
3) Open and close the gate manually.

RESTORING NORMAL OPERATION

Warning: Cut power to the system to prevent an involuntary pulse from activating the gate during the manoeuvre for restoring normal operation.

To restore normal operation proceed as follows:

1) Turn the release system anti-clockwise, until its stop is reached, Fig. 02 ref. 1.
2) Turn the key anti-clockwise and remove it from the lock, Fig. 02 ref. 2 and 3.
3) Move the gate until the release system meshes (corresponds to gate locking).
4) Power up the system.

MAINTENANCE

To ensure trouble-free operation and a constant safety level, an overall check of the system should be carried out every 6 months. A form for recording routine maintenance operations is enclosed.

REPAIRS

For any repairs, contact the authorised Repair Centres.

AVAILABLE ACCESSORIES

Refer to catalogue for available accessories.