CAME

CE

119AU03EN

UNDERGROUND OPERATOR
FOR SWING GATES

Official Partner
EXPO
MILANO 2015
FEEDING THE PLANET
ENERGY FOR LIFE



Installation manual

FROG MD - FROG MS

English EN

CAUTION!
important personal safety instructions:
READ CAREFULLY!

Foreword

• This product should only be used for the purpose for which it was explicitly designed. Any other use is considered dangerous. CAME Cancelli Automatici S.p.A. is not liable for any damage resulting from improper, wrongful or unreasonable use • Keep these warnings with the installation and use manuals issued with the automation system.

Before installing

(preliminary check: in case of a negative outcome, do not proceed until you have complied with the safety requirements)

• Check that the part you intend to automate is in good mechanical condition, balanced and aligned, and that it opens and closes properly. Make sure that proper mechanical stops are already in place • If the operator will be installed at a height of less than 2.5 m from the ground or other access level, check whether you will need any protections and/or warnings • Any gate leaves fitted with pedestrian entrances onto which you will install an operator must have a blocking mechanism when the gate is in motion • Make sure that the opening of the automated gate is not an entrapment hazard as regards any surrounding fixed parts • Do not mount the operator upside down or onto any elements that may fold under its weight. If needed, add suitable reinforcements at the points where it is secured • Do not install onto gates not on level ground • Check that any lawn watering devices will not wet the operator from the bottom up.

Installation

• Carefully section off the entire site to prevent unauthorised access, especially by minors and children • Be careful when handling operators that weigh more than 20 kg. In such cases, use proper weight handling safety equipment • All opening commands (e.g. buttons, key selector switches, magnetic detectors etc.) must be installed at least 1.85 m from the gate's area of operation perimeter - or where they cannot be reached from the outside of the gate. Also, the direct commands (buttons, touch commands etc.) must be installed at a height of at least 1.5 m and must not be accessible to the public • All 'hold-to-run' commands must be placed where the moving gate leaves, transit areas and driveways are completely visible • If missing, apply a permanent label that shows the position of the release mechanism • Before delivering to the user, check that the system is EN 12453 (impact test) standard compliant. Make sure that the operator has been properly adjusted and that the safety and protection devices as well as the manual release are working properly • Where necessary and in plain sight, apply the Warning Signs (e.g. gate plate)

Special instructions and advice for users

• Keep the gate's area of operation clean and clear of any obstacles. Check that there is no vegetation in the area of operation of the photocells and that there are no obstacles in the area of operation of the operator • Do not allow children to play with the fixed command devices, or in the gate's area of operation. Keep any remote control devices (i.e. transmitters) or any control devices away from children as well, to prevent the operator from being activated accidentally •The operator is not designed to be used by persons (including children) whose physical, sensorial or mental capacities are limited, or who are lacking in experience or knowledge, unless said persons can be supervised or given instructions regarding using the operator by a person responsible for their safety • Frequently check the system, to see whether any anomalies or signs of wear and tear appear on the moving parts, on the component parts, on the securing points, on the cables and any accessible connections. Keep any joints (i.e. hinges) lubricated and clean, and do the same where friction may occur (i.e. slide rails) • Perform functional tests on photocells and sensitive edges every six months. To check that the photocells work, pass an object in front of them during closing. If the operator reverses the direction of movement or comes to a halt, the photocells work correctly. This is the only maintenance operation that must be carried out while the operator is live. Ensure that the glass on the photocells is kept clean (use a cloth slightly moistened with water; do not use solvents or any other chemicals as these could damage the devices) • If the system requires repairs or modifications, release the operator and do not use it until safety conditions have been restored • Cut off the power supply before releasing the operator for manual openings and before any other operation, to prevent dangerous situations. Read the instructions • If the power cable is damaged, it must be replaced by the manufacturer or the technical assistance service or by a person with a similar qualification so as to prevent any risks • It is STRICTLY FORBIDDEN for users to perform OPERATIONS THEY ARE NOT EXPLICITLY REQUIRED AND ASKED to do in the manuals. For repairs, adjustments and extraordinary maintenance, CONTACT THE SPECIALIST TECHNICAL SERVICE CENTRE • On the periodic maintenance log, note down the checks you have done.

Special instructions and advice for all

• Avoid working near the hinges or moving mechanical parts • Stay clear of the gate's area of operation when in motion • Do not resist the direction of movement of the gate; this may present a safety hazard • At all times be extremely careful about dangerous points that must be indicated by proper pictograms and/or black and yellow stripes • When using a selector or command in 'hold-to-run' mode, keep checking that there are no people in the area of operation of the moving parts. Do this until you release the command • The gate may move at any time without warning • Always cut the power when cleaning or performing maintenance.

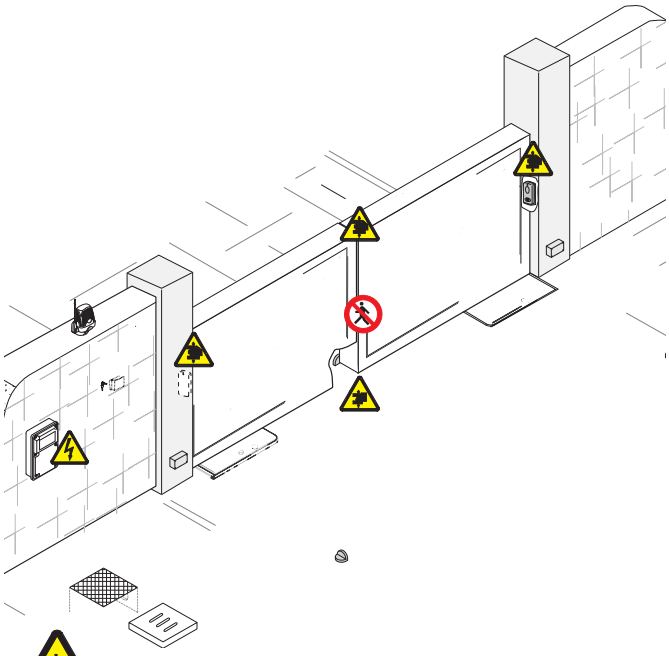

Danger of hand crushing

Danger - live parts

No transit during the manoeuvre

 © CAME cancelli automatici S.p.A. - The data and information provided in this manual are subject to change at any time without prior notice by CAME Cancelli Automatici S.p.A.

LEGEND

🕮 This symbol indicates parts to read carefully.
⚠ This symbol indicates parts about safety.
☞ This symbol tells you what to say to the end users.

REGULATORY REFERENCES

Came Cancelli Automatici is a company with an ISO 9001-certified company quality management system and an ISO 14001-certified environmental management system.
The product complies with the regulations referred to in the declaration of conformity.

DESCRIPTION

This product has been designed and built by CAME CANCELLI AUTOMATICI S.p.A. in compliance with applicable safety standards. The operator is composed of a foundation box, a gearmotor and a series of arms.
The foundation box is made of steel that is 4 mm thick. Inside, there is the gearmotor, consisting of a die cast aluminium gearbox casing with an irreversible worm screw and spiral ring gear system inside, lubricated with SINCAT oil and fitted with a transmission arm.

Intended use

The operator is designed to power swing gates.

🕮 Any installation and operation that differs from what is set out in this manual is prohibited.

Limits of use

Type	FROG MD - FROG MS					
Gate leaf length (m)	< 4	4	5	6	7	8
Gate leaf weight (kg)	1500	1200	1000	800	700	600

With swing gates it is always advisable to install and electro-lock. This is to ensure a reliable closing and to protect the gearmotor's inner workings.
But whereas with reversible operators it is merely advisable, with irreversible ones, beyond 2.5 m, it is obligatory.

Technical data

Type	FROG MD - FROG MS
Motor power supply (V - 50/60 Hz)	230/400 AC
Power supply (V - 50/60 Hz)	230/400 AC
Power (W)	600
Power draw (A)	2.5 max.
Torque (Nm)	1000 max.
Opening time to 95° (sec)	45
Gear ratio	1/1800
rpm	0.35
Duty cycle	50%
Protection rating (IP)	67
Insulation class	II
Operating temperature (°C)	-20 - +55
Weight (kg)	89,36

Packing list

1. Gearmotor
2. UNI5588 M12 nuts
3. Crow's-foot spanner
4. Installation manual

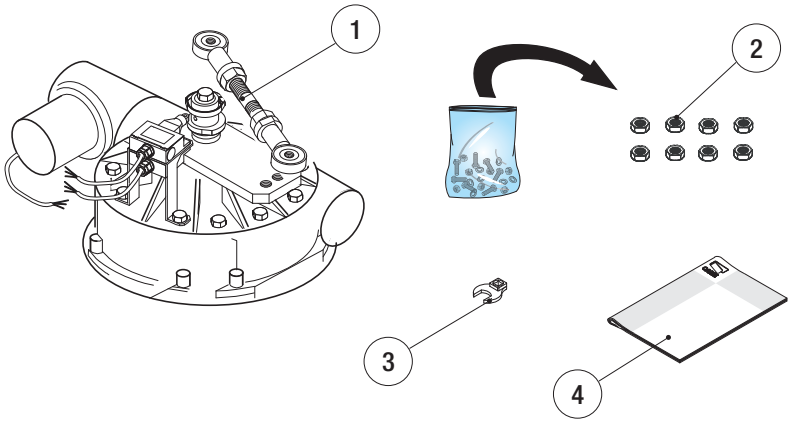

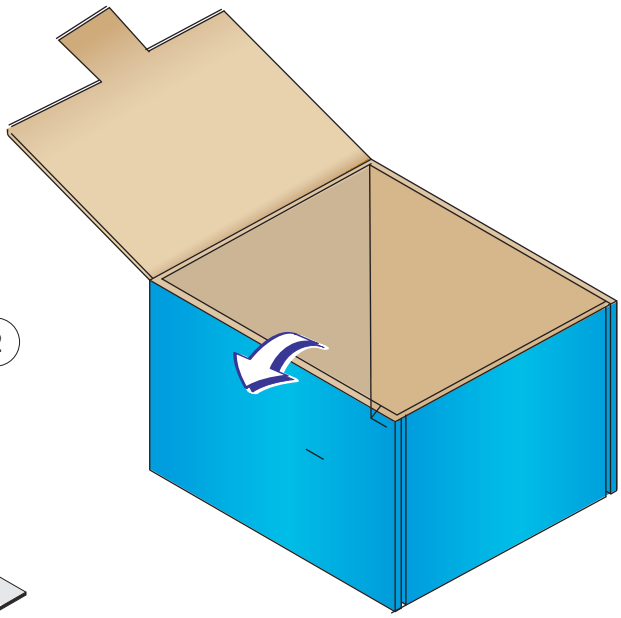

 © CAME cancelli automatici S.p.A. - The data and information provided in this manual are subject to change at any time without prior notice by CAME Cancelli Automatici S.p.A.

Description of the components

1. Tie rod
2. Motor arm
3. Gearmotor
4. Cover
5. Foundation box
6. Upper arm
7. Arm unit
8. Brass
9. Casing hole cover
10. Mechanical stop
11. Limit switch

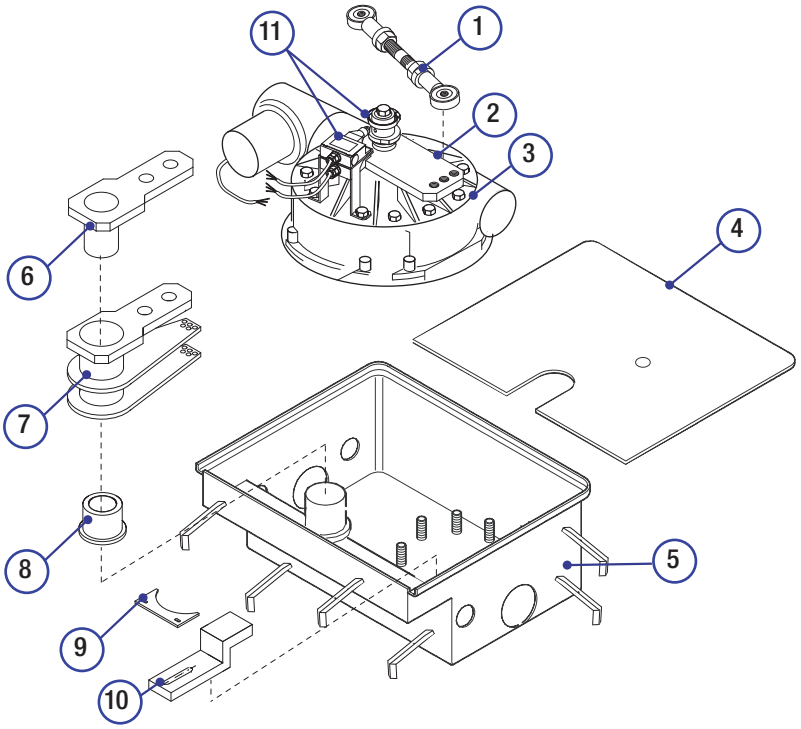

Dimensions (mm)

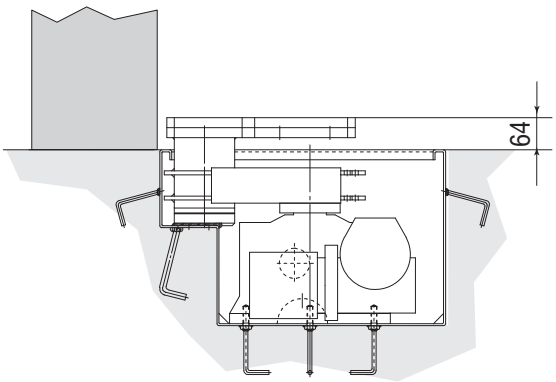

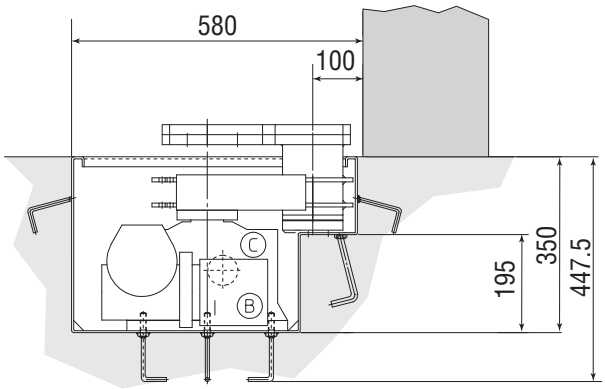

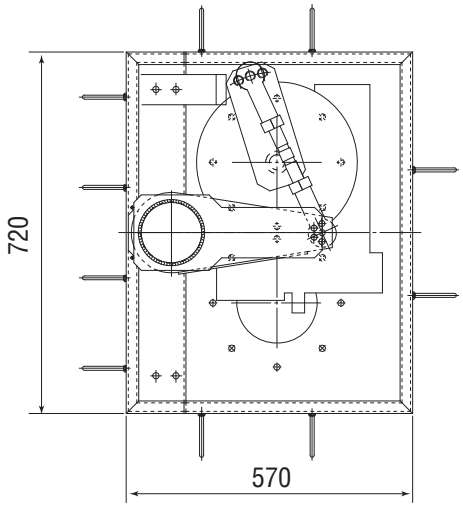

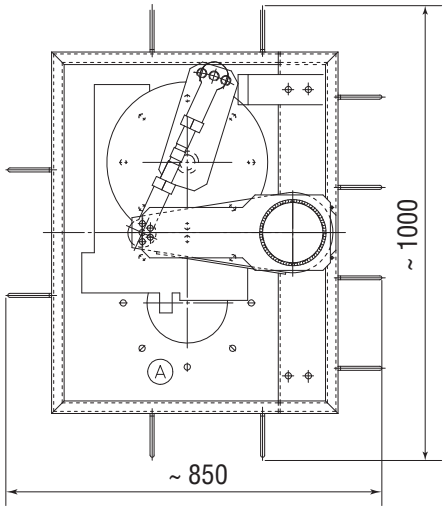

 © CAME cancelli automatici S.p.A. - The data and information provided in this manual are subject to change at any time without prior notice by CAME Cancelli Automatici S.p.A.

GENERAL INSTALLATION INSTRUCTIONS

⚠ Installation must be carried out by qualified and experienced personnel in compliance with applicable regulations.

Preliminary checks

⚠ Before installing the operator:

- Provide a suitable single-pole disconnection device, with a maximum of 3 mm between the contacts, to disconnect the power supply;
- Prepare suitable piping and ducts for routing the electrical cables, ensuring protection against mechanical damage;
- Prepare a drain pipe to prevent stagnation that may cause oxidation;
- ⏚ Make sure that any connections within the container (made to ensure the continuity of the protection circuit) are fitted with additional insulation compared to the other internal conductor parts;
- Make sure the gate structure is sturdy enough, that the hinges are in proper working order and that there is no friction between the moving and fixed parts;
- Make sure there are opening and closing mechanical stops.

Tools and materials

Make sure you have all the tools and materials you will need for the installation at hand to work in total safety and compliance with current standards and regulations. The figure shows some examples of installer's tools.

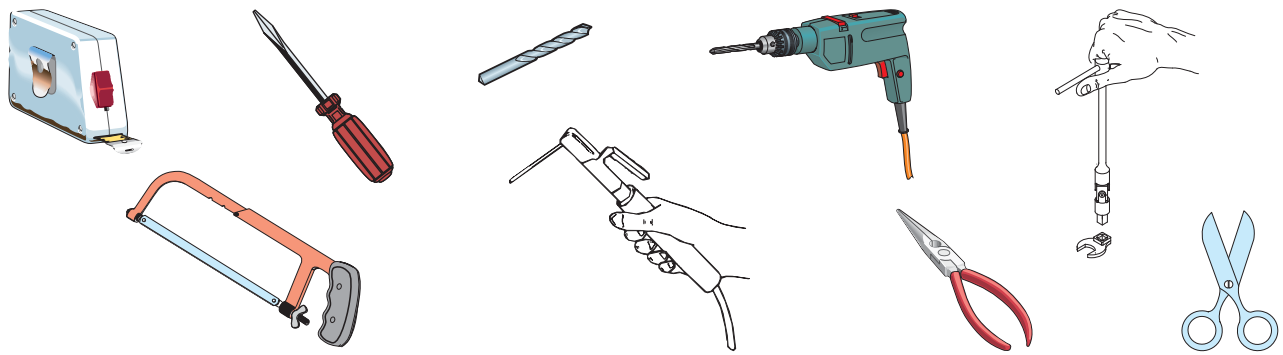

Types of cables and minimum thicknesses

Connection	Cable type	Cable length 1 < 10 m	Cable length 10 < 20 m	Cable length 20 < 30 m
Board power supply 230/400 V 3P	FROR CEI 20-22 IEC EN 50267-2-1	4G x 1.5 mm^2	4G x 2.5 mm^2	4G x 4 mm^2
Motor power supply 230/400V 3P		4G x 1 mm^2	4G x 1.5 mm^2	4G x 2.5 mm^2
Flashing light		2 x 0.5 mm^2	2 x 1 mm^2	2 x 1.5 mm^2
Photocell transmitters		2 x 0.5 mm^2	2 x 0.5 mm^2	2 x 0.5 mm^2
Photocell receivers		4 x 0.5 mm^2	4 x 0.5 mm^2	4 x 0.5 mm^2
Control and safety devices		2 x 0.5 mm^2	2 x 0.5 mm^2	2 x 0.5 mm^2
Limit switch connection		4 x 0.5 mm^2	4 x 0.5 mm^2	4 x 0.5 mm^2
Antenna connection	RG58	max. 10 m		

N.B.: If the cables differ in length compared to what is shown in the table, the cable cross-section is determined according to the actual current draw of the devices connected and according to the provisions of the IEC EN 60204-1 standard.
For connections that require several, sequential loads, the sizes given on the table must be re-evaluated based on actual power draw and distances. When connecting products that are not specified in this manual, please refer to the documentation provided with said products.

 © CAME cancelli automatici S.p.A. - The data and information provided in this manual are subject to change at any time without prior notice by CAME Cancelli Automatici S.p.A.

Example of a system

1. Right-hand gearmotor with foundation box
2. Left-hand gearmotor with foundation box
3. Junction box
4. Control panel
5. Antenna
6. Flashing light
7. Key selector
8. Photocells
9. Inspection chamber
10. Drainage chamber
11. Mechanical stops

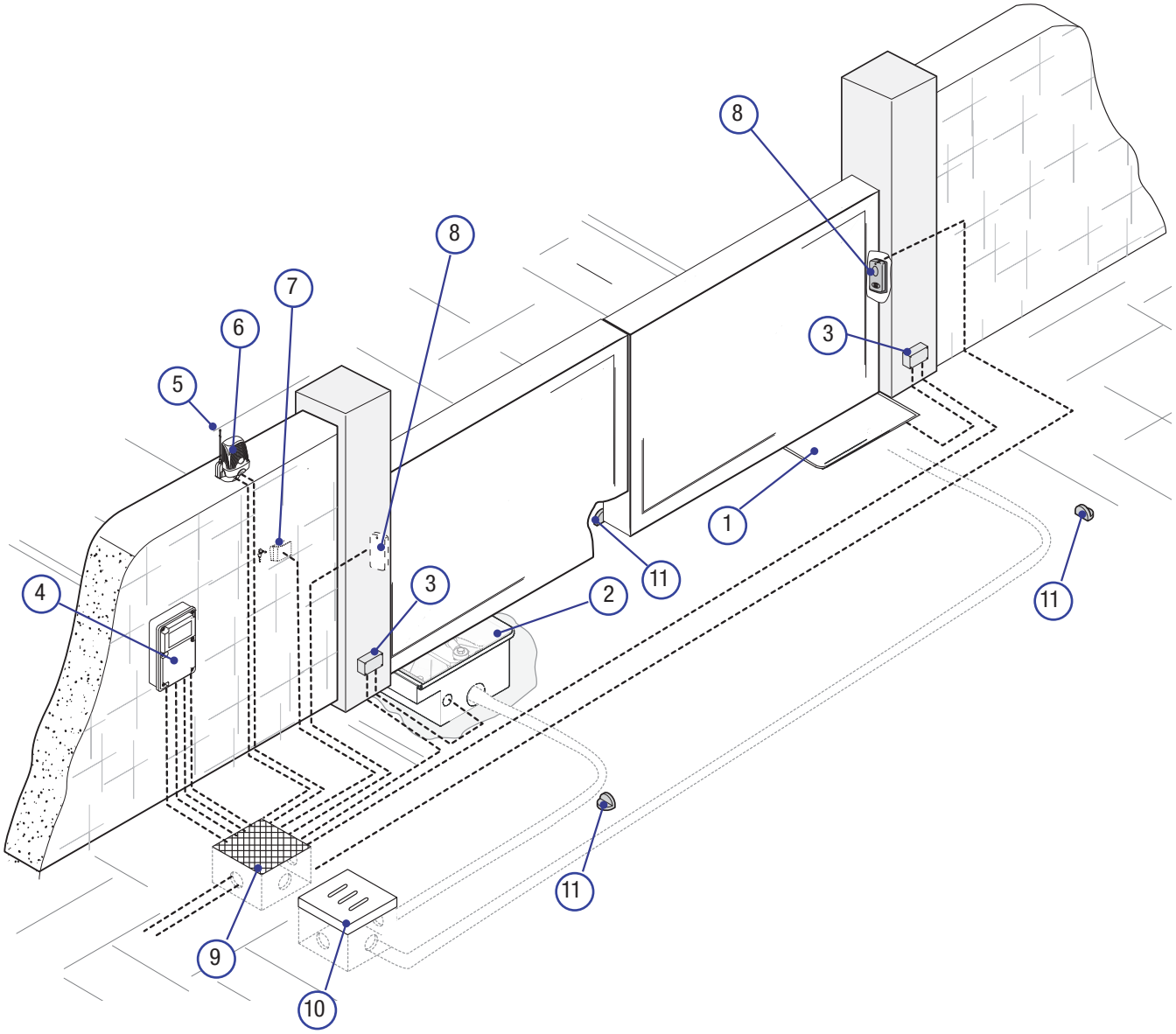

 © CAME cancelli automatici S.p.A. - The data and information provided in this manual are subject to change at any time without prior notice by CAME Cancelli Automatici S.p.A.

INSTALLATION

⚠ The following illustrations are only examples, given that the space for securing the operator and accessories varies depending on the overall dimensions. The installation technician is responsible for choosing the most suitable solution.
⚠ Caution! Use lifting equipment to transport and position the foundation box.
N.B. the figures below illustrate the installation of the right-hand foundation box.

Laying the corrugated pipes and inspection chambers

Make the hole for the box.
Prepare the junction boxes and corrugated pipes necessary for connection to the inspection chamber and the drain pipe.
N.B. the number of tubes depends on the type of system installed and any accessories.

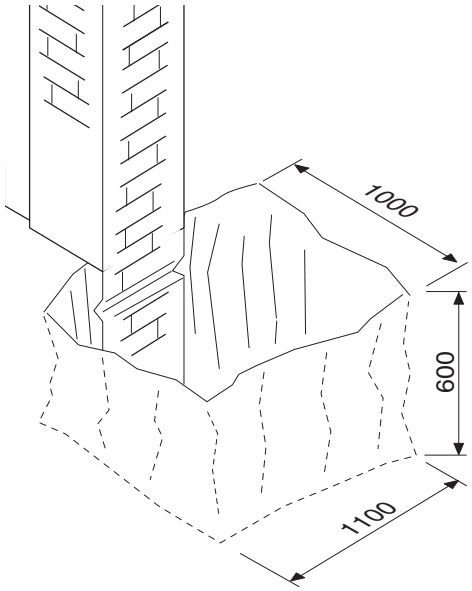

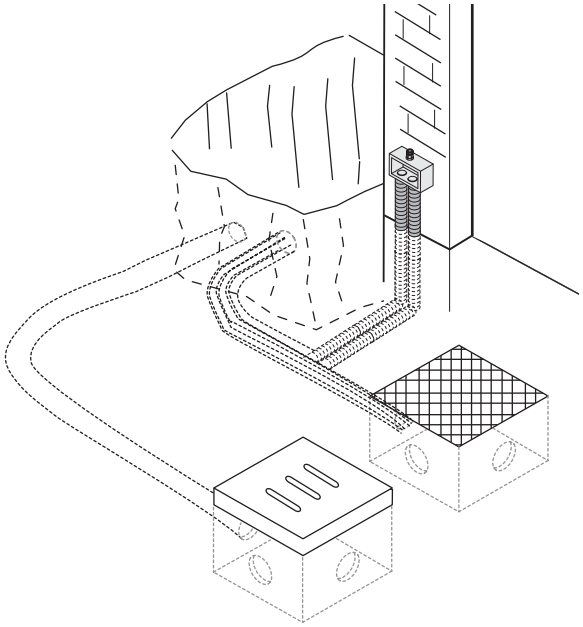

Installing the foundation box

Lean the box against the pillar making sure that the corrugated pipes and the drain pipe pass through the designated holes.
Fill the hole with concrete.
Position the box level with the ground and place the pin in line with the upper gate hinge. Leave to solidify for at least 24 hours.
Clean any remaining concrete from inside the box.

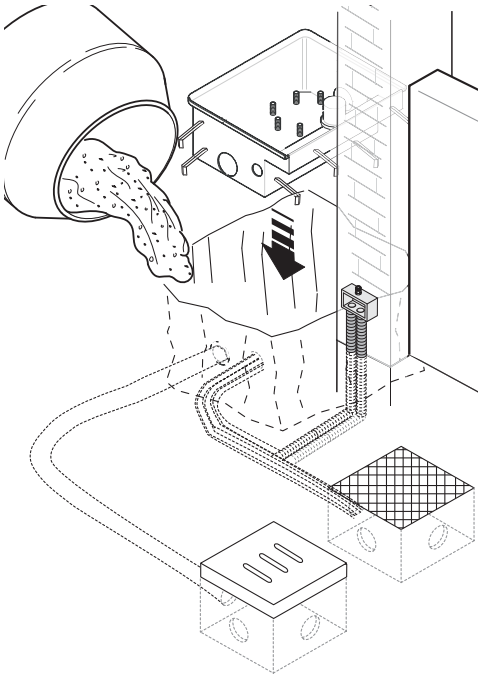

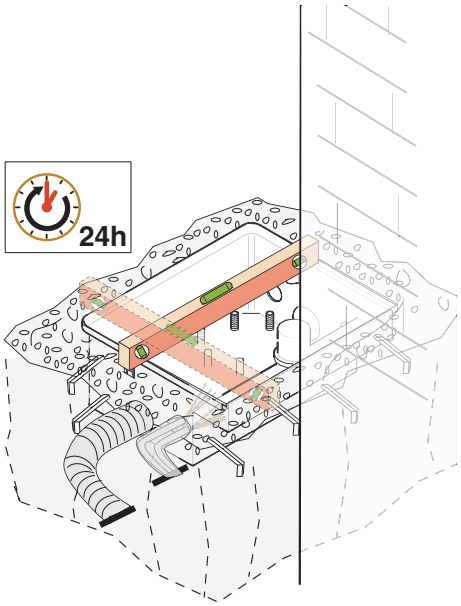

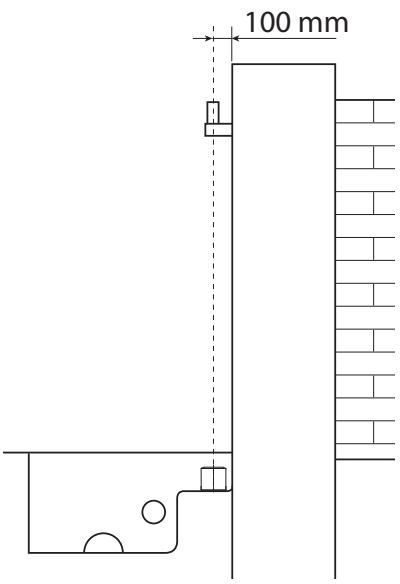

 © CAME cancelli automatici S.p.A. - The data and information provided in this manual are subject to change at any time without prior notice by CAME Cancelli Automatici S.p.A.

Lubricate the box pin, the brass, the arm unit and the upper arm. Assemble everything as shown in the drawing.

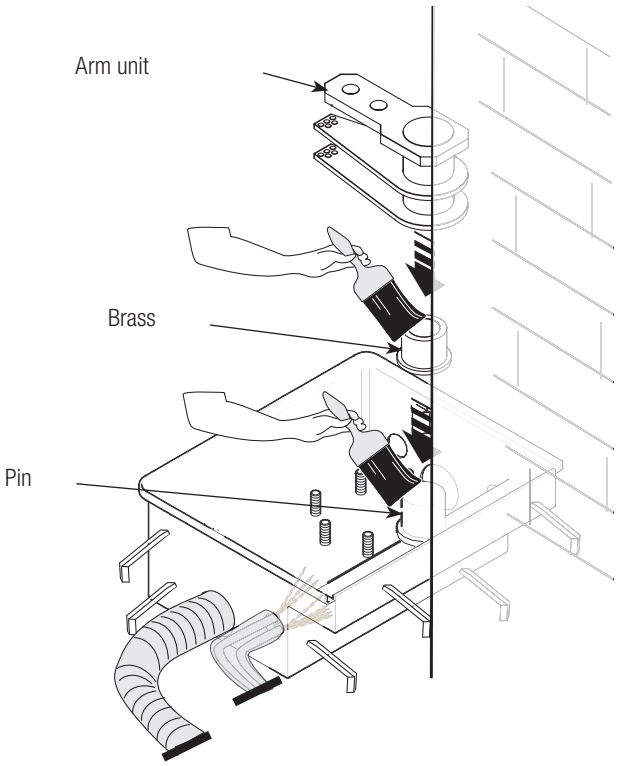

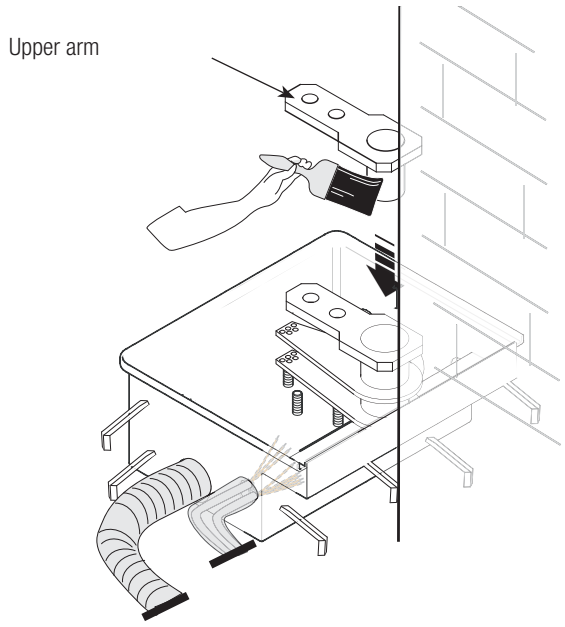

Install the gate leaf, inserting the upper hinge.
Check that the leaf opens and closes without difficulty.
Secure using suitable screws or weld the leaf carefully to the upper arm.

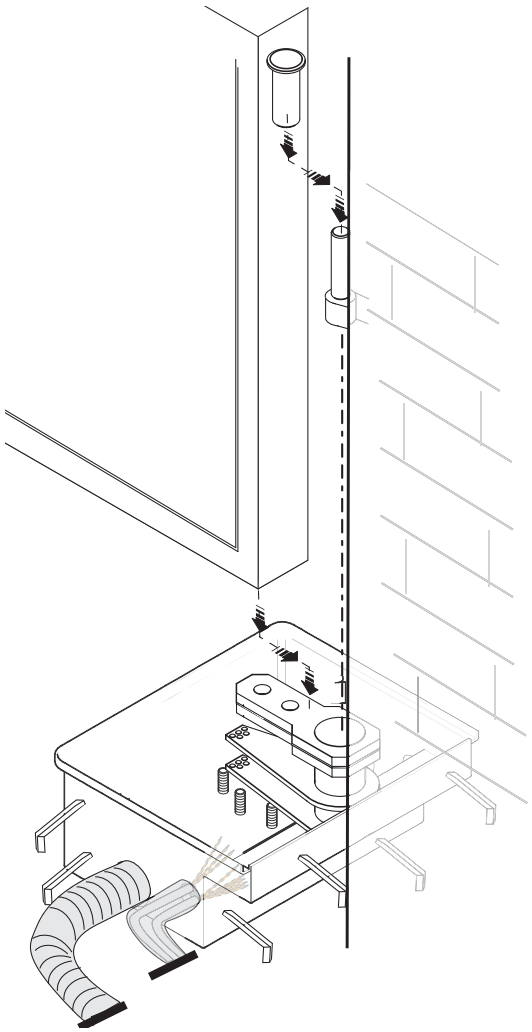

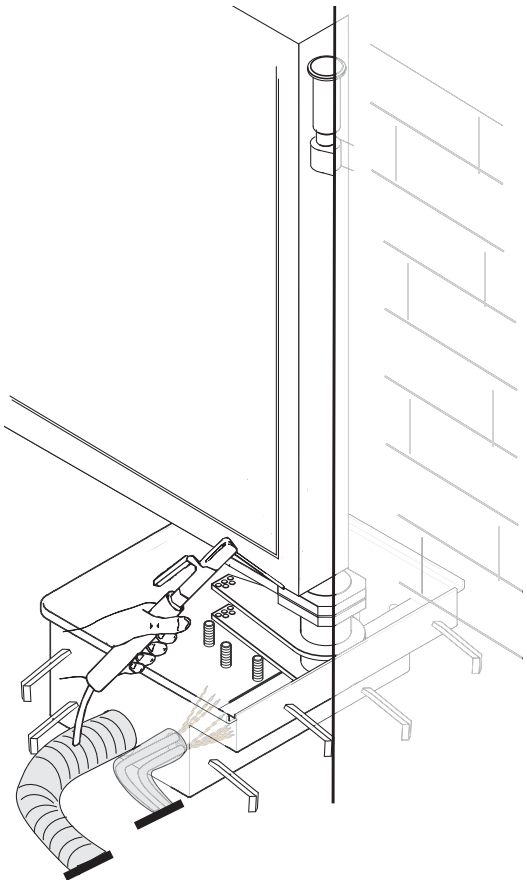

 © CAME cancelli automatici S.p.A. - The data and information provided in this manual are subject to change at any time without prior notice by CAME Cancelli Automatici S.p.A.

Securing the gearmotor

N.B. the figures below are shown from the outside to make the stages of assembling the right-hand gearmotor more intuitive.
Insert the gearmotor in the foundation box and secure with nuts using the crow's-foot spanner supplied and a ratchet wrench (not supplied).

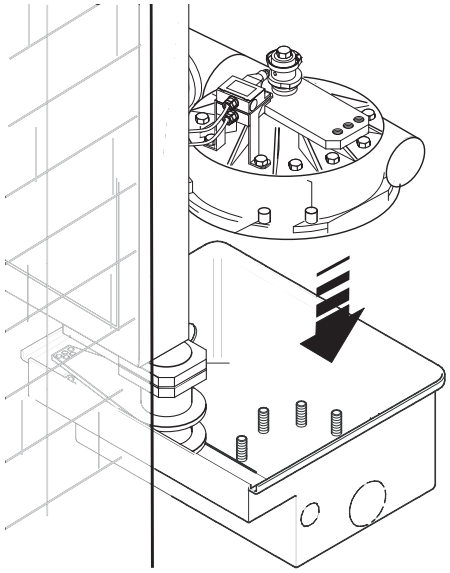

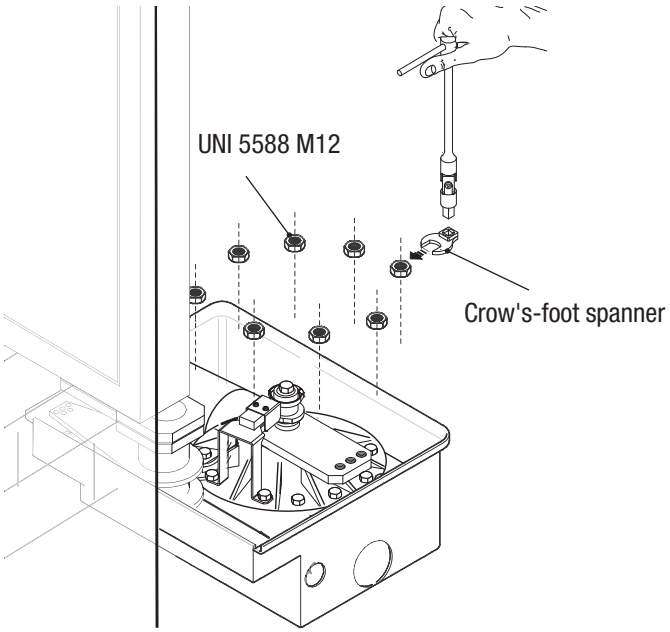

Secure the tie rod between the motor arm and the arm unit in the prepared holes using nuts and bolts.

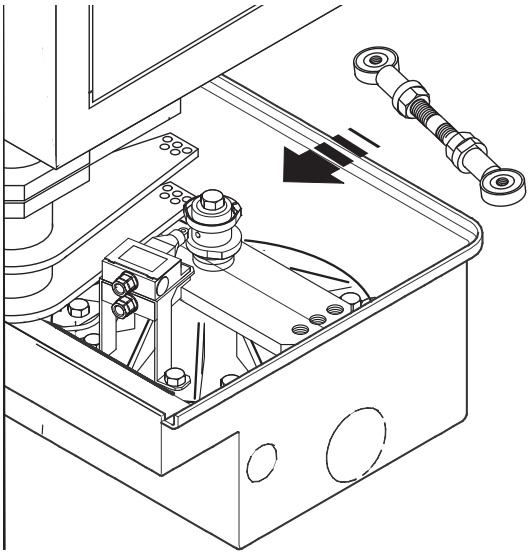

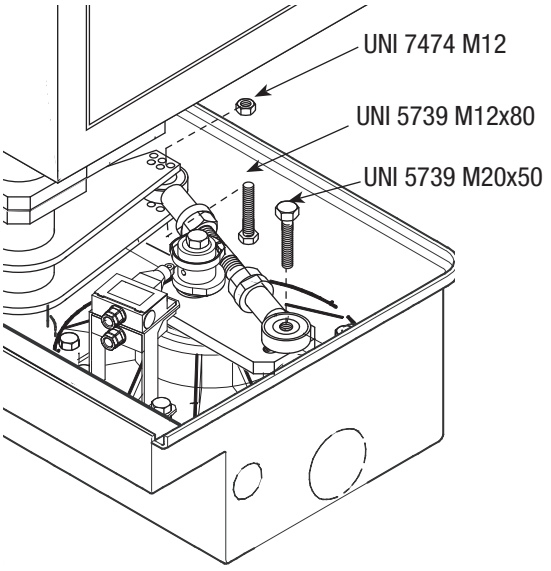

N.B. the arms have several holes in order to obtain various opening angles for the leaves.

90° OPENING

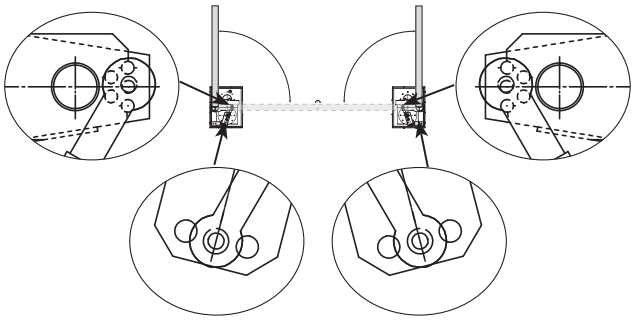

95° OPENING

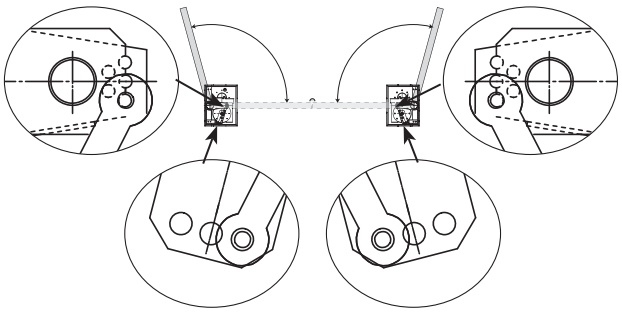

 © CAME cancelli automatici S.p.A. - The data and information provided in this manual are subject to change at any time without prior notice by CAME Cancelli Automatici S.p.A.

Manual release of the gearmotor

Remove the cap, unscrew the arm/motor unit in an anti-clockwise direction to move the leaf manually.

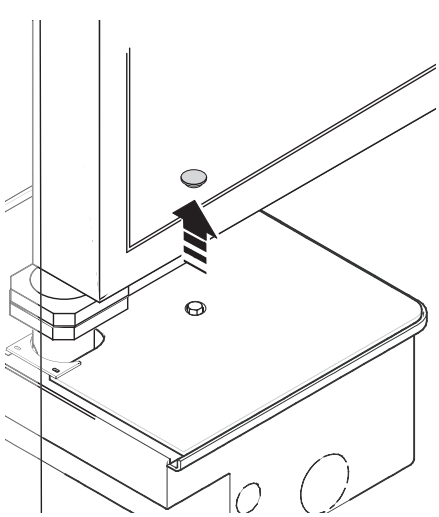

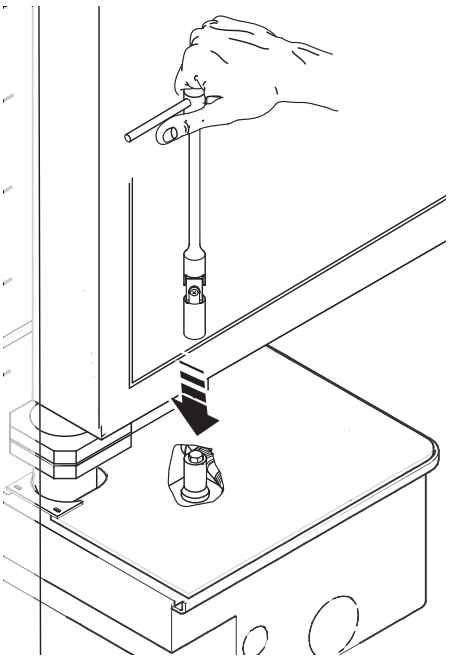

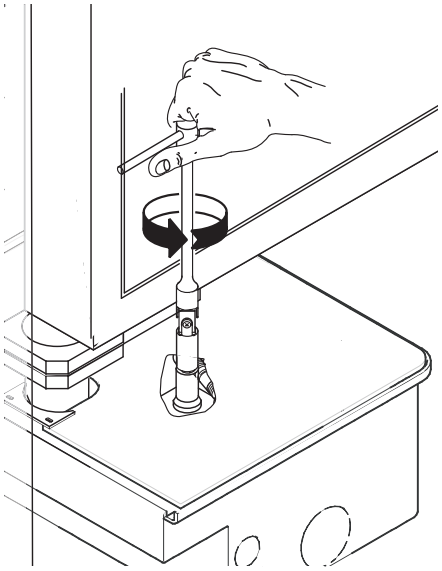

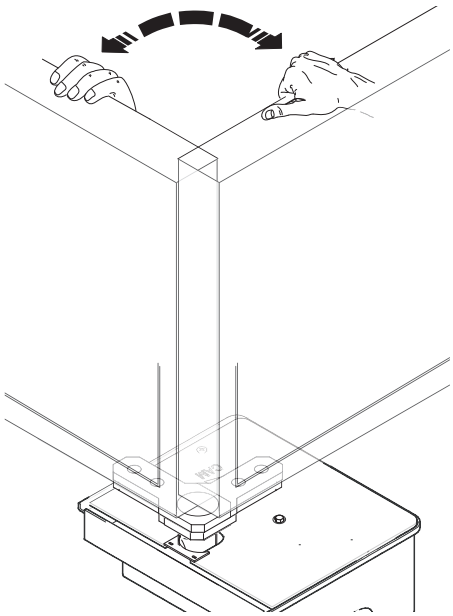

Adjusting the mechanical stop

Before determining the end run points, release the gearmotor, close the leaf manually and adjust the mechanical stop, bringing it to the end of its run with the motor arm. Secure the nuts.

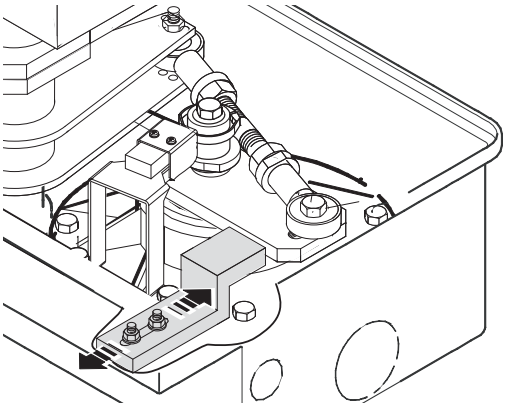

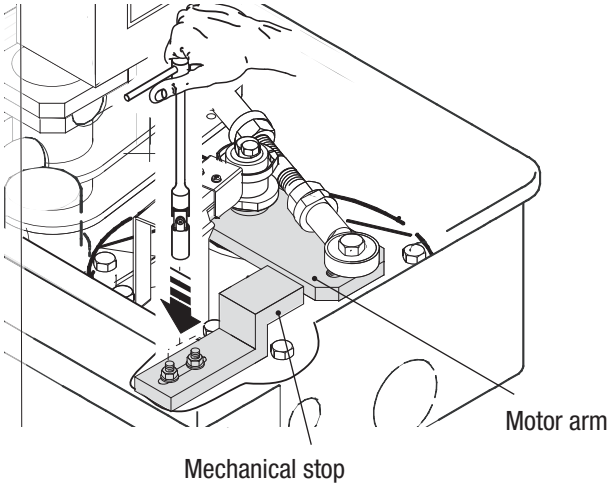

 © CAME cancelli automatici S.p.A. - The data and information provided in this manual are subject to change at any time without prior notice by CAME Cancelli Automatici S.p.A.

Determining the end run points

During opening:
- open the leaves completely;
- rotate the left-hand gearmotor cam in a clockwise direction until the microswitch is inserted;
- rotate the right-hand gearmotor cam in an anti-clockwise direction until the microswitch is inserted.

Opening end run cam on the gearmotor installed on the left "viewed from inside"

Opening end run cam on the gearmotor installed on the right "viewed from inside"

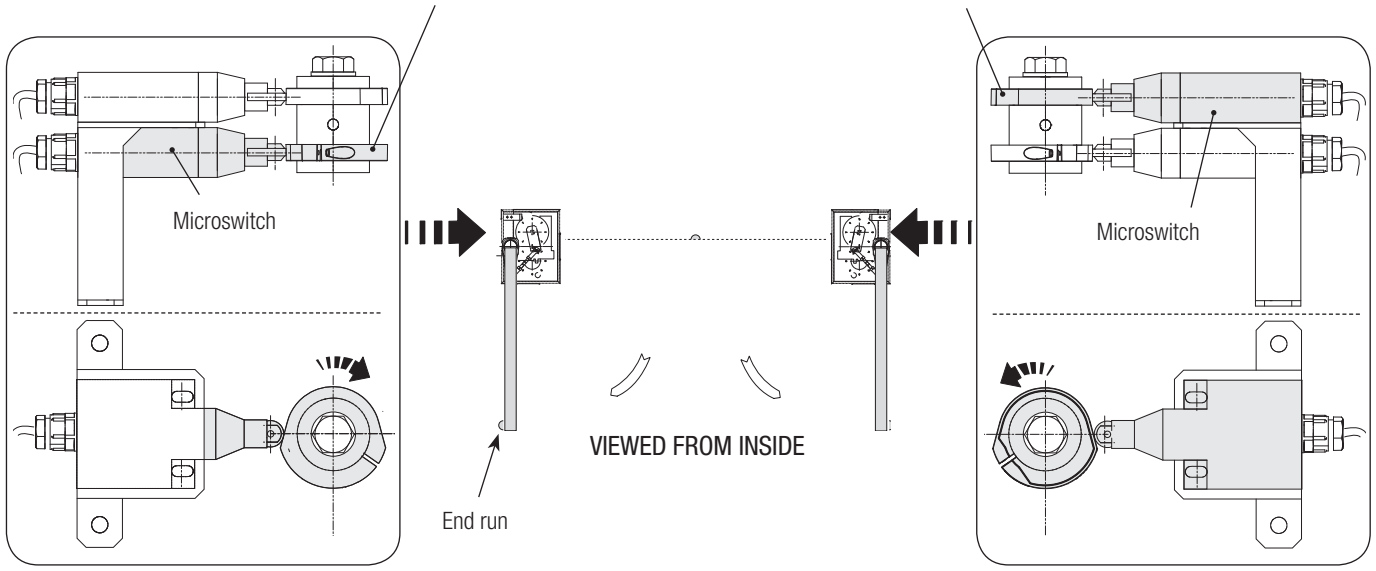

During closing:
- close the leaves completely;
- rotate the left-hand gearmotor cam in an anti-clockwise direction until the microswitch is inserted;
- rotate the right-hand gearmotor cam in a clockwise direction until the microswitch is inserted.

Closing end run cam on the gearmotor installed on the left "viewed from inside"

Closing end run cam on the gearmotor installed on the right "viewed from inside"

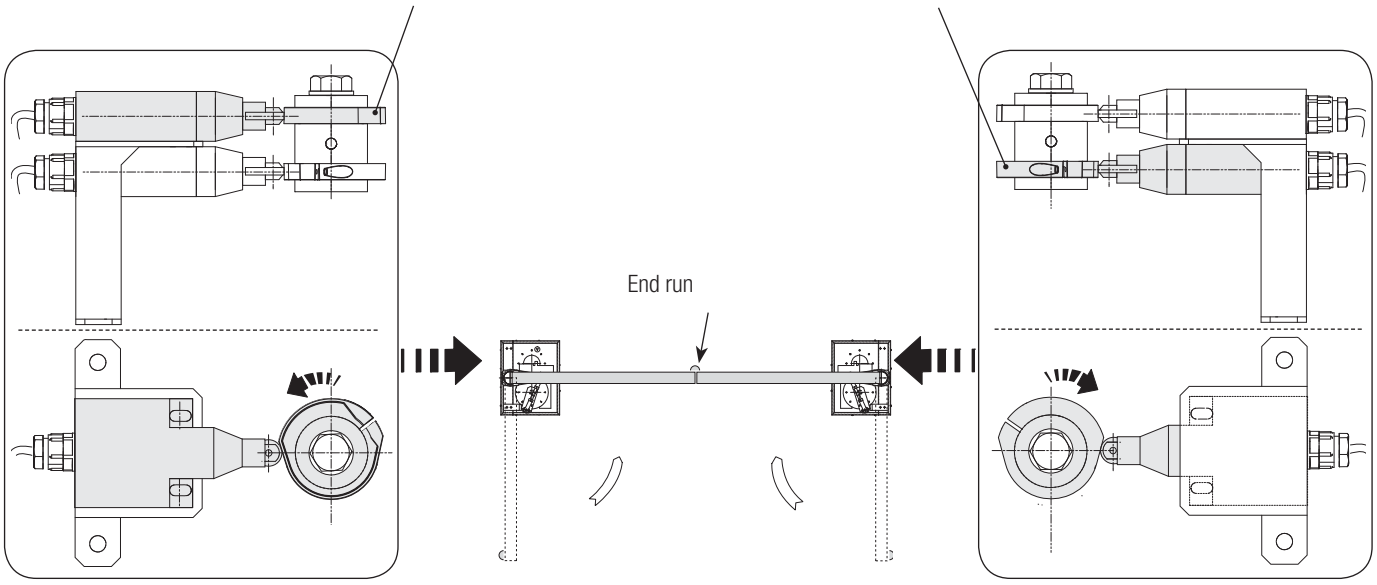

 © CAME cancelli automatici S.p.A. - The data and information provided in this manual are subject to change at any time without prior notice by CAME Cancelli Automatici S.p.A.

Three-phase 400 V power supply

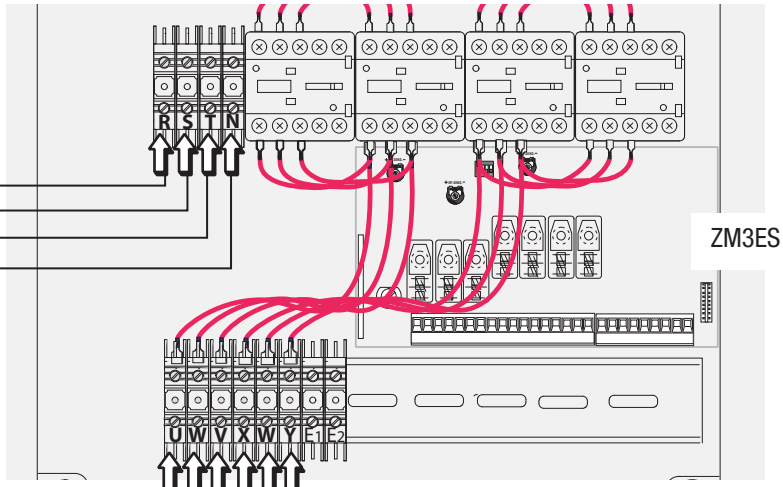

ZM3ES control panel



Three-phase 400 VAC - 50/60 Hz power supply

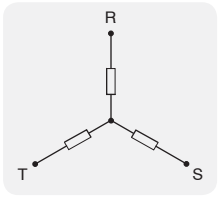

Star connection

BROWN
BLACK
BLUE

BROWN
BLACK
BLUE

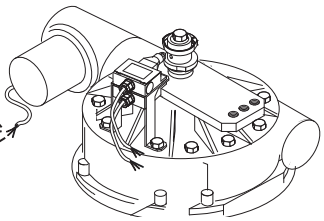

Delayed opening gearmotor connection

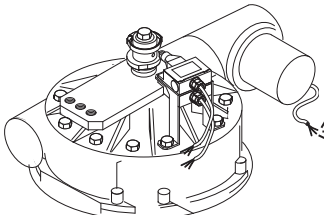

Delayed closing gearmotor connection

Three-phase 230 V power supply

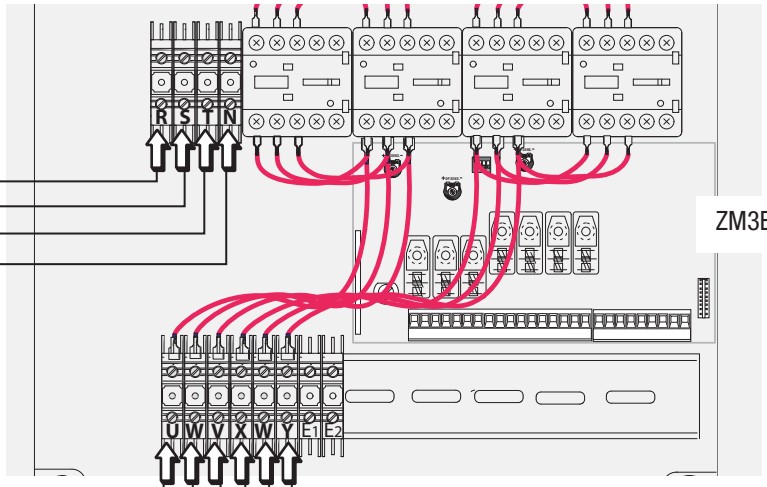

ZM3ES control panel



Three-phase 230 VAC - 50/60 Hz power supply

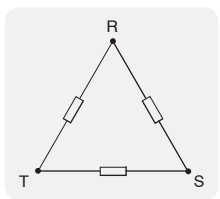

Delta connection

Delayed opening gearmotor connection

BLUE
BLACK
BROWN

BLUE
BLACK
BROWN

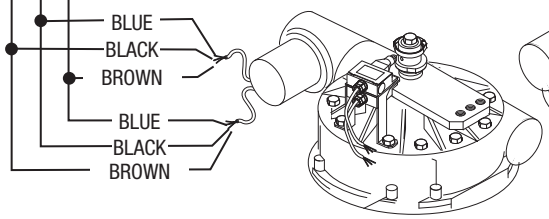

BLACK
BLUE
BROWN

BLACK
BLUE
BROWN

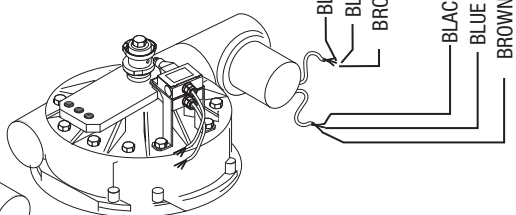

Delayed closing gearmotor connection

 © CAME cancelli automatici S.p.A. - The data and information provided in this manual are subject to change at any time without prior notice by CAME Cancelli Automatici S.p.A.

1) Connecting the open end run to the delayed opening gearmotor.

3) Connecting the close end run to the delayed closing gearmotor.

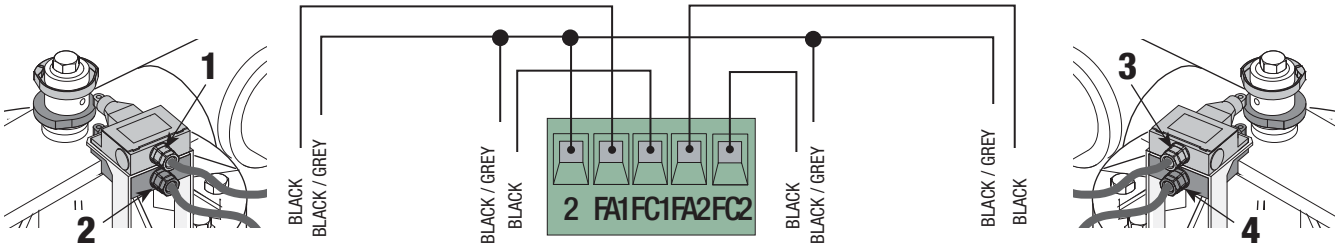

2) Connecting the close end run to the delayed opening gearmotor.

4) Connecting the open end run to the delayed closing gearmotor.

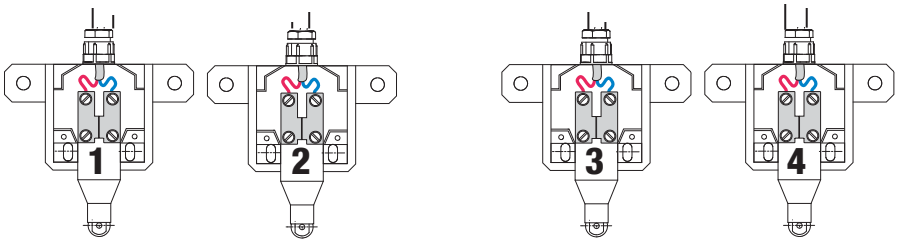

🕮 On the control panel, select and confirm <end stop> from the Configuration feature.

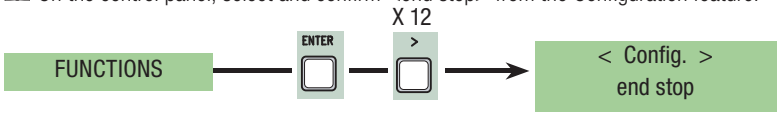

Make sure that the <end stop> feature is configured to N.C.

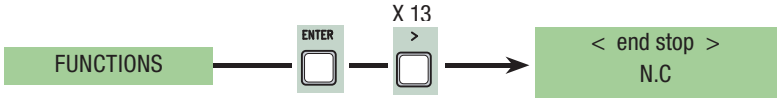

FINAL OPERATIONS

Securing the cover

Rest the cover on the foundation box, secure the hole cover and insert the cap on the cover.

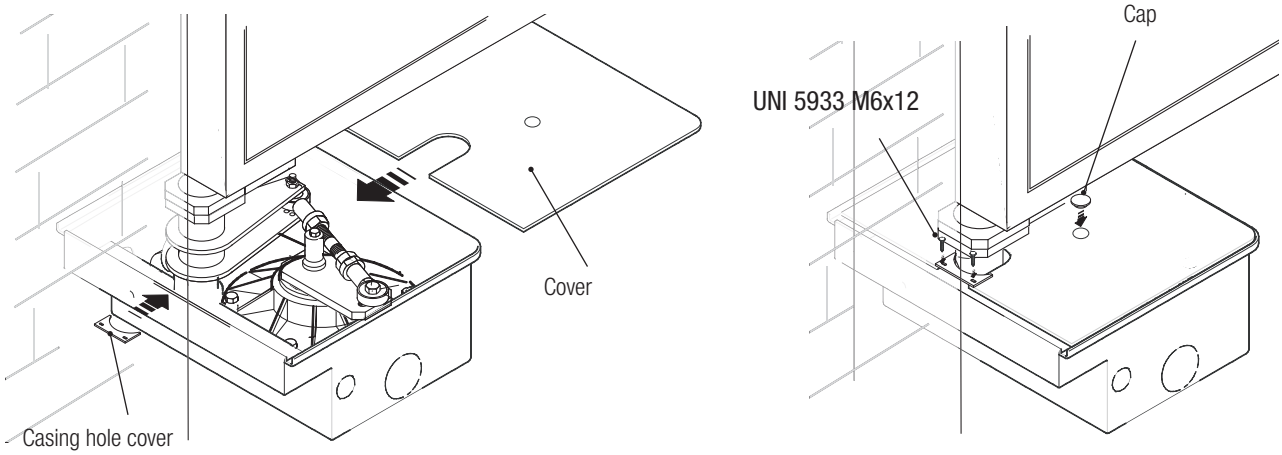

MAINTENANCE

☞Before any maintenance, disconnect power to prevent any possible dangerous situations that can be caused by accidental movement of the operator.
Lubricate the pivot points with grease whenever abnormal vibrations or squeaking occurs, as shown below.

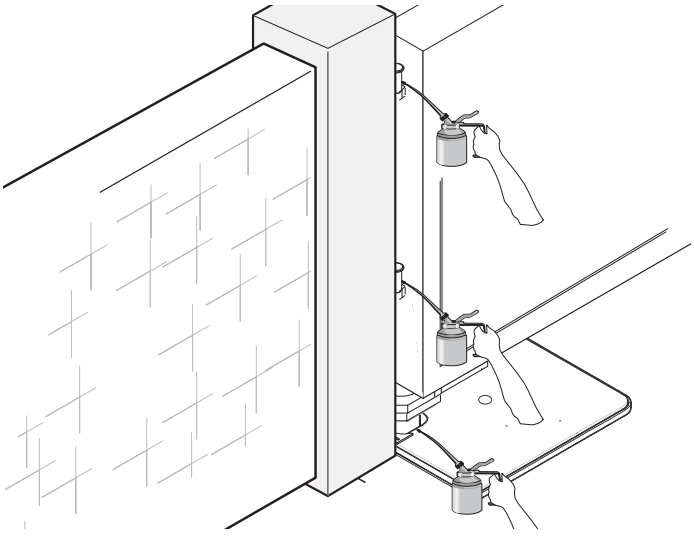

 © CAME cancelli automatici S.p.A. - The data and information provided in this manual are subject to change at any time without prior notice by CAME Cancelli Automatici S.p.A.

Periodic maintenance

Periodic maintenance log to be completed by the user (every six months)

Date	Notes	Signature

Extraordinary maintenance

⚠The table below is used to note any extraordinary maintenance, repairs or improvements carried out by specialist companies.
⚠ Extraordinary maintenance must be carried out by specialist technicians.

Extraordinary maintenance log

Installation technician stamp	Operator name
	Date of intervention
	Technician signature
	Customer signature
Intervention carried out _____	

Installation technician stamp	Operator name
	Date of intervention
	Technician signature
	Customer signature
Intervention carried out _____	

Installation technician stamp	Operator name
	Date of intervention
	Technician signature
	Customer signature
Intervention carried out _____	

 © CAME cancelli automatici S.p.A. - The data and information provided in this manual are subject to change at any time without prior notice by CAME Cancelli Automatici S.p.A.

Installation technician stamp	Operator name
	Date of intervention
	Technician signature
	Customer signature
Intervention carried out _____	

Installation technician stamp	Operator name
	Date of intervention
	Technician signature
	Customer signature
Intervention carried out _____	

TROUBLESHOOTING

MALFUNCTIONS	POSSIBLE CAUSES	CHECKS AND REMEDIES
The gate does not open or close	• No power • The gearmotor is unlocked • The transmitter battery is flat • The transmitter is broken • The stop button is stuck or broken • The opening/closing button or the key selector switch are stuck	• Check for mains power • Lock the gearmotor • Replace the batteries • Contact service • Contact service • Contact service
The gate opens but does not close	• The photocells are engaged	• Make sure that the photocells are clean and work correctly • Contact service

DISMANTLING AND DISPOSAL

☞CAME CANCELLI AUTOMATICI S.p.A. implements an EN ISO 14001 certified and compliant Environmental Management System at its plants, to ensure environmental protection.
Please continue our efforts to protect the environment, something that CAME considers to be one of the foundations in developing its business and market strategies, simply by observing brief recommendations as regards disposal:
♻ DISPOSAL OF PACKAGING
Packaging components (cardboard, plastic etc.) can be disposed of together with normal household waste without any difficulty, by simply separating the different types of waste and recycling them.
Before proceeding, it is always advisable to check specific regulations in force in the place of installation.
DISPOSE OF PROPERLY!
♻ DISPOSAL OF THE PRODUCT
Our products are made with different materials. Most of them (aluminium, plastic, iron, electrical cables) can be disposed of together with normal household waste. They can be recycled if collected, sorted and sent to authorised centres.
Other components (circuit boards, transmitter batteries etc.), on the other hand, may contain pollutants.
They should therefore be removed and handed over to companies authorised to recover and recycle them.
Before proceeding, it is always advisable to check specific regulations in force in the place of disposal.
DISPOSE OF PROPERLY!

DECLARATION OF CONFORMITY

CE Declaration - Came Cancelli Automatici S.p.A. declares that this device complies with the essential requirements and other relevant provisions established in Directives 2006/42/EC and 2004/108/EC.

Reference code for requesting a true copy: DDI B IT A003

 © CAME cancelli automatici S.p.A. - The data and information provided in this manual are subject to change at any time without prior notice by CAME Cancelli Automatici S.p.A.

IT • Per ogni ulteriore informazione su azienda, prodotti e assistenza nella vostra lingua:

EN • For any further information on company, products and assistance in your language:

FR • Pour toute autre information sur la société, les produits et l'assistance dans votre langue :

DE • Weitere Infos über Unternehmen, Produkte und Kundendienst bei:

ES • Por cualquier información sobre la empresa, los productos y asistencia en su idioma:

NL • Voor meer informatie over het bedrijf, de producten en hulp in uw eigen taal:

PT • Para toda e qualquer informação acerca da empresa, de produtos e assistência técnica, em sua língua:

PL • Wszystkie inne informacje dotyczące firmy, produktów oraz usług i pomocy technicznej w Waszym języku znajdują się na stronie:

RU • Для получения дополнительной информации о компании, продукции и сервисной поддержке на вашем языке:

HU • A vállalatra, termékeire és a műszaki szervizre vonatkozó minden további információért az Ön nyelvén:

HR • Za sve dodatne informacije o poduzeću, proizvodima i tehničkoj podršci na vašem jeziku:

UK • Для отримання будь-якої іншої інформації про компанію, продукцію та технічну підтримку:



English *- Manual code:* ***119AU03EN*** *vers.* ***4*** *09/2014 © CAME cancelli automatici S.p.A.*
The data and information provided in this manual are subject to change at any time without prior notice by CAME Cancelli Automatici S.p.A.

CAME

CAMEGROUP

CAME Cancelli Automatici S.p.A.
Via Martiri Della Libertà, 15
31030 **Dosson Di Casier** (Tv)
(+39) 0422 4940
(+39) 0422 4941
Assistenza Tecnica/Numero Verde 800 295830