CAME

119D69EN

Official Partner

EXPO

MILANO 2015

FEEDING THE PLANET
ENERGY FOR LIFE

AUTOMATION
FOR SWING GATES

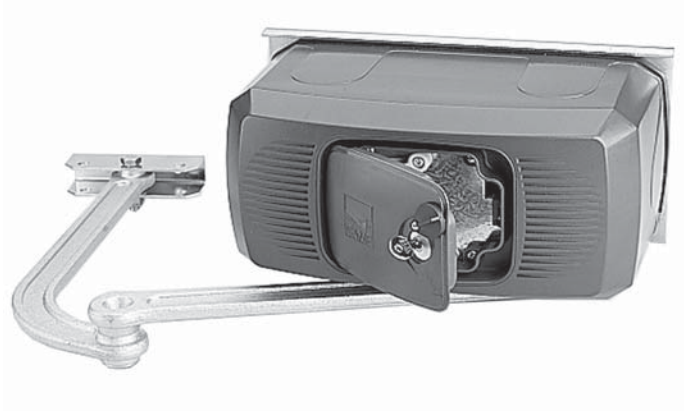

INSTALLATION MANUAL

F1000 - F1100

English EN

ENGLISH

WARNING! important safety instructions for people: READ CAREFULLY!

Premise

• Employ this product only for the use for which it was expressly made. Any other use is dangerous. CAME Cancelli Automatici S.p.A is not liable for any damage caused by improper, wrongful and unreasonable use • Keep these warnings together with the installation and operation manuals that come with the operator.

Before installing

(checking what's there: if your evaluation is negative, do not proceed before having complied with all safety requirements)

• Check that the automated parts are in good mechanical order, that the operator is level and aligned, and that it opens and closes properly. Make sure you have suitable mechanical stops • If the operator is to be installed at a height of over 2.5 m from the ground or other access level, make sure you have any necessary protections and/or warnings in place • If any pedestrian openings are fitted into the operator, there must also be a a system to block their opening while they are moving • Make sure that the opening automated door or gate cannot entrap people against the fixed parts of the operator • Do not install the operator upside down or onto elements that could yield and bend. If necessary, add suitable reinforcements to the anchoring points • Do not install door or gate leaves on tilted surfaces • Make sure any sprinkler systems cannot wet the operator from the ground up • Make sure the temperature range shown on the product literature is suitable to the climate where it will be installed • Follow all instructions as improper installation may result in serious bodily injury • It is important to follow these instructions for the safety of people. Keep these instructions.

Installing

• Suitably section off and demarcate the entire installation site to prevent unauthorized persons from entering the area, especially minors and children • Be careful when handling operators that weigh over 20 kg. If need be, use proper safety hoisting equipment • All opening commands (that is, buttons, key switches, magnetic readers, and so on) must be installed at least 1.85 m from the perimeter of the gate's working area, or where they cannot be reached from outside the gate. Also, any direct commands (buttons, touch panels, and so on) must be installed at least 1.5 m from the ground and must not be reachable by unauthorized persons • All maintained action commands, must be fitted in places from which the moving gate leaves and transit and driving areas are visible • Apply, if missing, a permanent sign showing the position of the release device • Before delivering to the users, make sure the system is EN 12453 standard compliant (regarding impact forces), and also make sure the system has been properly adjusted and that any safety, protection and manual release devices are working properly • Apply Warning Signs (such as the gate's plate) where necessary and in a visible place

Special user-instructions and recommendations

• Keep gate operation areas clean and free of any obstructions. Make sure that the photocells are free of any overgrown vegetation and that the operator's area of operation is free of any obstructions • Do not allow children to play with fixed commands, or to loiter in the gate's maneuvering area. Keep any remote control transmitters or any other command device away from children, to prevent the operator from being accidentally activated. • The apparatus may be used by children of eight years and above and by physically, mentally and sensorially challenged people, or even ones without any experience, provided this happens under close supervision or once they have been properly instructed to use the apparatus safely and about the potential hazards involved. Children must not play with the apparatus. Cleaning and maintenance by users must not be done by children, unless properly supervised • Frequently check the system for any malfunctions or signs of wear and tear or damage to the moving structures, to the component parts, all anchoring points, including cables and any accessible connections. Keep any hinges, moving joints and slide rails properly lubricated • Perform functional checks on the photocells and sensitive safety edges, every six months. To check whether the photocells are working, wave an object in front of them while the gate is closing; if the operator inverts its direction of travel or suddenly stops, the photocells are working properly. This is the only maintenance operation to do with the power on. Constantly clean the photocells' glass covers using a slightly water-moistened cloth; do not use any solvents or other chemical products that may ruin the devices • If repairs or modifications are required to the system, release the operator and do not use it until safety conditions have been restored • Cut off the power supply before releasing the operator for manual openings and before any other operation, to prevent potentially hazardous situations. Read the instructions • If the power supply cable is damaged, it must be replaced by the manufacturer or authorized technical assistance service, or in any case, by similarly qualified persons, to prevent any risk • It is FORBIDDEN for users to perform any OPERATIONS THAT ARE NOT EXPRESSLY REQUIRED OF THEM AND WHICH ARE NOT LISTED in the manuals. For any repairs, modifications and adjustments and for extraordinary maintenance, CALL TECHNICAL ASSISTANCE • Log the job and checks into the periodic maintenance log.

Additional special recommendations for everyone

• Keep away from hinges and mechanical moving parts • Do not enter the operator's area of operation when it is moving • Do not counter the operator's movement as this could result in dangerous situations • Always pay special attention to any dangerous points, which have to be labeled with specific pictograms and/or black and yellow stripes • While using a selector switch or a command in maintained actions, keep checking that there are no persons within the operating range of any moving parts, until the command is released • The gate may move at any time and without warning • Always cut off the power supply before performing any maintenance or cleaning.

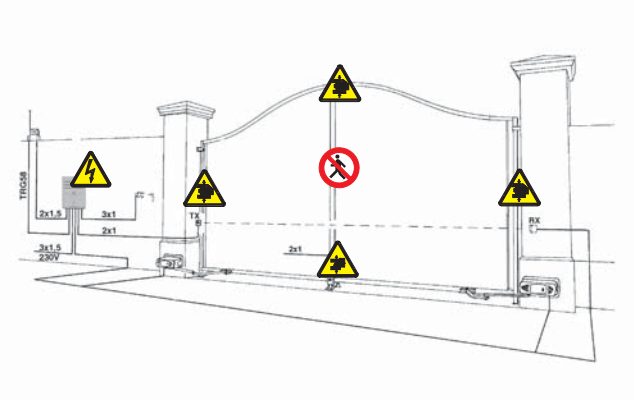

Danger of foot crushing

Danger of hand crushing

Danger! High voltage.

No transiting while maneuvering

 © CAME S.p.A. - The data and information reported in this installation manual are susceptible to change at any time and without obligation on CAME S.p.A. to notify users.

1 Legend of symbols

This symbol tells you to read the section with particular care.

This symbol tells you that the sections concern safety issues.

This symbol tells you what to say to the end-users.

2 Intended use and restrictions

2.1 Intended use

The FERNI 230V operator is specifically engineered to automate residential and condominium swing gates.
The use of this product for purposes other than those described above and installation executed in a manner other than as instructed in this technical manual are prohibited.

2.2 Restrictions

Gate leaf width m	Gate leaf weight kg
2.00	800
2.50	600
3.00	500
3.50	450
4.00	400

Max. angle of gate wing when open: 90°.
We suggest you always fit an electrolock onto swing gates for a more reliable closure.
Fitting electrolocks onto reversible operators makes for anti-intrusion security.
You must install electrolocks onto irreversible operators with gate leaves exceeding 2.5 m.

3 Reference Standards

The company: CAME S.p.A. is ISO 9001 quality certified; is has also obtained the ISO 14001 environmental safeguarding certification. CAME engineers and manufactures all of its products in Italy.
This product complies with the following standards: *see declaration of compliance*.

4 Description

4.1 Gearmotor

This product is engineered and manufactured by CAME S.p.A. and complies with current safety regulations.
The gearmotor is composed of two, cast aluminium half shells inside of which rest the gearmotor and endstops – with electro blocking – and an endless screw, epicycloidal gear reduction system.

4.2 Technical features

Version F1000
Irreversible gearmotor
Motor power supply: 230V a.c. 50/60Hz
Max draw: 1,3A
Power: 150W
Gear ratio: 1/709
Opening time (90°): 18 s
Max. torque: 320 Nm
Duty Cycle: 30%
Protection Rating: IP54
Weight: 14 kg
Operating temperature

Version F1100
Reversible gearmotor
Motor power supply: 230V a.c. 50/60Hz
Max draw: 1A
Power: 110W
Gear ratio: 1/678
Opening time (90°): 18 s
Max. torque: 380 Nm
Duty Cycle: 50%
Protection Rating: IP54
Weight: 13 kg
Operating temperature

ENGLISH

 © CAME S.p.A. - The data and information reported in this installation manual are susceptible to change at any time and without obligation on CAME S.p.A. to notify users.

4.3 Description of parts

1) Base plate
2) Gearmotor assembly
3) Motor cover
4) Articulated transmission arm

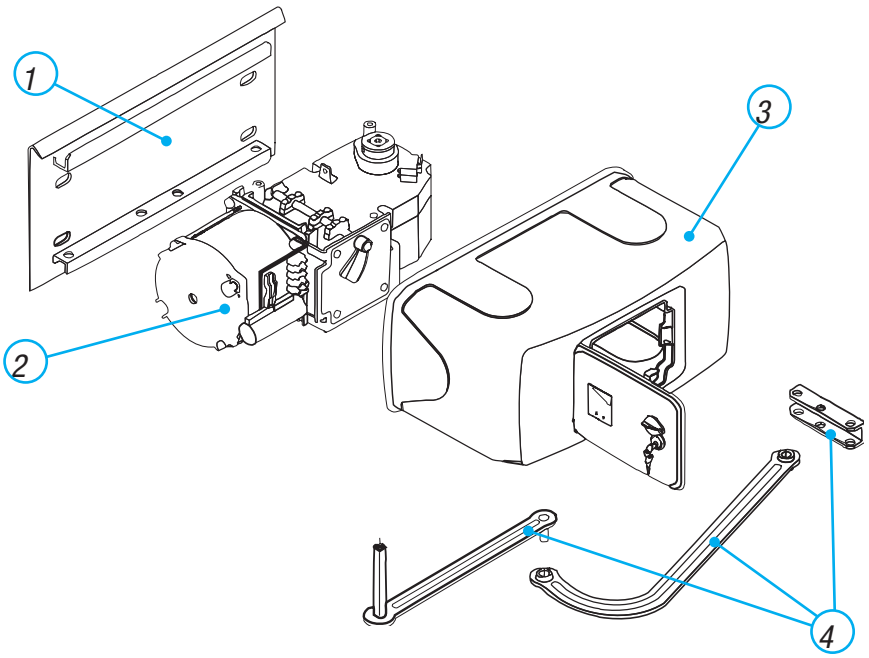

Optional accessory :
F1001 Straight telescopic arm (for single gate wings that are 0,5 to 2 m max long).

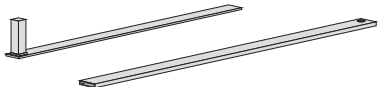

4.4 Overall dimensions

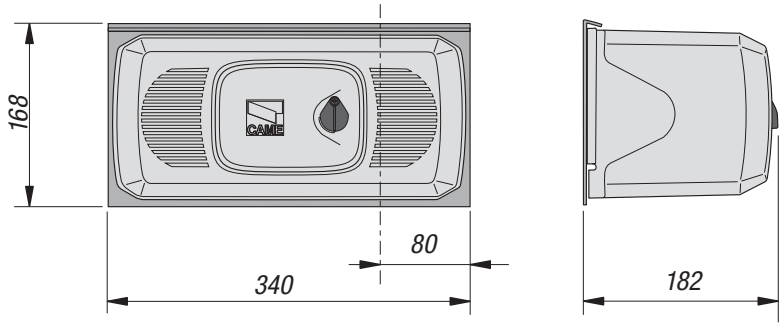

5 Installation

Installation must be carried out by expert qualified personnel and in full compliance with current regulations.

5.1 Preliminary checks

Before installing, do the following:

- **Make sure the structure of the gate is sturdy, the hinges work and that the is no friction between moving and non-moving parts;**
- **Make sure the path of the electrical cables complies with the command and safety instructions;**
- **That there is a (soundly secured to the ground) mechanical stop to prevent the gate leaf/gearmotor from over extending**

.

- **You may perform internal back up circuit connections, provided you use additional insulation when compared to the other internal live parts;**
- **Make sure you have suitable tubing and conduits for the electrical cables to pass through and be protected against mechanical damage.**

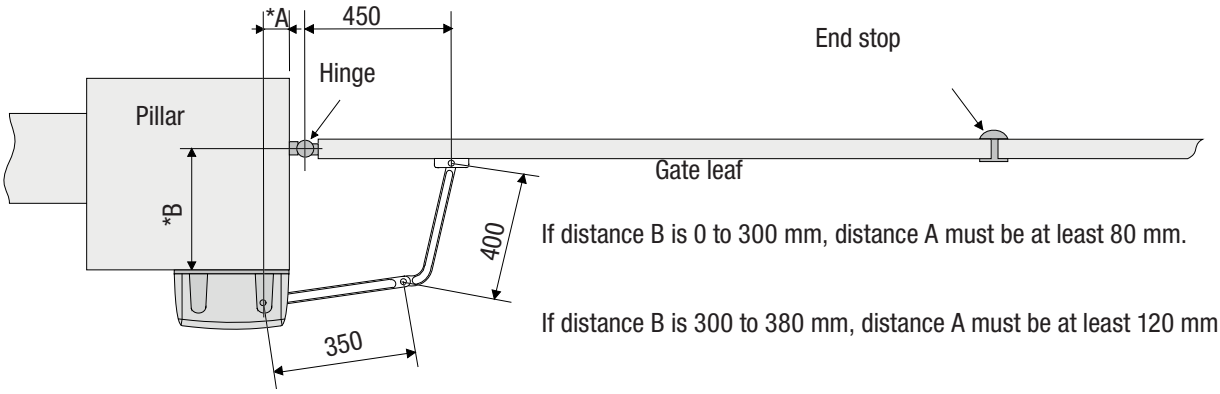

If distance B is 0 to 300 mm, distance A must be at least 80 mm.

If distance B is 300 to 380 mm, distance A must be at least 120 mm.

 © CAME S.p.A. - The data and information reported in this installation manual are susceptible to change at any time and without obligation on CAME S.p.A. to notify users.

5.2 Tools and materials

Make sure you have all the tools and materials you will need for the installation at hand to work in total safety and compliance with the current standards and regulations. The following figure illustrates the minimum equipment needed by the installer.

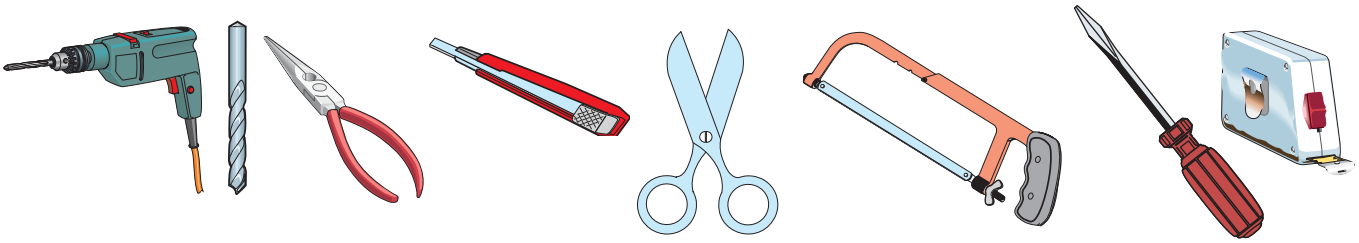

5.3 Cable list and minimum thickness

Connection	Type of cable	Cable length 1 < 10 m	Cable length 10 < 20 m	Cable length 20 < 30 m
230 V control panel power supply	FROR CEI 20-22 CEI EN 50267-2-1	3G x 1.5 mm^2	3G x 1.5 mm^2	3G x 2.5 mm^2
230 V motor power supply		3G x 1.5 mm^2	3G x 1.5 mm^2	3G x 2.5 mm^2
Flashing light		2 x 1.5 mm^2	2 x 1.5 mm^2	2 x 1.5 mm^2
Photocell transmitters		2 x 0.5 mm^2	2 x 0.5 mm^2	2 x 0.5 mm^2
Photocell receivers		4 x 1.5 mm^2	4 x 1.5 mm^2	4 x 1.5 mm^2
Accessories power supply		2 x 0.5 mm^2	2 x 0.5 mm^2	2 x 1 mm^2
Command and safety devices		2 x 0.5 mm^2	2 x 0.5 mm^2	2 x 0.5 mm^2
Antenna connection	RG58	max. 10 m		

N.B.: If the cable length differs from that specified in the table, then you must determine the proper cable diameter in the basis of the actual power drawn by the connected devices and depending on the standards specified in CEI EN 60204-1.
For connections that require several, sequential loads, the sizes given on the table must be re-evaluated based on actual power draw and distances. When connecting products that are not specified in this manual, please follow the documentation provided with said products.

5.4 Standard installation

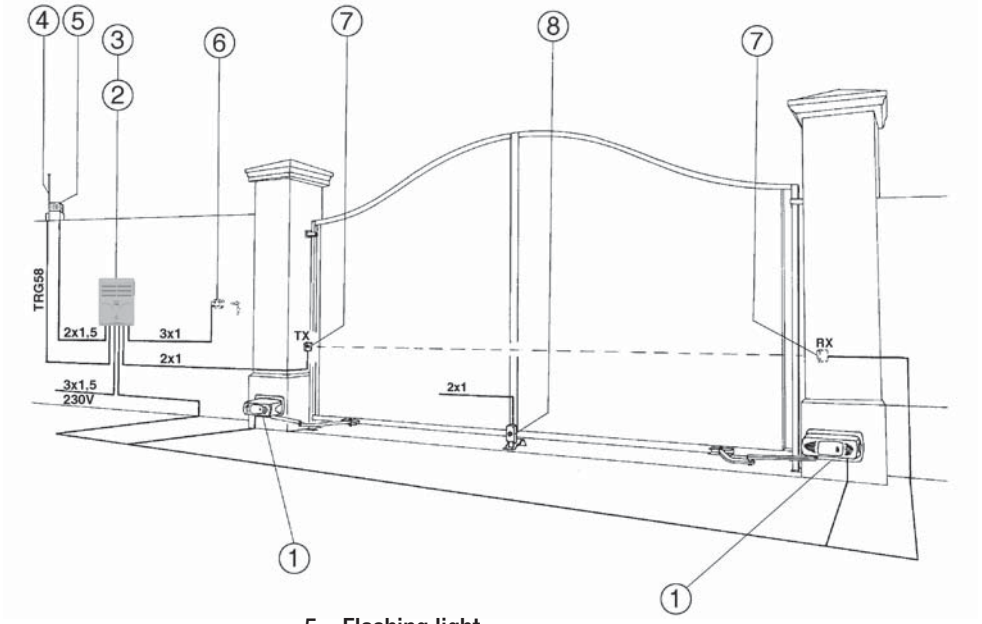

1 - Operator
2 - Control panel
3 - Radio receiver
4 - Antenna
5 - Flashing light
6 - Selector switch
7 - Photocells
8 - Electric lock

 © CAME S.p.A. - The data and information reported in this installation manual are susceptible to change at any time and without obligation on CAME S.p.A. to notify users.

5.5 Mounting

- Secure the base plate to the pillar using ø8 screws and ø14 moulded inserts making sure the minimum distance of 150mm from the ground is met.
- Secure the A bracket (using ø8 screws or by welding) to the gate leaf making sure the 450mm and 19mm distances measurements and are met.

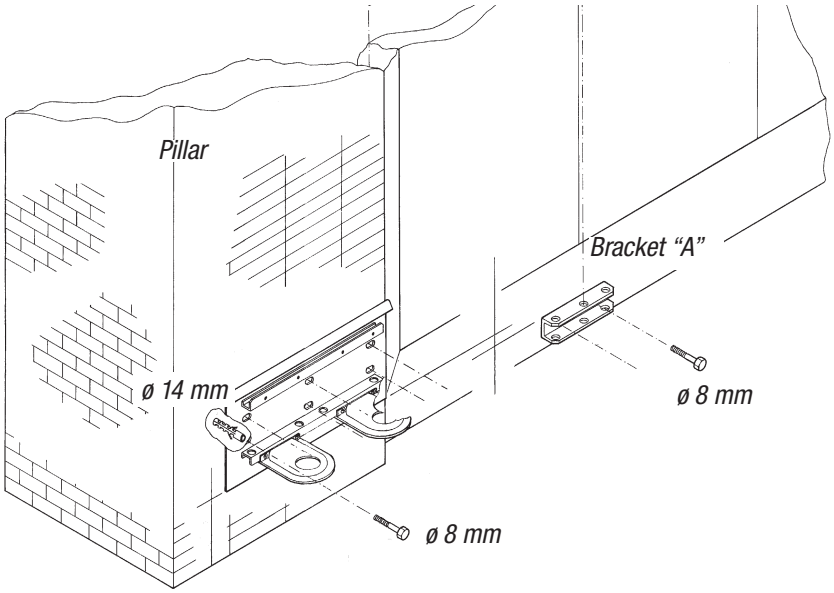

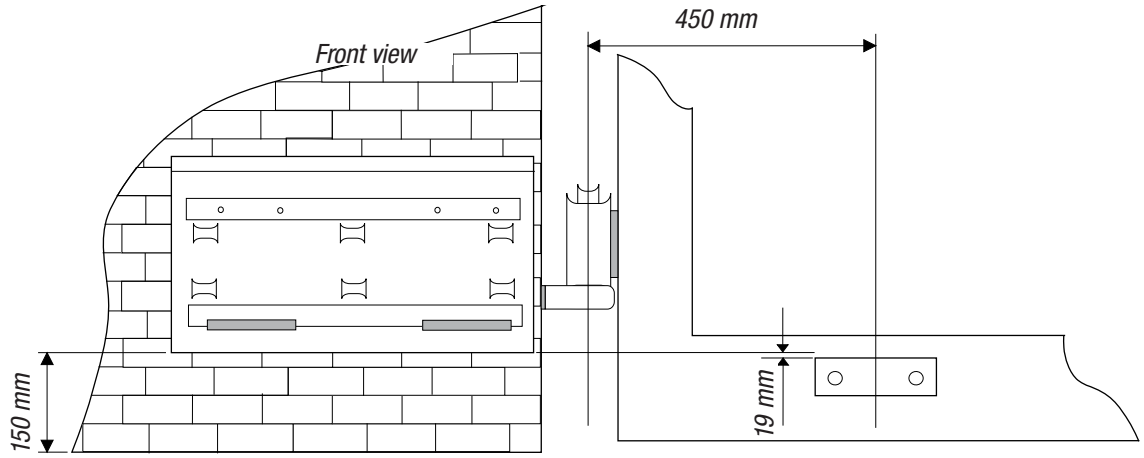

- Insert the gearmotor into the base plate and secure it using the two supplied M8x110 screws and M8 nuts.

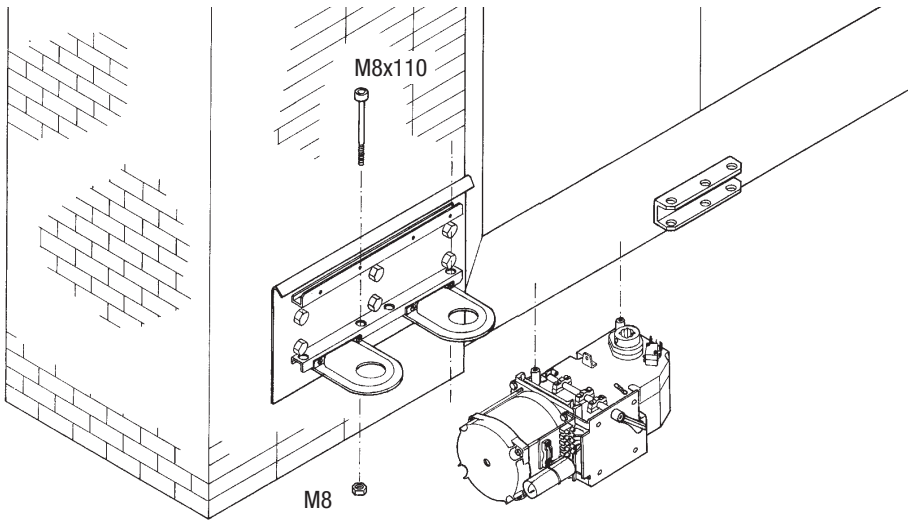

 © CAME S.p.A. - The data and information reported in this installation manual are susceptible to change at any time and without obligation on CAME S.p.A. to notify users.

- Insert the straight semi-arm into the motor shaft. Apply the flared washer, the M6x20 screw and lock the semi-arm using the two grub screws.
Join and secure the two arms using the washer and M8x16 screw. Release the motor (see p. 7) and secure the curved semi-arm to the “A” bracket using the M12X50 screw and the M12 nut making sure it runs freely. For right-hand application see fig. 2.

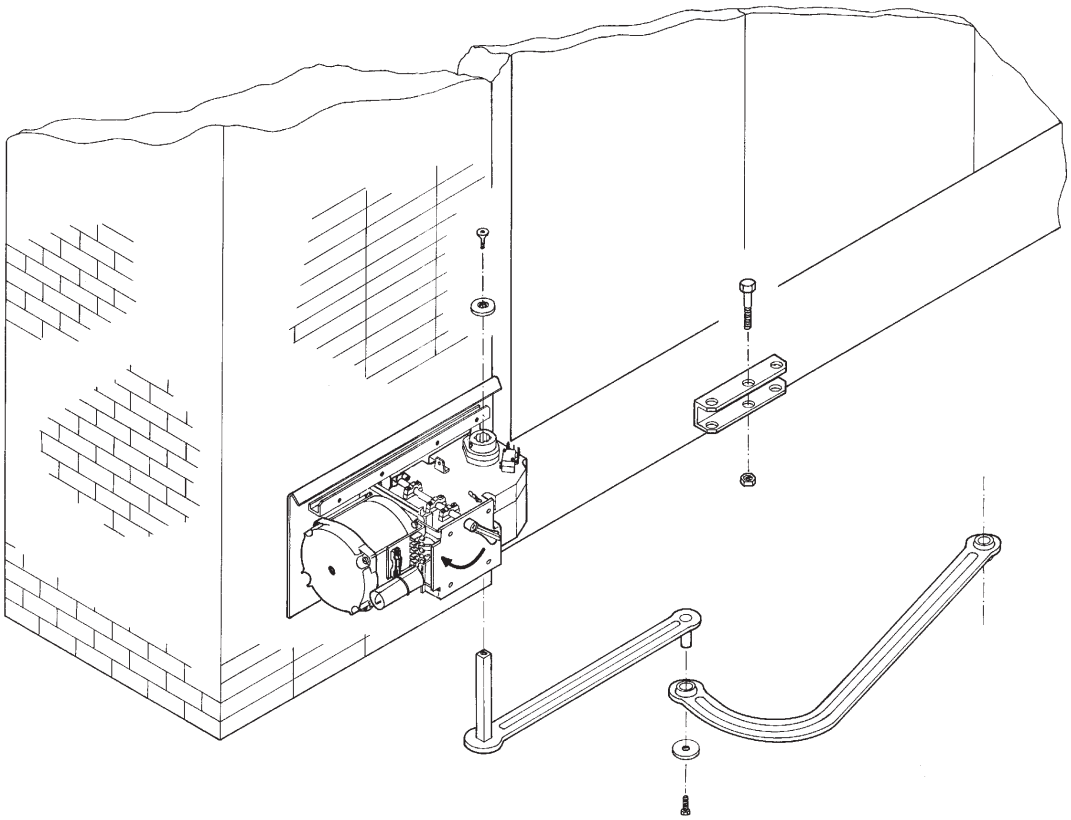

Fig. 2

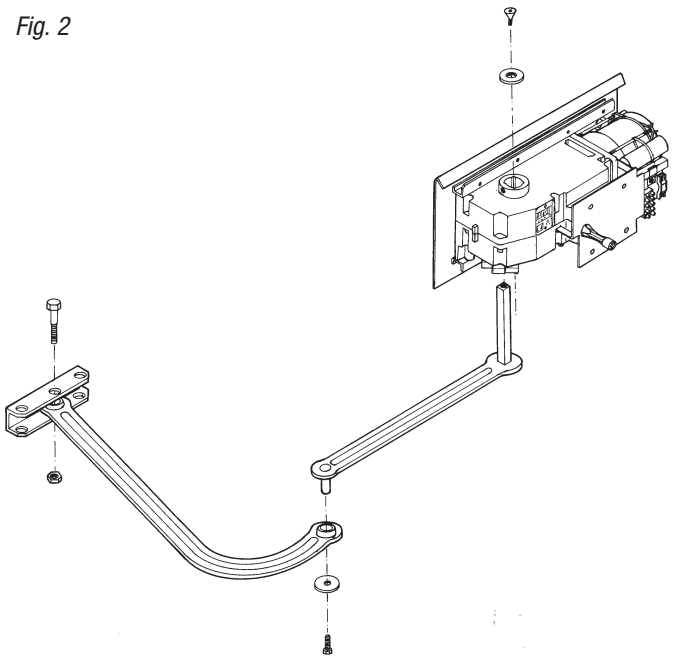

 © CAME S.p.A. - The data and information reported in this installation manual are susceptible to change at any time and without obligation on CAME S.p.A. to notify users.

5.7 Adjusting the closing and opening-speed brake microswitches

During opening: release and move the door to the open position desired. Turn the upper cam until the microswitch is activated and screw the microswitch is activated and screw the screw in the related cam.

During closure (F 1000 only): release the door and move it to the desired closing position. Turn the lower cam until the microswitch is activated and screw the screw in the related cam.

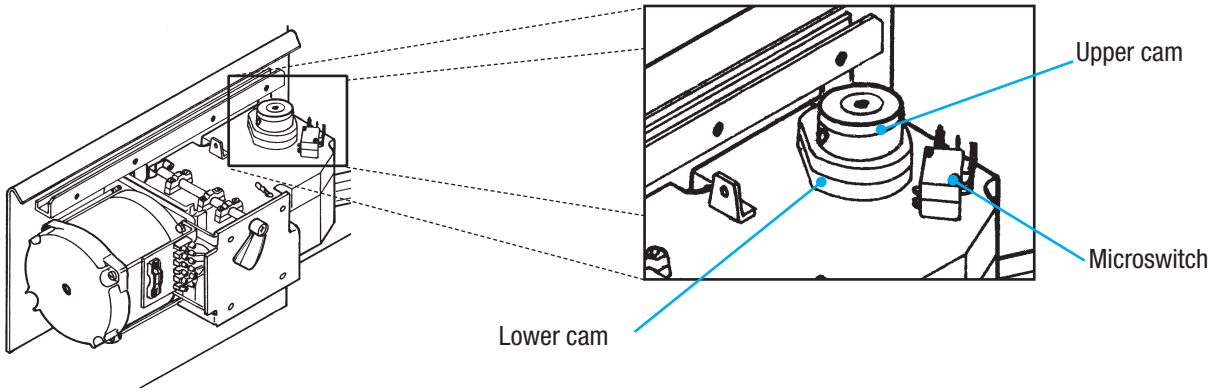

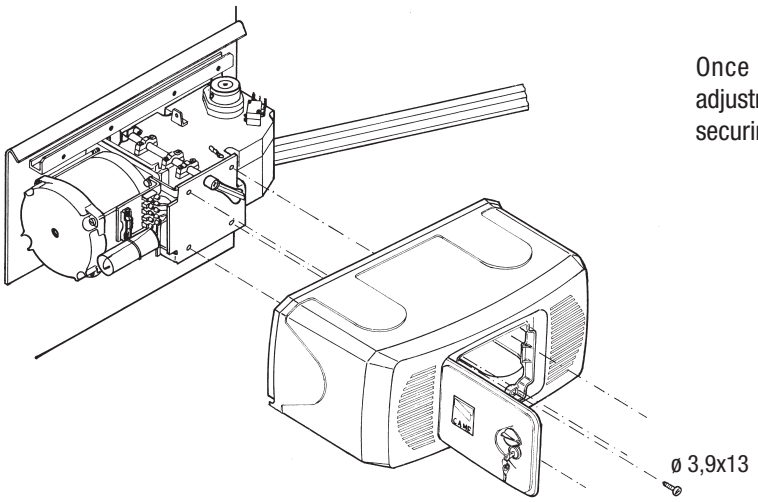

Once finished with mounting, electrical connections and adjustments, lock the motor back into place and replace the cover securing it with the 4 issued screws.

5.8 Manually releasing the motor

⚠ **Carry out when motor is not in operation**

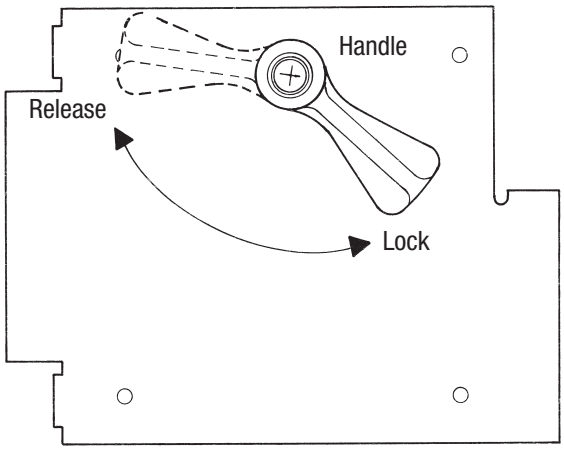

In the event of power outages or breakdowns, release the gearmotor using the apposite handle.

 © CAME S.p.A. - The data and information reported in this installation manual are susceptible to change at any time and without obligation on CAME S.p.A. to notify users.

5.9 Connecting to the ZA3N/ZF1N/ZM3E control panel

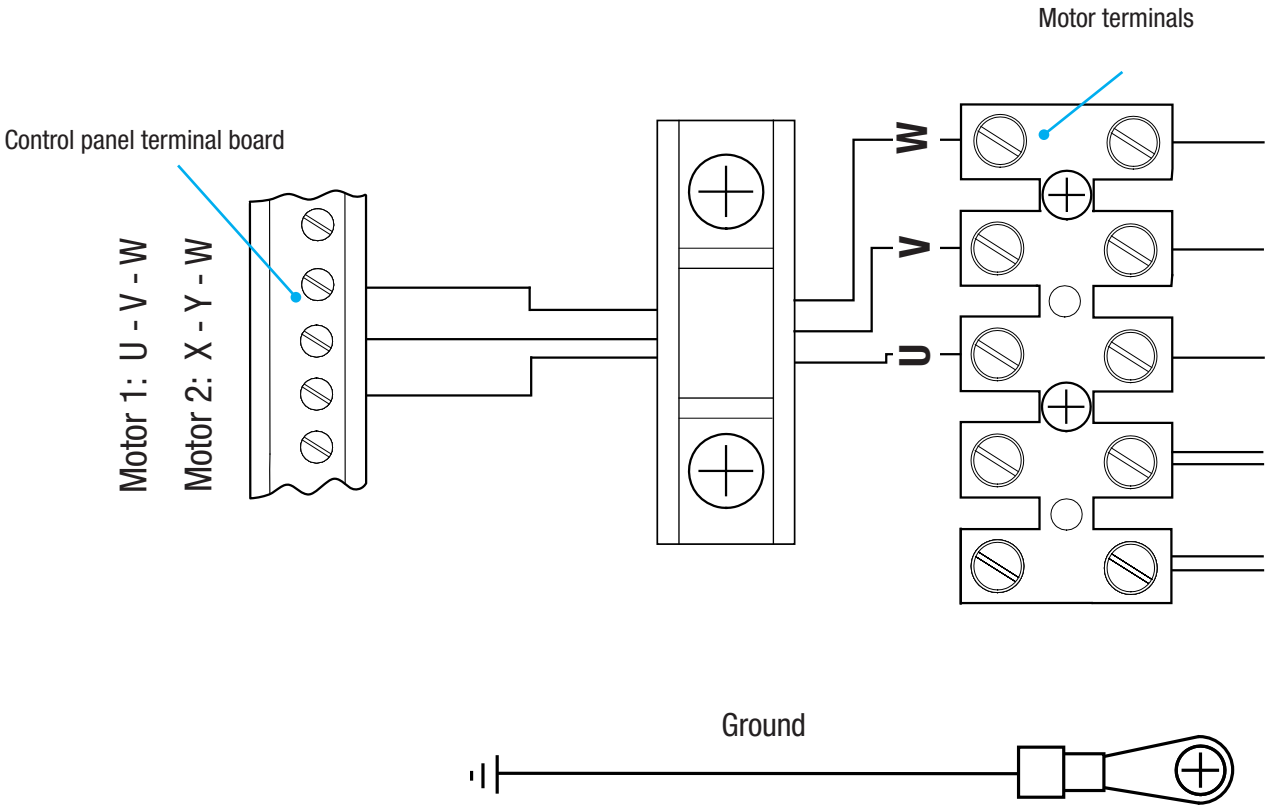

ENGLISH

 © CAME S.p.A. - The data and information reported in this installation manual are susceptible to change at any time and without obligation on CAME S.p.A. to notify users.

7 Maintenance

Periodic maintenance

☞ Before doing any maintenance, cut off the power supply, to prevent any hazardous situations caused by accidentally activating the operator.

ENGLISH

Periodic maintenance log kept by users (every six months)

Date	Notes	Signature

Extraordinary maintenance

⚠ The following table is for logging any extraordinary maintenance jobs, repairs and improvements performed by specialized contractors.
🕮 Any extraordinary maintenance jobs must be done only by specialized technicians.

Extraordinary maintenance log

Installer's stamp	Name of operator
	Job performed on (date)
	Technician's signature
	Requester's signature
Job performed _____ _____ _____	

Installer's stamp	Name of operator
	Job performed on (date)
	Technician's signature
	Requester's signature
Job performed _____ _____ _____	

 © CAME S.p.A. - The data and information reported in this installation manual are susceptible to change at any time and without obligation on CAME S.p.A. to notify users.

7.2 Trouble shooting

MALFUNCTIONS	POSSIBLE CAUSES	CHECK AND REMEDIES
The gate will not open nor close	• There is no power • The gearmotor is released • The transmitter's batteries are run down • The transmitter is broken • The stop button is either stuck or broken • The opening/closing button or the keyswitch are stuck	• Check that the power is up • Lock gearmotor (Chapt. 5.8) • Replace batteries • Call assistance • Call assistance • Call assistance
The gate opens but will not close	• The photocells are engaged	• Check that photocells are clean and in good working order • Call assistance
The flashing light does not work	• The bulb is burnt	• Call assistance

8 Demolition and disposal

CAME S.p.A. employs a UNI EN ISO 14001 certified and compliant environmental protection system at its plants, to ensure that environmental safeguarding.
We ask you to keep protecting the environment, as CAME deems it to be one of the fundamental points of its market operations strategies, by simply following these brief guidelines when disposing:

DISPOSING THE PACKING MATERIALS
The packing components (cardboard, plastic, etc.) are solid urban waste and may be disposed of without any particular difficulty, by simply separating them so that they can be recycled.
Before actions it is always advisable to check the pertinent legislation where installation will take place.
DO NOT DISPOSE OF IN NATURE!

DISPOSING OF THE PRODUCT
Our products are made using different types of materials. The majority of them (aluminium, plastic, iron, electric cables) can be considered to be solid urban waste. They may be recycled at authorised firms.
Other components (electrical circuit board, remote control batteries etc.) may contain hazardous waste.
They must, thus, be removed and turned in to licensed firms for their disposal.
Before acting always check the local laws on the matter.
DO NOT DISPOSE OF IN NATURE!

DECLARATION OF CONFORMITY

Declaration CE CAME S.p.A. declares that this device conforms to the essential, pertinent requirements provided by directives 2006/42/CE, 2004/108/CE.
An original copy of the declaration of conformity is available on request.

 © CAME S.p.A. - The data and information reported in this installation manual are susceptible to change at any time and without obligation on CAME S.p.A. to notify users.

IT • Per ogni ulteriore informazione su azienda, prodotti e assistenza nella vostra lingua:

EN • For any further information on company, products and assistance in your language:

FR • Pour toute autre information sur la société, les produits et l'assistance dans votre langue :

DE • Weitere Infos über Unternehmen, Produkte und Kundendienst bei:

ES • Por cualquier información sobre la empresa, los productos y asistencia en su idioma:

NL • Voor meer informatie over het bedrijf, de producten en hulp in uw eigen taal:

PT • Para toda e qualquer informação acerca da empresa, de produtos e assistência técnica, em sua língua:

PL • Wszystkie inne informacje dotyczące firmy, produktów oraz usług i pomocy technicznej w Waszym języku znajdują się na stronie:

RU • Для получения дополнительной информации о компании, продукции и сервисной поддержке на вашем языке:

HU • A vállalatra, termékeire és a műszaki szervizre vonatkozó minden további információért az Ön nyelvén:

HR • Za sve dodatne informacije o poduzeću, proizvodima i tehničkoj podršci:

UK • Для отримання будь-якої іншої інформації про компанію, продукцію та технічну підтримку:

CAME UNITED KINGDOM LTD
UNIT 3, ORCHARD BUSINESS PARK TOWN STREET,
SANDIACRE
NOTTINGHAM - NG10 5BP - U.K.
Tel 0044 115 9210430
Fax 0044 115 9210431



www. came.com

English *- Manual code:* ***119D69EN*** *ver.* ***6*** *01/2015 © CAME S.p.A.*

The data and information reported in this installation manual are susceptible to change at any time and without obligation on CAME S.p.A. to notify users.

CAME

CAMEGROUP

CAME S.p.A.
Via Martiri Della Libertà, 15
31030 **Dosson Di Casier** (Tv)
(+39) 0422 4940
(+39) 0422 4941
Assistenza Tecnica/Numero Verde 800 295830