Operatore elettromeccanico per cancelli ad anta battente

Istruzioni d'uso ed avvertenze

Electro-mechanical operator for swing gates

Operating instructions and warnings

Motoréducteur électromécanique pour portails battants

Notice d'emploi et avertissements

Operador electromecánico para puertas con hoja batiente

Instrucciones de uso y advertencias

Operador electromecânico para portões de folha batente

Instruções para utilização e advertências

Siłownik elektromechaniczny do bram skrzydłowych

Instrukcja montażu i użytkowania

DEA®

move as you like

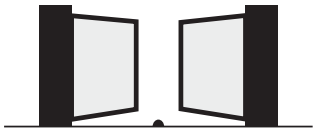

www.deasystem.com

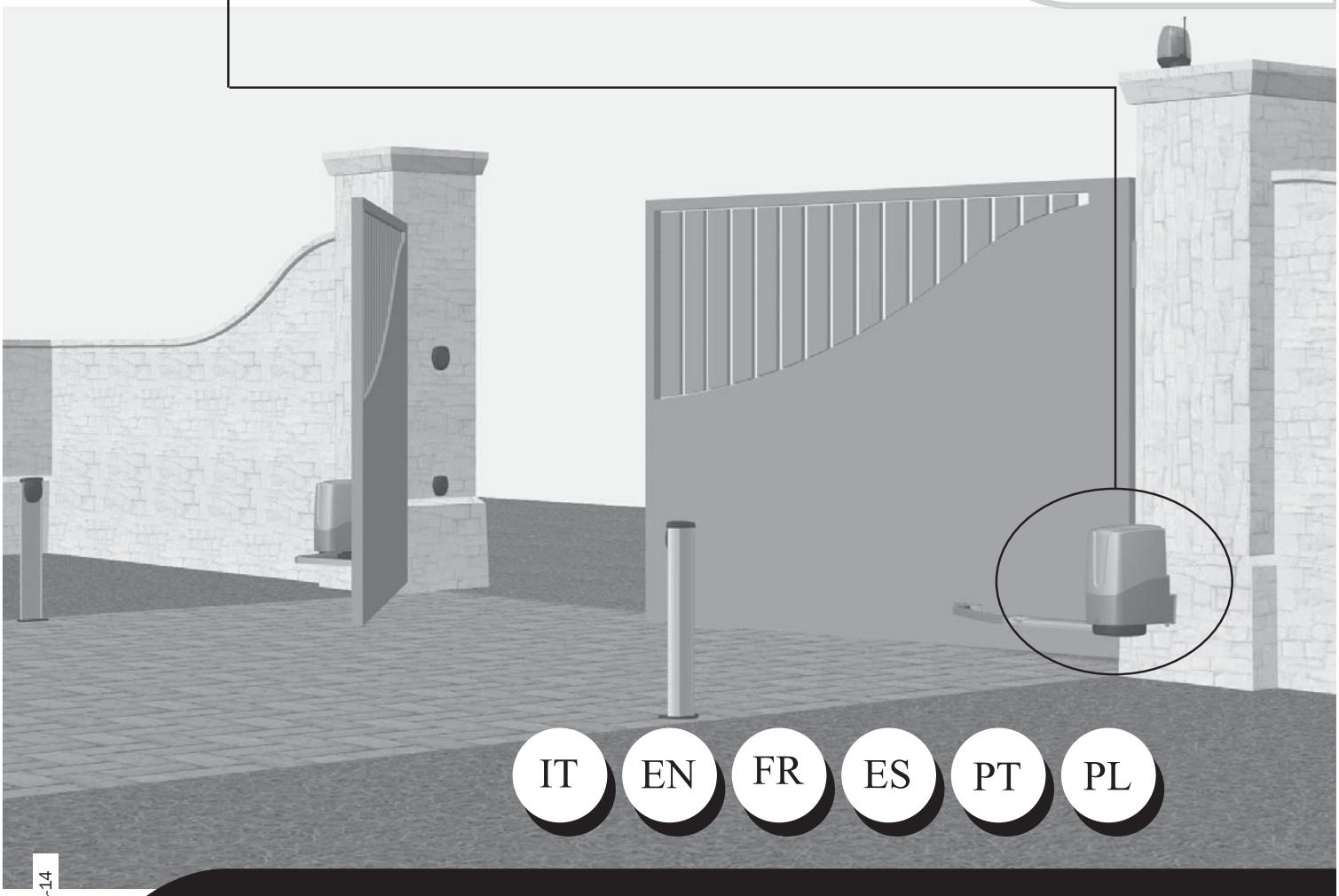

IT EN FR ES PT PL

GEKO

I6280XX Rev. 06.1 23-04-14

La Dichiarazione di Incorporazione può essere consultata sul sito

The Declaration of Incorporation may be consulted by entering

La Déclaration d'Incorporation peut être vérifié à l'adresse

La Declaracion de Incorporación puede ser consultada en la dirección de internet

A Declaração de Incorporação pode ser consultada em

Deklarację Włączenia można skonsultować wchodząc na stronę

http://www.deasystem.com

Nome ed indirizzo della persona autorizzata a costituire la Documentazione Tecnica pertinente:

DEA SYSTEM S.p.A.
Via Della Tecnica, 6
36013 PIOVENE ROCCHETTE (VI) - ITALY

LIEVORE TIZIANO
Amministratore

GEKO

Electro-mechanical operator for swing gates
Operating instructions and warnings

Index

1	Warnings Summary	**17**
2	Product Description	**18**
3	Technical data	**18**
4	Installation and Assembly	**18**
5	Electrical Connections	**19**
6	Standard Programming	**21**
7	Advanced Programming	**24**
8	Messages shown on the Display	**26**
9	Start-up	**26**
9.1	Installation Test	**26**
9.2	Unlocking and manual operation	**26**
10	Maintenance	**27**
11	Product Disposal	**27**

Product Conformity

DEA System guarantees the conformity of the product to European Directives 2006/42/CE regarding "machinery safety", 2004/108/CE "electromagnetic compatibility" and 2006/95/CE "low voltage electrical equipment". See **Declaration of Incorporation.**

1 WARNINGS SUMMARY

Read these warnings carefully; failure to respect the following warnings may cause risk situations.

⚠ **WARNING** Using this product under unusual conditions not foreseen by the manufacturer can create situations of danger, and for this reason all the conditions prescribed in these instructions must be respected.

⚠ **WARNING** **DEA** System reminds all users that the selection, positioning and installation of all materials and devices which make up the complete automation system, must comply with the European Directives 2006/42/CE (Machinery Directive), 2004/108/CE (electromagnetic compatibility), 2006/95/CE (low voltage electrical equipment). In order to ensure a suitable level of safety, besides complying with local regulations, it is advisable to comply also with the above mentioned Directives in all extra European countries.

⚠ **WARNING** Under no circumstances must the product be used in explosive atmospheres or surroundings that may prove corrosive and damage parts of the product.

⚠ WARNING To ensure an appropriate level of electrical safety always keep the 230V power supply cables apart (minimum 4mm in the open or 1 mm through insulation) from low voltage cables (motors power supply, controls, electric locks, aerial and auxiliary circuits power supply), and fasten the latter with appropriate clamps near the terminal boards.

⚠ **WARNING** All installation, maintenance, cleaning or repair operations on any part of the system must be performed exclusively by qualified personnel with the power supply disconnected working in strict compliance with the electrical standards and regulations in force in the nation of installation.

⚠ **WARNING** Using spare parts not indicated by **DEA** System and/or incorrect re-assembly can create risk to people, animals and property and also damage the product. For this reason, always use only the parts indicated by **DEA** System and scrupulously follow all assembly instructions.

⚠ **WARNING** Incorrect assessment of the impact forces can cause serious damage to people, animals or things. **DEA** System reminds the installer must verify that the impact forces, measured as indicated by the standard EN 12445, are actually below the limits set by the standard EN12453.

⚠ **WARNING** Any external security devices used for compliance with the limits of impact forces must be conform to standard EN12978.

WARNING In compliance with EU Directive 2002/96/EC on waste electrical and electronic equipment (WEEE), this electrical product should not be treated as municipal mixed waste. Please dispose of the product and bring it to the collection for an appropriate local municipal recycling.

2 PRODUCT DESCRIPTION

Models and contents of the package

GEKO is an operator for the automation of swing gates and doors with door medium and small size. It is essentially made up of:
- an operator;
- a programmable control panel (adjustable strength, speed, operators stroke, etc..) with built-in 433.92 MHz radio receiver;

Inspect the “Contents of the package” (Pic. 1) comparing it with your product, for useful reference during assembly.

Transport

GEKO is always delivered packed in boxes that provide adequate protection to the product, however, pay attention to all information that may be provided on the same box for storage and handling.

3 TECHNICAL DATA

GEKO			
CONTROL BOARD		**OPERATOR**	
Power supply (V)	230 V ~ ±10% (50/60 Hz)	**Motor power supply (V)**	24 V ⎓
Rated power transformer (VA)	120 VA (230/22V)	**Capacity (W)**	80 W
Fuse F2 (A) (transformer)	2A	**Max torque (Nm)**	180 Nm
Batteries	2x 12V 1,3A	**Duty cycle (cycles/hour)**	20
Fuse F1 (A) (batteries input)	15A	**Maximum n° of operations in 24 hour**	60
24V operators outputs	2x 5A	**Operating temperature range (°C)**	-20÷50
Auxiliaries power supply output	+24 V ⎓ max 200mA	**Opening time 90°(s)**	16
“Warning” output	+24 V ⎓ max 15 W	**Product weight with package (kg)**	12 Kg
Electric lock output	24V ⎓ max 5W or max 1 art. 110	**Protection degree**	IP44
Flashing light output	24 V ⎓ max 15W		
Receiver frequency	433,92 MHz		
Transmitters type of coding	HCS fix-code - HCS rolling code - Dip-switch		
Max remote controllers managed	100		

4 INSTALLATION AND ASSEMBLY

4.1 For a satisfactory installation of the product is important to:

- Verify that the gate complies with the legal requirements and then define the complete project of the installation;
- Verify that the gate is well balanced and that it has no points of friction in opening and closing;
- Identify an area that allows a smooth and safe manual operation of the operator;
- Verify that the operator bulk is compatible with the area chosen for the fitting (Pic. 2);
- Ensure that the space for the rotation of the arm is sufficient (Pic. 3).
- Use the length/weight graphic and the provided installations dimensions (Pic. 4) evaluating whether you prefer **a 90°** or **a 120°** opening.

4.2 Once you have defined and satisfied these requirements, proceed with the assembly:

- fix the operator fixing plate to the pillar by using screws and plugs suitable to the type of surface and material (Pic. 5);
- mount the straight arm by using the supplied screw and washer (Pic. 6);
- insert the operator inside the wall connection plate and fix it with the provided screws and nuts (Pic. 7);
- Mount the swing fixing hinge and the curved arm to the straight arm by using the provided pins and seeger rings (Pic. 8);
- weld the hinge to the gate or fix it with screws suitable to the type of material;

4.3 How to unlock the operator

WARNING Disconnect the power supply from the control panel before releasing the operator. In case you cannot turn the power off, you will necessarily have to re-lock the motor in the position in which it was unlocked.

Lift the cover window (Pic. 9a) and, after having inserted the unlocking key, rotate clockwise until it stops (Fig. 9b).

4.4 How to fix and adjust the mechanical limit switches

- Unlock the operator;
- Rotate the wing to the position of complete opening, position the mechanical limit switch on the stop with the straight arm and fasten it with the provided screws (Pic. 10). If necessary, you can mount a second mechanical limit switch for the closing stop. In this case follow the above directions by moving the door in the desired closed position and fix it with the screws provided in detention;
- Repeat the previous step for a possible second door;
- Secure the protective cover on the straight arm with the screws provided (Pic. 10).

5 ELECTRICAL CONNECTIONS

Execute the wiring following the directions of table 1 and diagrams on page 20.

WARNING To ensure an appropriate level of electrical safety always keep the 230V power supply cables apart (minimum 4mm in the open or 1 mm through insulation) from low voltage cables (motors power supply, controls, electric locks, aerial and auxiliary circuits power supply), and fasten the latter with appropriate clamps near the terminal boards.

WARNING Connect to the power supply 230 V ~± 10% 50 Hz through a multi pole switch or a different device that can ensure multi pole disconnection from the power supply, with a contact opening of 3 mm.

WARNING To connect the encoder to the control panel, use only a dedicated cable 3x0,22mm^2.

EN

Table 1 "terminal board connections"

1-2	+24VAUX	+24 V ⎓ power supply output for auxiliary devices 200mA		
3-4	22 V ~	22 V ~ transformer power supply input		
5-6	24VBatt	24 V ⎓ battery power supply or photovoltaic accumulator Green Energy input (follow carefully polarity indications).		
7-8	M1	Operator 1 output		
9	⏚	Connection of motors metallic parts		
10-11	M2	Operator 2 output (if present)		
12-13	WARNING	24 V ⎓ max 15 W output for open gate fix warning light (if P052=0), flashing (if P052=1) or courtesy light (if P052>1)		
14-15	ELETTR	**14 (-)** / **15 (+)**	"Boost" output for electric-lock, max 1 x art. 110 (if P062=0), 24V pulse output, max 5W (if P062=1), step by step (if P062=2), electro-brake output for not self-locking operators (if P062=3), output for electric-lock power supply via external relay (if P062=4), output for electro-magnets power supply for barriers (if P062=5) or temporized output (if P062>5).	
16-17	FLASH	24 V ⎓ Flashing light output max 15W art. Lumy/24A/S		
18-19	STOP	**18 - N.C.** / **19 - Com**	Input 6 STOP. In case of intervention, it stops the movement of both motors during any operation. **If unused, short circuit**.	If the installation requires different commands and / or additional to the standard, you can configure each input to the required rate. **Refer to Chapter "Advanced Programming".**
20-21	PHOTO 2	**20 - N.C.** / **21 - Com**	Input 5 PHOTO 2. When enabled (see parameter P051 in the table), activation of PHOTO 2 provokes: an inversion of direction (during closing), the arrest of the movement (during opening), prevent the start (gate closed). **If unused, short circuit**.	
22-23	PHOTO 1	**22 - N.C.** / **23 - Com**	Input 4 PHOTO 1. When enabled (see parameter P050 in the table), activation of PHOTO 1 provokes: an inversion of direction (during closing), the arrest of the movement (during opening), prevent the start (gate closed). **If unused, short circuit**.	
24-25	SAFETY	**24 - N.C.** / **25 - Com**	Input 3 SAFETY. If activated, it causes the inversion. See P055 and P056 on the parameters table. **If unused, short circuit**.	
26-27	PED	**26 - N.O.** / **27 - Com**	Input 2 PED. If activated, it opens motor nr. 1 only.	
28-29	START	**28 - N.O.** / **29 - Com**	Input 1 START. In case of intervention it provokes: the operator opening or closing. It may operate as "inversion" mode (P049=0) or "step by step" mode (P049=1).	
30	Y	Aerial signal input		
31	⏚	Ground aerial input		
32-33	DE@NET	**32 (+)** / **33 (-)**	DE@NET mains input (unused at the moment)	
CON 1		230 V ~ ±10% (50/60 Hz) power supply input		
CON 2		Connection of encoder to operator 2 (1-2-3)		
CON 3		Connection of power supply to operator 2 + ground (4-5-6)		
J5 B A / **J9** B A		Encoder selection Jumper: • A position = operators with encoder (remind to set P029=0) • B position = operators without encoder (remind to set P029=1)		

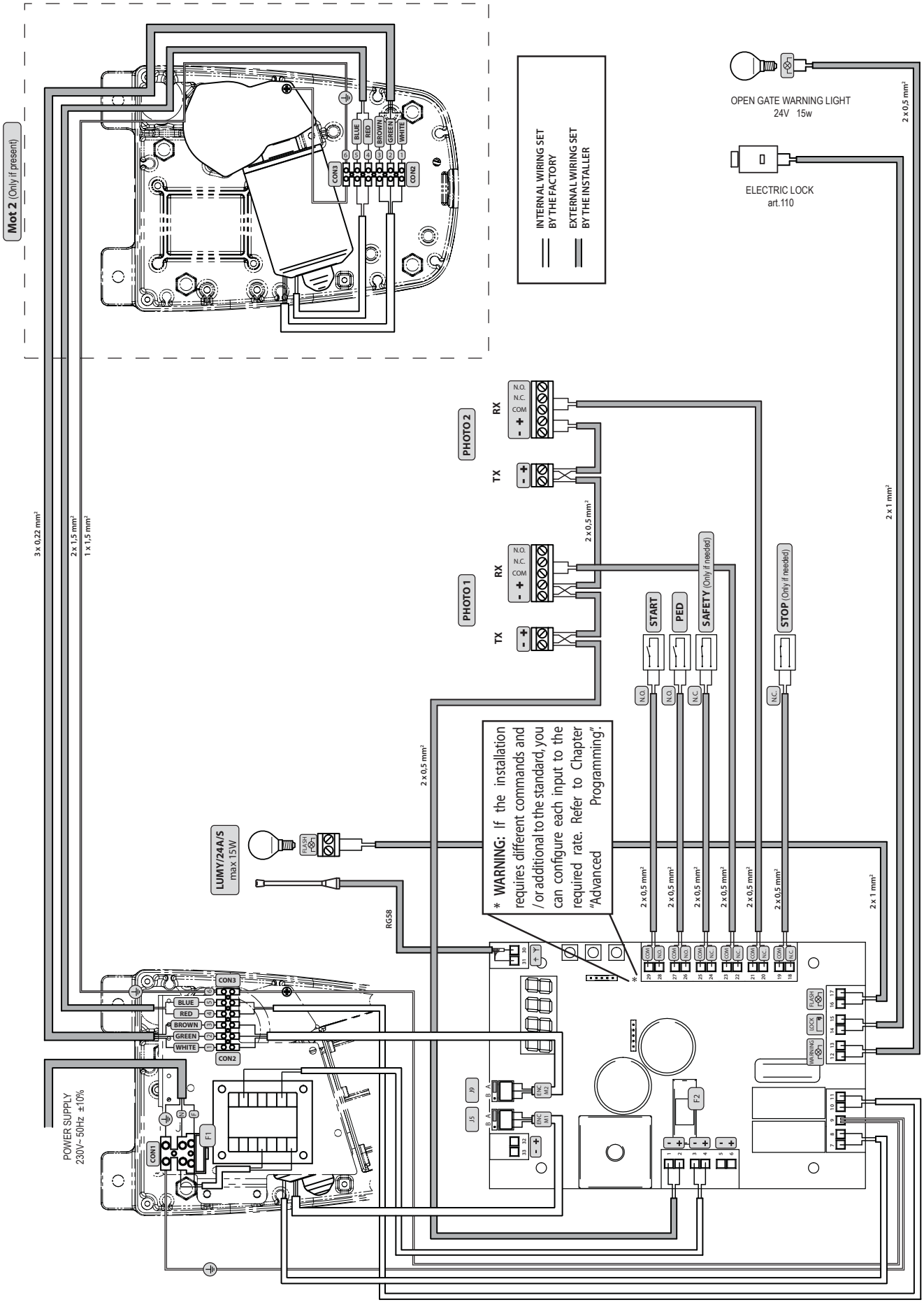
Mot 2 (Only if present)
INTERNAL WIRING SET BY THE FACTORY
EXTERNAL WIRING SET BY THE INSTALLER
OPEN GATE WARNING LIGHT
24V 15w
ELECTRIC LOCK
art.110
PHOTO 2
PHOTO 1
RX
TX
N.O.
N.C.
COM
START
PED
SAFETY (Only if needed)
STOP (Only if needed)
LUMY/24A/S
max 15W
RG58
* WARNING: If the installation requires different commands and / or additional to the standard, you can configure each input to the required rate. Refer to Chapter "Advanced Programming".
POWER SUPPLY
230V~ 50Hz ±10%
CON1
CON2
CON3
BLUE
RED
BROWN
GREEN
WHITE
F1
F2
J5
J9
ENC M1
ENC M2
FLASH
LOCK
WARNING
3 x 0,22 mm²
2 x 1,5 mm²
1 x 1,5 mm²
2 x 0,5 mm²
2 x 1 mm²

6 STANDARD PROGRAMMING

1 Power Supply

Give power supply, the display shows the following symbols "rES-", "tYPE", "-01-" and then "----".



* If the control panel has already been programmed and the power fails or is switched off - once power is returned and a START command is given, the position reset procedure is performed (see "rESP" in the table "WORKING STATUS MESSAGES" on page 26.

2 Visualisation of inputs and operations-counter status

1. Press the OK key for 15 seconds;
2. The display will show respectively:
   Inputs status (check it's correct);

   OPEN CONTACT

   CLOSE CONTACT

   Total operations counter (* see P064):
   i.g.: C003 = 3x1000* = 3000 operations performed

   Maintenance operations-counter (* see P065):
   i.g.: c005 = 5*x500 = 2500 operations remaining before the maintenance intervention request (c---- = manoeuvres-counter disabled)
3. Hold down the OK key to display a cyclic 3 options, or release the OK button to exit the parameter.

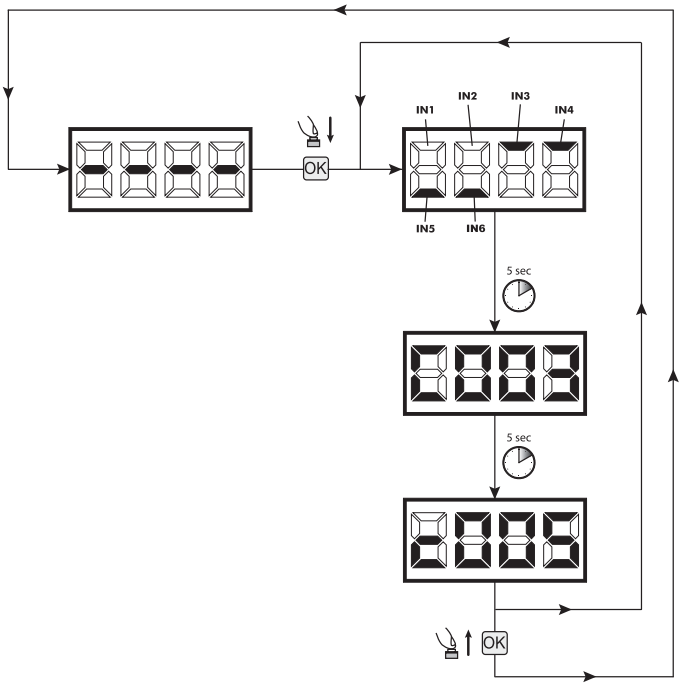

3 Selection type of operators ! IMPORTANT !

1. Scroll down the parameters with + and − keys until you visualise P028;
2. Access the parameter by pressing the OK key;
3. Verify that the value corresponds to d000 (GEKO), otherwise, you must select it by pressing + and − keys;
4. Confirm your choice by pressing the OK key (display returns again to P028).

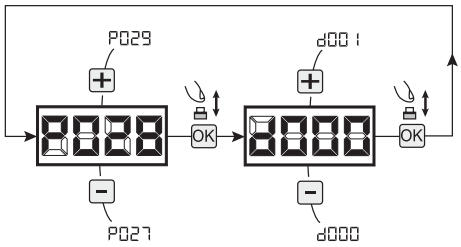

4 Selection operating with or without encoder ! IMPORTANT !

Warning: Remember to correctly set the jumpers J5 and J9.

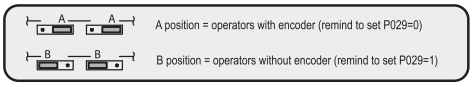

1. Scroll down the parameters with + and − keys until you visualise P029;
2. Access the parameter by pressing the OK key;
3. Acting on + and − keys, set:
   - d000=for operators with encoder;
   - d001=for operators without encoder;
4. Confirm your choice by pressing the OK key (display returns again to P029).

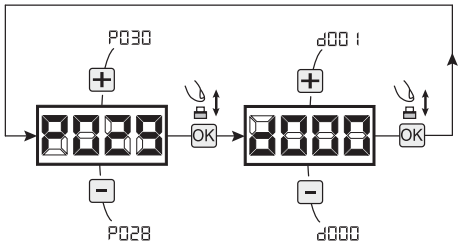

EN

5 Selection 1 or 2 operators functioning

1. Scroll down the parameters with + and − keys until you visualise P030;
2. Access the parameter by pressing the OK key;
3. Acting on + and − keys, set:
   - d001=for a single motor operating;
   - d002=for 2 motors operating;
4. Confirm your choice by pressing the OK key (display returns again to P030).

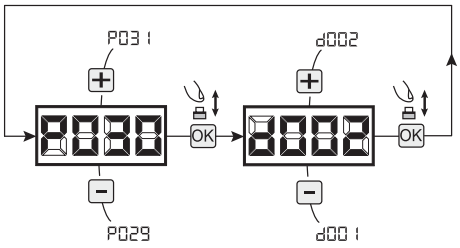

6 Motor stroke learning

1. Scroll down the parameters with + and − keys until you visualise P003;
2. Access the parameter by pressing the OK key;
3. When "APPr" flashes, continue pressing the OK key;
4. Release the OK key when "APPr" stops flashing; the learning procedure starts;
5. Wait for the door (or doors in case of using 2 motors) searches and stops on the opening stop and then on the closing stop.
   If you want to anticipate the stopping strokes in opening, you can manually intervene by giving an impulse to "Start" button (or pressing the "OK" on the control panel) simulating the stroke.
6. Once the procedure is ended, the display will show "----".

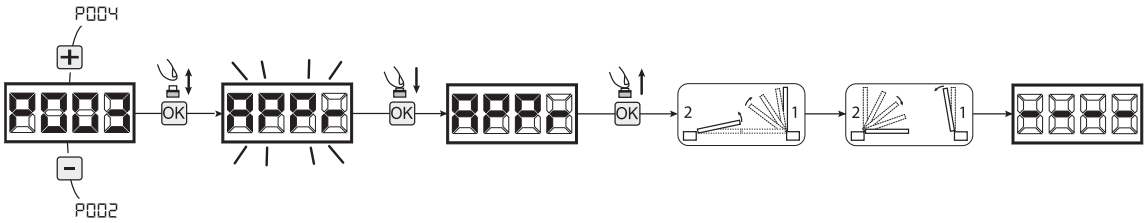

WARNING Once you have executed the learning stroke, operate a complete cycle (opening/closing) and then check the manual release to make sure it is working properly. If it's to "hard" increase the value of P057 of 1 or more.

7 Transmitters learning

7.1 Transmitters coding selection

1. Scroll down the parameters with + and − keys until you visualise P027;
2. Access the parameter by pressing the OK key;
3. Select the type of transmitter by scrolling + and − keys:
   - d000=fix rolling-code (**suggested**);
   - d001=complete rolling-code;
   - d002=dip-switch;
4. Confirm by pressing on the OK key (display shows again P027).

Warning: If you need to vary the type of encoding, and only if other remotes with different encoding are memorized, you need to erase memory (P004) **AFTER** you have set the new encoding.

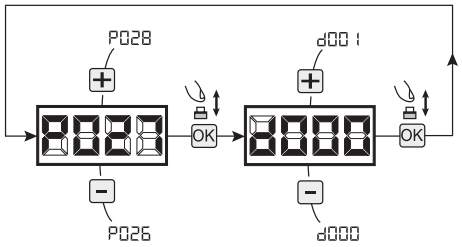

7.2 Learning

1. Scroll down the parameters with + and − keys until you visualise P005;
2. Confirm by pressing on the OK key;
3. When the symbol "LEAr" appears, press on any key of the transmitter you want to memorize;
4. The display visualizes the number of the transmitter just memorized and then "LEAr";
5. Memorize all necessary transmitters repeating this procedure from step 3;
6. Wait 10 seconds before quitting the memorization mode, display shows now "----".

Warning: In the case of rolling code remotes, the receiver can be put into learning mode by pressing the hidden button on a remote control previously learned.

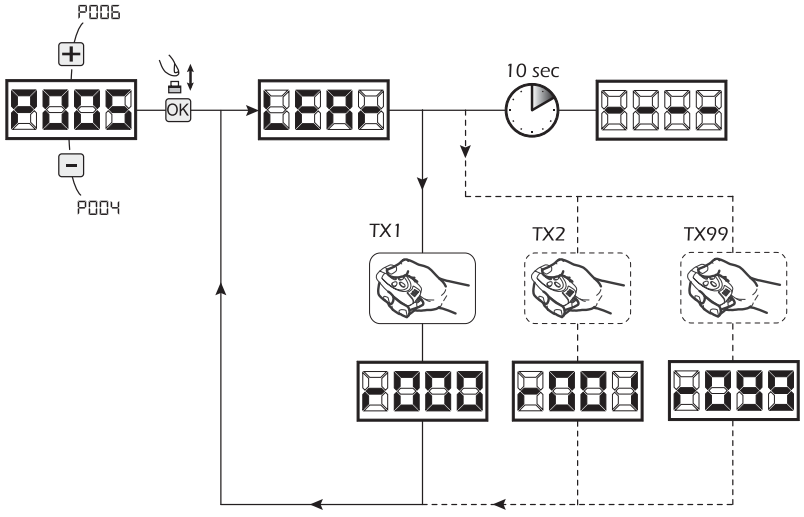

8 Adjustment of operating parameters

If you need to modify the operating parameters (force, speedness etc..):

1. Scroll down the parameters until you visualize the desire parameter (i.e. P032);
2. Access the parameter by pressing the OK key;
3. By pressing on + and − keys, set up the desired value;
4. Confirm by pressing on the OK key (display shows the parameters previously selected).

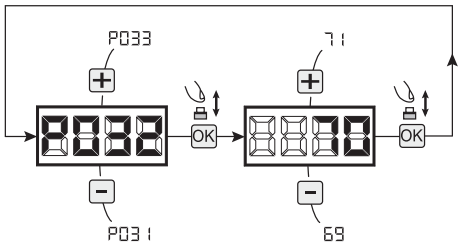

For the complete list of the "Operating Parameters" See the table on page. 29.

9 Programming complete

WARNING At the end of the programming procedure, use the buttons + and − until the appearance of the symbol "----", the operator is now ready again for new manoeuvres.

To perform any "Advanced Programming" operations (cancellation of the remotes, configuration inputs, etc. ..), see on page 24.

7 ADVANCED PROGRAMMING

Here are some added programming procedures relating to remotes memory management and advanced configuration of the control inputs.

1 Deletion of memorized transmitters

1.1 Deletion of all transmitters

1. Scroll down the parameters until you visualize P004;
2. Confirm by pressing on the OK key;
3. When "CAnC" is flashing, press the OK key for a few seconds;
4. Release the OK key as soon as "CAnC" stops flashing;
5. All memorized transmitters have been deleted (display shows again P004).

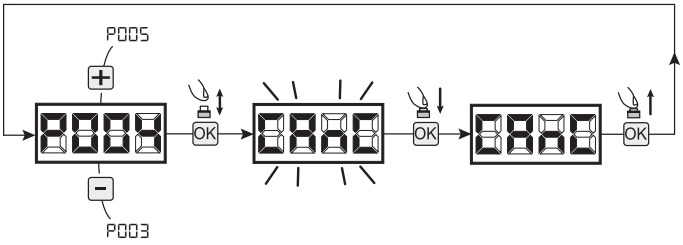

1.2 How to search and delete a transmitter

1. Scroll down the parameters until you visualize P006;
2. Confirm by pressing on the OK key;
3. By pressing on + and −, keys, select the transmitter you want to delete (eg. r003);
4. When "r003" flashes, confirm the deletion by pressing the OK key for a few seconds;
5. Release the OK key when appears "r ---";
6. The selected transmitter is deleted (display shows again P006).

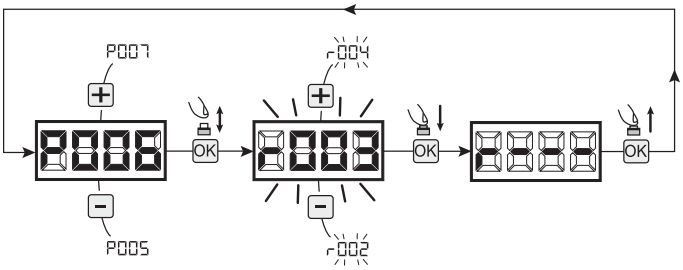

2 Resetting of default parameters

1. Scroll down the parameters until you visualize P007;
2. Confirm by pressing on the OK key;
3. When "dEF-" flashes, press the OK key;
4. Release the OK key as soon as "dEF-" stops flashing; Default parameters for the configuration currently in use are restored;
5. At the end of the operation display returns to P007.

Warning: After you restore the default parameters, you must program the control panel again and adjust all operating parameters, in particular, remember to properly set the configuration of parameters (P028 - P029 - P030 – operator configuration).

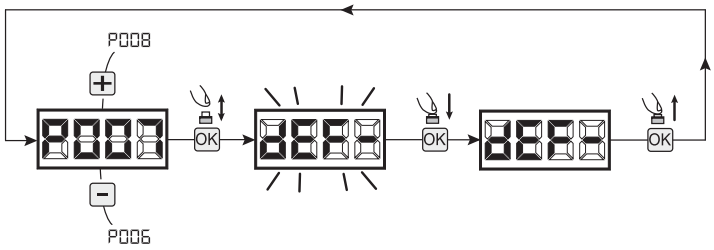

3 Locking-Unlocking access to programming

By using a "dip-switch" remote (regardless of the type of remotes already memorized) it's possible to lock-unlock access to the programming of the control panel to avoid tampering. The remote setting is the locking-unlocking code verified by the control board.

3.1 Locking access to programming

1. Scroll through the parameters with the buttons + and − until the display shows P008;
2. Access the parameter by pressing the button OK;
3. The display shows alternately the writing Pr0G/FrEE to indicate that the control board is waiting for the transmission of the block code;
4. Within 10 seconds press CH1 on the "TX Master", the display shows Pr0G/bL0C before returning to the list of parameters;
5. Access to programming is locked.

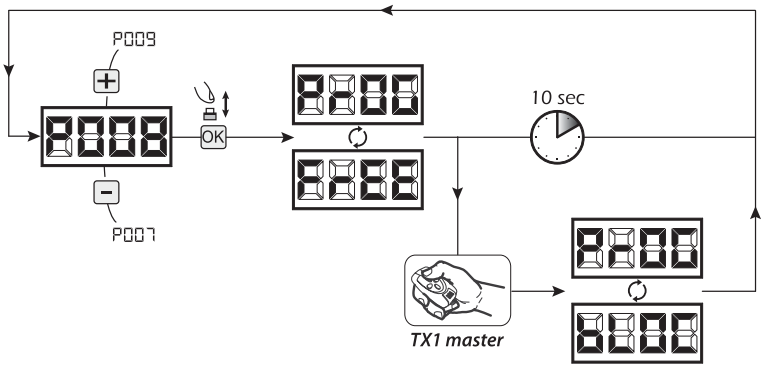

3.2 Unlocking access to programming

1. Scroll through the parameters with the buttons ⊕ and ⊖ until the display shows P008;
2. Access the parameter by pressing the button OK;
3. The display shows alternately the writing PrOG/bLOC to indicate that the control board is waiting for the transmission of the unlocking code;
4. Within 10 sec. press the CH1 of the "TX Master", the display shows PrOG/FrEE before returning to the list of parameters;
5. Access to programming is unlocked.

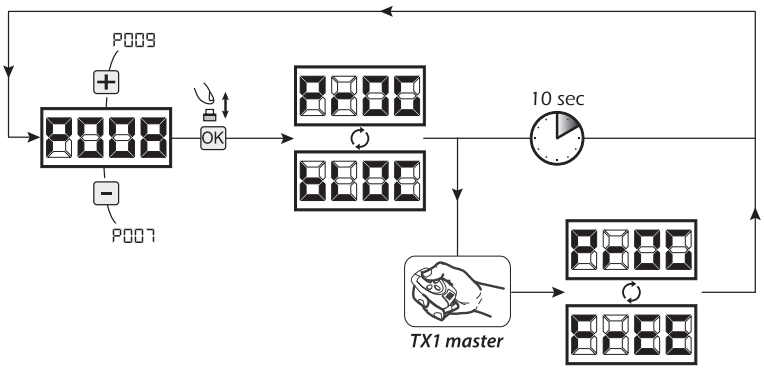

3.3 Unlocking access to programming and global reset

WARNING! This procedure involves the loss of all stored settings.

The procedure allows the unlocking of the control panel without having to know its unlocking code.
Following this release, **in particular, remember to properly set the configuration of parameters (P028 - P029 - P030 – operator configuration)**. You will also need to repeat the measurement of impact forces to ensure the installation compliance to standards.

1. Scroll through the parameters with the buttons ⊕ and ⊖ until the display shows P008;
2. Access the parameter by pressing the button OK;
3. The display shows alternately the writing PrOG/bLOC;
4. Press the button OK, the display shows the flashing writing FrEE ;
5. Press the button again and hold for 5 seconds (releasing it before, the procedure is terminated): The display shows the fixed writing FrEE followed by dEF-, before returning to the list of parameters;
6. Access to programming is unlocked.

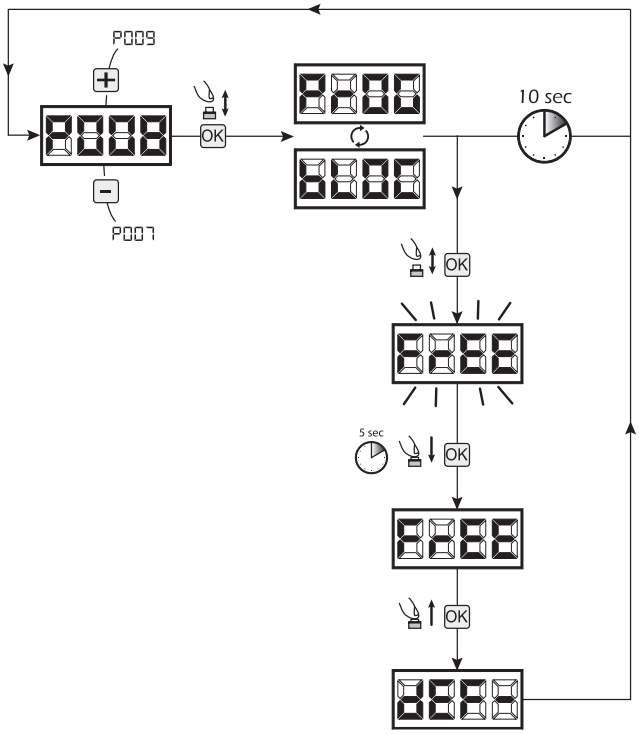

4 Inputs configuration

Where the installation requires different commands and / or additional to the standard ones described by plan, you can configure each input for the operation desired (eg START, PHOTOS, STOP, etc ...).

1. Scroll down the parameters with the ⊕ and ⊖ to see that corresponding to the desired one:
   - P017=for INPUT 1;
   - P018=for INPUT 2;
   - P019=for INPUT 3;
   - P020=for INPUT 4;
   - P021=for INPUT 5;
   - P022=for INPUT 6;
2. Confirm by pressing on the OK key to get access to the parameter (eg. P018);
3. Scroll down with the ⊕ and ⊖, keys to set the value corresponding to the desired operation (refer to table "Input Configuration parameters" on page 28);
4. Confirm by pressing on the OK key (display shows again P018).
5. Execute the new connection to the input just reconfigured.

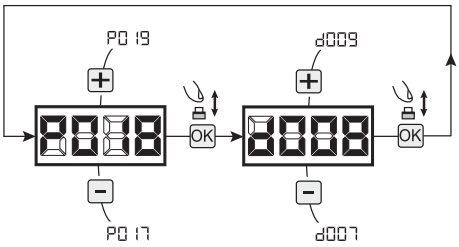

5 Programming complete

WARNING At the end of the programming procedure, use the buttons ⊕ and ⊖ until the appearance of the symbol "----", the operator is now ready again for new manoeuvres.

EN

8 MESSAGES SHOWN ON THE DISPLAY

WORKING STATUS MESSAGES		
Mess.	*Description*	
----	Gate is closed	
JL	Gate is opened	
OPEn	Opening under way	
CLOS	Closing under way	
StEP	While in step-by-step mode, the control board awaits further instructions after a start command	
bLOC	Stop command received	
rESP	Reset current position: The control unit has just been turned on after a power failure, or the gate has exceeded the maximum number (80) of inversions allowed without ever getting to the closing stroke, or the maximum number (3) of consecutive operations allowed of the anti- crushing device. Once the control unit has been reset and open command given the gate will start moving at slow speed, until it reaches end of travel.	
ERROR MESSAGES		
Mess.	*Description*	*Possible solutions*
ErrP	Error position: The reset position procedure is not successful. The control panel is awaiting commands.	- Make sure there are no specific frictions and / or obstacles during the run; - Give a start pulse to initiate a position reset procedure; - Verify that the operation is completed successfully, manually helping the run, if necessary; - Adjust power and speed settings if necessary.
Err3	External photocells and/or safety devices are activated or out of order.	- Make sure that all safety devices and/or photocells installed are working properly.
Err4	Possible failure to the control board power circuit.	- Disconnect and connect power supply. Give a start impulse, if this error appears again, replace the control board.
Err5	Time-out operators run: The engine/s exceeded the maximum operating time (4min) without ever stopping.	- Give a start pulse to start the position reset procedure; - Ensure that this operation is successful.
Err6	Time-out obstacle detection: With anti-crushing sensor disabled, was still detected the presence of an obstacle that prevents movement of the leaf for a period of 10 seconds more.	- Make sure there are no specific frictions and / or obstacles during the run; - Give a start pulse to initiate a position reset procedure; - Verify that the operation is completed successfully.
Err7	Operators mouvement not detected.	- Make sure that operators and encoders connections are well done. - Check that jumpers J5 and J9 are well positioned as shown on the electric wiring. - If this error appears again, replace the control panel.

9 START-UP

The start-up phase is very important to ensure maximum security and compliance to regulations, including all the requirements of EN 12445 standard which establishes the test methods for testing the automation for gates.

DEA System reminds that all installation, maintenance, cleaning or repair operations on any part of the system must be performed exclusively by qualified personnel who must be responsible of all texts requie by the eventual risk;

9.1 Installation test

The testing operation is essential in order to verify the correct installation of the system. **DEA** System wants to summarize the proper testing of all the automation in 4 easy steps:

- Make sure that you comply strictly as described in paragraph 2 “WARNINGS SUMMARY”;
- Test the opening and closing making sure that the movement of the leaf match as expected.
  We suggest in this regard to perform various tests to assess the smoothness of the gate and defects in assembly or adjustment;
- Ensure that all safety devices connected work properly;
- Perform the measurement of impact forces in accordance with the standard 12445 to find the setting that ensures compliance with the limits set by the standard EN12453.

WARNING Using spare parts not indicated by **DEA** System and/or incorrect re-assembly can create a risk to people, animals and property and also damage the product. For this reason, always use only the parts indicated by **DEA** System and scrupulously follow all assembly instructions.

9.2 Unlocking and Manual operation

In the event of malfunctions or simple power failure, release the motor (Pic. 9) and perform the operation manually.

The knowledge of the unlocking device is very important because, in times of emergency, lack of speed in operating this device can cause danger.

WARNING The efficancy and safety of manual operation of the automation is guaranteed by **DEA** System only if the installation has been installed correctly and with original accessories.

10 MAINTENANCE

Good preventive maintenance and regular inspection ensure long working life. In the table below you will find a listo f inspections/ maintenance operations to be programmed and executed periodically.

Consult the TROUBLE-SHOOTING" table whenever anomalies are observed in order to find the solution to the problem and contact **DEA** System directly whenever the solution required is not provided.

INTERVENTION TYPE	PERIODICITY
cleaning of external surfaces	6 months
checking of screw tightening	6 months
checking of release mechanism operation	6 months
greasing of articulated joint	1 year

TROUBLE-SHOOTING	
Description	*Possible solutions*
When the opening command is given, the gate wing fails to move and the operator's electric motor fails to start.	The operator is not receiving correct power supply. Check all connections, fuses, and the power supply cable conditions and replace or repair it if necessary. If the gate does not close check if the photocells work properly.
When the opening command is given, the motor starts but the gate leaf fails to move.	Make sure the unlocking system is closed.
	Make sure that the electronic device for power adjustment is in good condition.
The operator jerks or is noisy during movement, it stops midway or else it does not start.	If the leaf of the gate does not move freely, release the operator and readjust the rotation points.
	The power of the gearmotor may be insufficient for the characteristics of the gate's leaf; check the choice of model whenever required.
	If the plate fastening the operator to the gate bends or is inappropriately fastened, repair it or reinforce it.

11 PRODUCT DISPOSAL

WARNING In line with EU Directive 2002/96/EC for waste electrical and electronic equipment (WEEE), this electrical product must not be disposed of as unsorted municipal waste. Please dispose of this product by returning it to your local municipal collection point for recycling.

	PAR.	PROCEDURE	SETTABLE VALUES
PROGRAMMING PROCEDURES	P001	Positioning of operator 1	
	P002	Positioning of operator 2	
	P003	Memorization of the motors' stroke	
	P004	Deletion of transmitters	
	P005	Transmitters memorizing	
	P006	Search and deletion of a transmitter	
	P007	Loading of standard parameters: the list is up dated with factory settings	
	P008	Lock access to programming	
	P009	How to learn connected DE@NET devices (unused at the moment)	
	P010	Unused parameter	
	P011	Unused parameter	
	P012	Unused parameter	
	P013	Unused parameter	
	P014	Unused parameter	
	P015	Unused parameter	

	PAR.	SETTABLE VALUES	SETTABLE VALUES		DEFAULT VALUES (for different standards of installation) TYPE 01
INPUTS CONFIGURATION PARAMETERS	P016	INPUT_3 selectioning input type	• 000: IN3 type=free contact • 001: IN3 type=constant resistance 8K2		000
	P017	INPUT_1 operating selection	• 000: NONE (unused parameter) • 001: START (start) • 002: PED. (pedestrian) • 003: OPEN (separated open) • 004: CLOSE (separated close) • 005: OPEN_PM (man present open) • 006: CLOSE_PM (man present close) • 007: ELOCK-IN (electric-lock activation. See P062) • 008: PHOTO 1 (photocell 1) • 009: PHOTO 2 (photocell 2) • 010: SAFETY 1 (safety rib 1) • 011: STOP (lock) • 012: FCA1 (opening limit switches Mot1) • 013: FCA2 (opening limit switchtes Mot2) • 014: FCC1 (closing limit switches Mot1) • 015: FCC2 (closing limit switches Mot2) • 016: SAFETY 2 (safety rib 2)	IN1	001
	P018	INPUT_2 operating selection		IN2	002
	P019	INPUT_3 operating selection		IN3	010
	P020	INPUT_4 operating selection		IN4	008
	P021	INPUT_5 operating selection		IN5	009
	P022	INPUT_6 operating selection		IN6	011

					TYPE 01
INPUTS CONFIGURATION PARAMETERS	P023	Allocation of CHANNEL 1 of remotes	• 000: NONE (unused parameter) • 001: START (start) • 002: PEDESTRIAN (pedestrian) • 003: OPEN (separated open) • 004: CLOSED (separated close) • 005: OPEN_PM (man present open) • 006: CLOSED_PM (man present close) • 007: ELOCK-IN (electric-lock activation. See P062)	**CH1**	001
	P024	Allocation of CHANNEL 2 of remotes		**CH2**	000
	P025	Allocation of CHANNEL 3 of remotes		**CH3**	000
	P026	Allocation of CHANNEL 4 of remotes		**CH4**	000
	P027	Selection of type of remotes	• 000: HCS fix-code • 001: HCS rolling-code • 002: Dip-switch		000
OPERATORS CONFIGURATION PARAMETERS	P028	Selection type of operators	• 000: GEKO • 001: LOOK - MAC (Unused) • 002: GHOST 100/200 (Unused) • 003: 500 - 502 (Unused)		000
	P029	Selected work with or without encoders. CAUTION: Remember to correctly set the jumpers J5 and J9 (see table 1) WARNING: J5, J9 and P029 must be set correctly before performing the procedure for programming	• 000: motors with encoder • 001: engines without encoder		001
	P030	Selectioning operators number	• 001: one operator • 002: two operators		002
OPERATING PARAMETERS	P031	Operators speed adjustment during slow-down while opening	15%tot.....100%tot		050
	P032	Operators speed adjustment during the stroke while opening	15%tot.....100%tot		100
	P033	Operators speed adjustment during the stroke while closing	15%tot.....100%tot		100
	P034	Operators speed adjustment during slow-down while closing	15%tot.....100%tot		050
	P035	Slow down duration adjustment while opening	5%tot.....80%to		020
	P036	Slow down duration adjustment while closing	5%tot.....80%tot		020
	P037	Operator 1 force adjustment while opening (if = 100% obstacle detection deactivated)	15%tot.....100%tot		050
	P038	Operator n.1 force adjustment while closing (if = 100% obstacle detection deactivated)	15%tot.....100%tot		050
	P039	Operator n.2 force adjustment while opening (if = 100% obstacle detection deactivated)	15%tot.....100%tot		050
	P040	Operator n.2 force adjustment while closing (if = 100% obstacle detection deactivated)	15%tot.....100%tot		050
	P041	Automatic closing times adjustment (if = 0 automatic closing deactivated)	0sec.....255sec		000
	P042	Pedestrian automatic closing time adjustment (se = 0 pedestrian automatic closing deactivated)	0sec.....255sec		000
	P043	Pedestrian stroke duration adjustment	5%tot.....100%tot		035
	P044	Pre-flashing time adjustment	0sec.....10sec		000
	P045	Adjustment of phase displacement time while opening	0sec.....30sec		001
	P046	Adjustment of phase displacement time while closing	0sec.....30sec		003
	P047	Collectivity function: if it is activated it deactivates both opening and closing inputs for the whole duration of automatic opening and closing	• 000: “collectivity function” deactivated • 001: “collectivity function” activated		000
	P048	Ram blow function: it pushes the motors closed for one second before each opening movement, so as to ease the electric-lock release	• 000: “ram blow” deactivated • 001: “ram blow function” activated		000

					TYPE 01
OPERATING PARAMETERS	P048		"Reversal" mode selection (during the manoeuvre a command impulse reverse the mouvement) or "step by step" (during the manoeuvre a command impulse stops the mouvement). A next impulse restart the operator to the opposite direction.	• 000: "reversal function" • 001: "step by step function"	000
	P050	PHOTO 1	PHOTO input functioning: If=0: photocell enabled while closing and starting when the gate is stopped; if=1 photocells are always enabled; if=2 photocells are enabled while closing only. When enabled, its activation provokes: the inversion (while closing), the stop (while opening) and prevent the starting (when gate is closed). If=3-4-5, the operation is the same as the values 0-1-2 but with "close immediately" enabled: in any case, during the opening and/or the pause time, removal of a possible obstacle causes the gate automatically closes after a fixed delay of 5 sec.	• 000: photocell enabled while closing and when gate is stopped • 001: photocells always enabled • 002: photocells enabled only while closing • 003: as 000 but with "close immediately" enabled • 004: as 001 but with "close immediately" enabled • 005: As 002 but with "close immediately" enabled	002
	P051	PHOTO 2			001
	P052		Operation mode selection of the warning light output: If = 0 "warning light" (output always ON when the gate is open, OFF after a closing operation), If = 1 "flashing warning light" (slow intermittent output during opening and fast while closing, always ON at gate opened, always OFF at the end of a closing operation only), If> 1 "courtesy light" (output ON during each movement, OFF when the motor stops, after the setting delay)	• 000: "fix warning light" • 001: "flashing warning light" • >001 : "courtesy light" off delay (2sec.....255sec)	001
	P053		Searches for end of stroke while opening too: when activated, operators stop only at their arrival et the end of stroke, also while opening. **Warning:** During the emergency operation (rESP), the motor executes the first maneuver while opening. In addition, if any limit switches, the parameter is forced to 1.	• 000: Stop when opening on a memorized point • 001: Stop when opening on the end of stroke	000
	P054		"soft start" function: motors accelerate gradually until they reach the set speed, avoiding sudden departures	• 000: "soft start" deactivated • 001: "soft start" activated • 002: "long soft start" activated	001
	P055		Adjust the inversion on obstacle period (detected by internal anti-crushing sensor or by the safety input when activated): If = 0 it makes a complete inversion, if> 0 indicates the duration (in seconds) of the run, after inversion resulting from detection of an obstacle during the opening.	• 000: complete reversal on obstacle • >000: duration of reversal on obstacle (1sec.....10sec)	000
	P056		Adjust the inversion on obstacle period (detected by internal anti-crushing sensor or by the safety input when activated): If = 0 it makes a complete inversion, if> 0 indicates the duration (in seconds) of the run, after inversion resulting from detection of an obstacle during the closing.	• 000: complete reversal on obstacle • >000: duration of reversal on obstacle (1sec.....10sec)	000
	P057		Facilitation manual release: If≠0, after detecting the locking stop, the engine reverses for a brief time to release the pressure on it, and thus facilitate the manual release. The set value shows the length of the inversion. If=0 function disabled	• 000: facilitating release disabled • >000: facilitation activated with release time equal to: (1x25ms.....20x25ms)	001
	P058		Adjustment of the opening stroke margin: it adjusts the duration of the last part of the stroke during which an obstacle is interpreted as a stroke, blocking the motor without performing the inversion. For motors with encoders, the set value indicates the number of revolutions of the rotor; while for motors without encoder, the value is expressed in% of the maximum stroke. **Warning:** for motors without encoder, if P035 (duration slow-down while opening) is >10%, it forces the stroke detection margin so that it's the same than the slow-down.	1.....255 (motors with encoder) 0%.....100% (motors without encoder)	025
	P059		Adjustment of the closing stroke margin: it adjusts the duration of the last part of the stroke during which an obstacle is interpreted as a stroke, blocking the motor without performing the inversion. For motors with encoders, the set value indicates the number of revolutions of the rotor; while for motors without encoder, the value is expressed in% of the maximum stroke. **Warning:** for motors without encoder, if P036 (duration slow-down while closing) is >10%, it forces the stroke detection margin so that it's the same than the slow-down.	1.....255 (motors with encoder) 0%.....100% (motors without encoder)	025
	P060		Operators force adjustment at stroke arrival - If = 0, setting off (the force value on the stroke is calculated automatically) - If ≠ 0, indicates the value (expressed in% of the max value) of the force exerted on the stroke.	0%tot.....100%tot	035
	P061		"Energy saving" mode: If=1 after 10sec of inactivity, the control panel turns the 24V outputs and the display off that will be turned on at first command received (use recommended battery-powered and / or solar panel).	• 000: "Energy saving" not active • 001: "Energy saving" active	000

					TYPE 01
OPERATING PARAMETERS	P062		Electric-lock output operating: If=0 “boost” output for electric-lock art.110 power supply, If=1 24V output controlled by the ELOCK_IN input as pulsed mode,If=2 24V output controlled by the ELOCK_IN input as step-by-step mode, If=3 electro-brake output for not self-locking operators, If=4 24V output for electric-lock power supply via an external relay, If=5 24V output for electro-magnets power supply for barriers, If>5 24V output controlled by the ELOCK_IN input as temporized mode (the set value indicates the switch-off delay in seconds).	• 000: “Boost” output for electric-lock art.110 power supply • 001: “24V ⎓ pulse output max 5W • 002: “24V ⎓ step-by-step output max 5W • 003: “Electro-brake output for not self-locking operators • 004: “Output for electric-lock power supply via an external relay • 005: “output for electro-magnets power supply for barriers • >005: “24V ⎓ temporized output max 5W (6sec.....255sec)	000
	P063		Run direction inversion: If=1 automatically reverses the outputs open/close of the operators and any opening/closing limit switches inputs, avoiding having to manual change the wiring when installing the operator in an inverted position.	• 000: “Standard installation” • 001: “Inverted installation”	000
	P064		Multiplier operations-counter: Multiply the number of operations after which the total operations-counter will be updated. To view the values, refer to the section “Visualisation of inputs and operations-counter status”.	• 000: “x100 • 001: “x1000 • 002: “x10000 • 003: “x100000	001
	P065		Maintenance Operations-counter: if = 0 reset the counter and disables the intervention request , if > 0 indicates the number of operations (x 500) to be made before the control panel executes a 4 second additional pre-flash to indicate the need of maintenance. i.g.: If P065 = 050, operations number = 50x500 = 25000 operations **Warning:** Before you set a new value of the counter-manoeuvres maintenance, the same must be reset by setting P065= 0 and only later P065 = “new value”.	• 000: “Request Maintenance disabled • >000: “Number of operations (x 500) for required maintenance (1.....255)	000
	P066		Selection of operating flashing light output: If=0 intermittent flashing light output; If=1 Fixed flashing light output (for flashing lights with intermittent interior circuits).	• 000: “intermittent flashing light output • 001: “fixed flashing light output	000
	P067	SAFETY 1	Operation of the SFT input: if = 0 safety edge always enabled, if = 1 safety edge enabled only while closing, if = 2 safety edge enabled only while closing and before any movement, if = 3 safety edge enabled only when opening, if = 4 safety edge enabled only while opening and before any movement; as for the obstacle detection with internal anti-crushing sensor, also the activation of the inputs SFT1 and SFT2 causes the complete or partial reversal as set by P055 (duration of inversion on obstacles while opening, and P056 (duration of reversal on obstacle while closing)	• 000: “safety edge always enabled • 001: “safety edge enabled only while closing • 002: “safety edge enabled only while closing and before any movement • 003: “safety edge enabled only when opening • 004: “safety edge enabled only while opening and before any movement	000
	P068	SAFETY 2			000
	P069		Delay on limit switch detection: the operation is stopped after 1,5 sec from limit switch detection. When during this delay a stop is detected, the operator is suddenly stopped	• 000: “limit switch delay disabled • 001: “limit switch delay enabled	000
	P070		Adjustment of acceleration durability **Warning:** if soft start is activated, the acceleration is deactivated indipendently from P070 value.	• 000: “acceleration deactivated (it runs an acceleration of minimum durability, almost imperceptible) • 00X: “adjusts the acceleration durability at 1,5 sec (X*6 ms)	200
	P071		Unused parameter		/
	P072		Unused parameter		/
	P073		Unused parameter		/
	P074		Unused parameter		/
	P075		Unused parameter		/

1

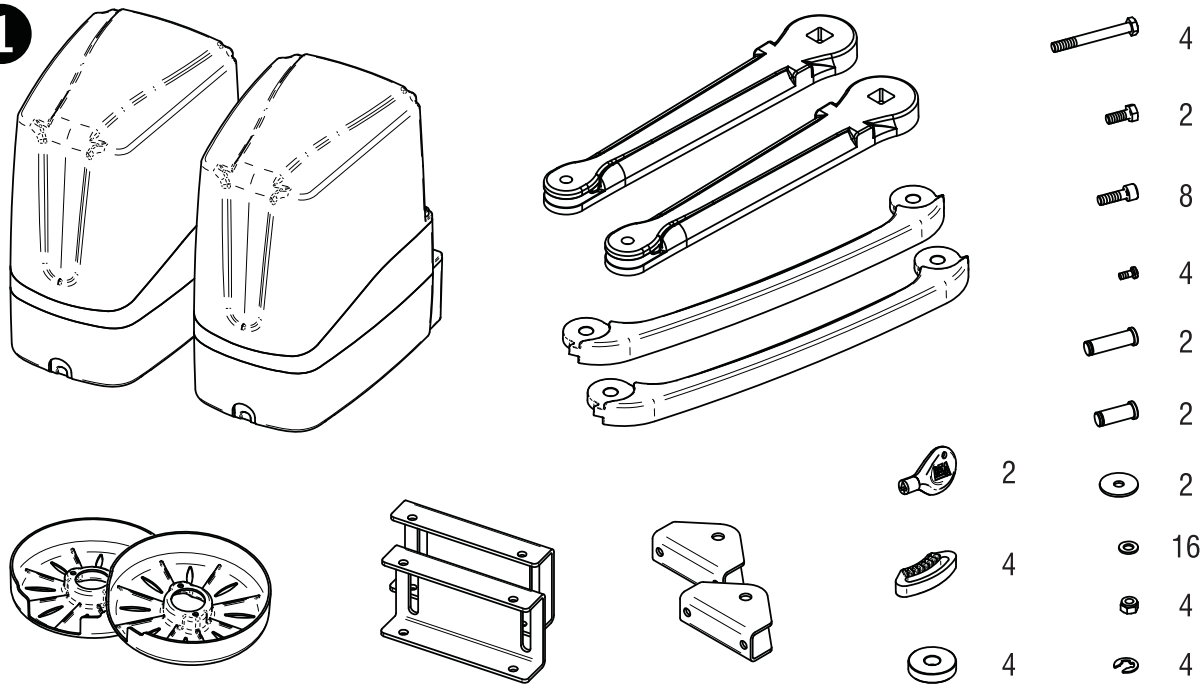
4
2
8
4
2
2
2
2
16
4
4
4
4

2

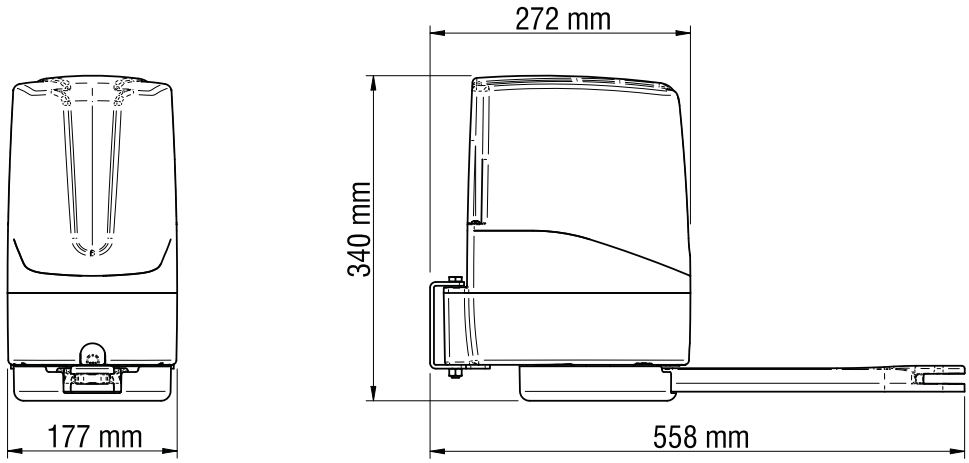
272 mm
340 mm
177 mm
558 mm

3

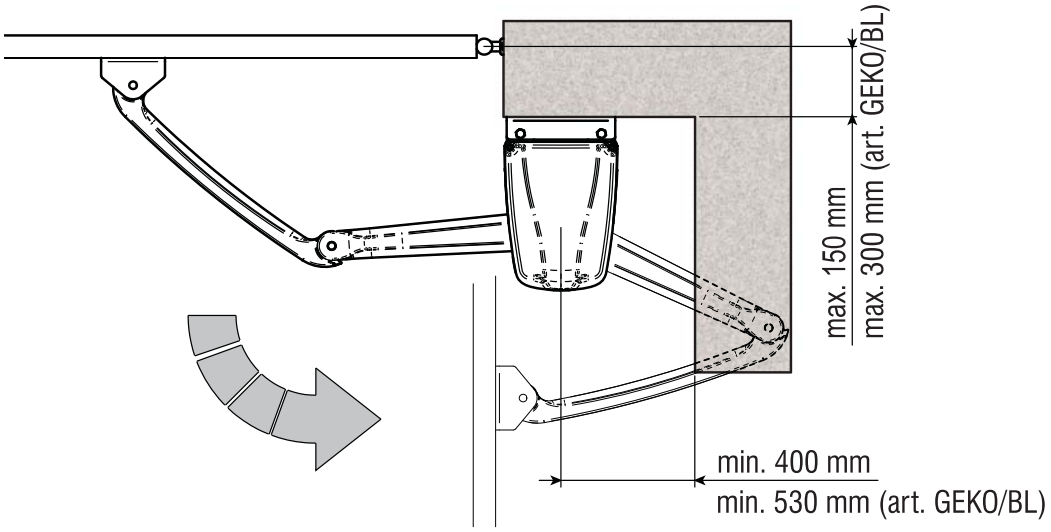
max. 150 mm
max. 300 mm (art. GEKO/BL)
min. 400 mm
min. 530 mm (art. GEKO/BL)

4

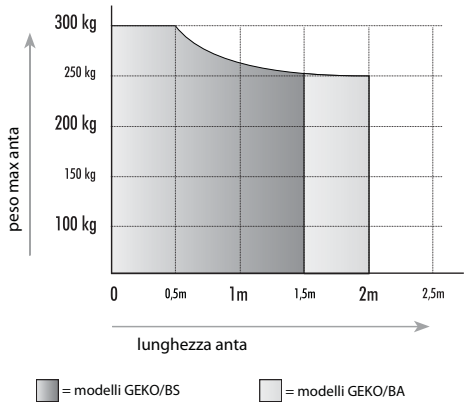

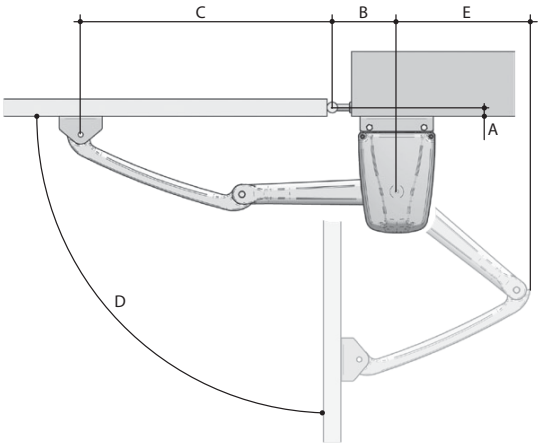

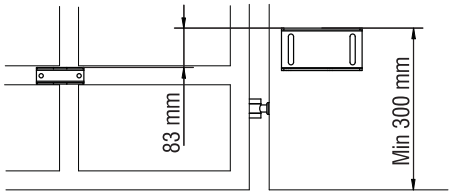

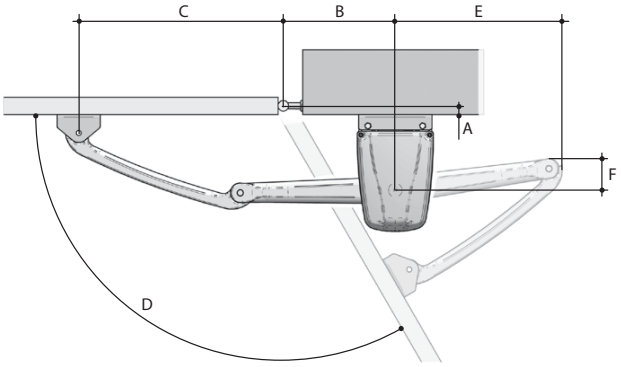

A	B	C	D	E	F
20	150	585	90°	310	-
50	150	580	90°	320	-
100	150	565	90°	335	-
120	150	560	90°	340	-
150	150	550	90°	345	-
180	150	540	90°	342	-
200	150	530	90°	340	-
200 *	150	750	90°	470	-
250 *	150	800	90°	480	-
300 *	150	800	90°	490	-
0	250	485	120°	390	62
0 ÷ 20	160	575	100°	360	-
0 ÷ 20	200	535	110°	390	-
20	260	475	120°	390	75
50	160	565	100°	375	-
50	220	510	110°	390	-

*** Art. GEKO_BL**

Art. GEKO_BLA					
A	**B**	**C**	**D**	**E**	**F**
50	150	780	90°	365	-
100	150	770	90°	380	-
150	150	750	90°	390	-
180	150	730	90°	385	50

5

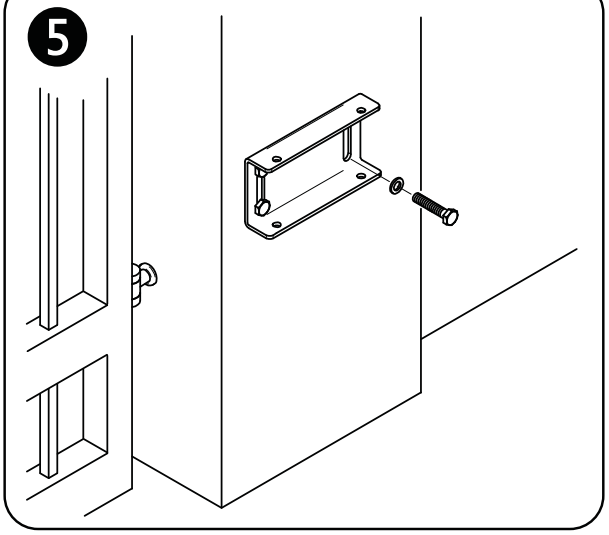

6

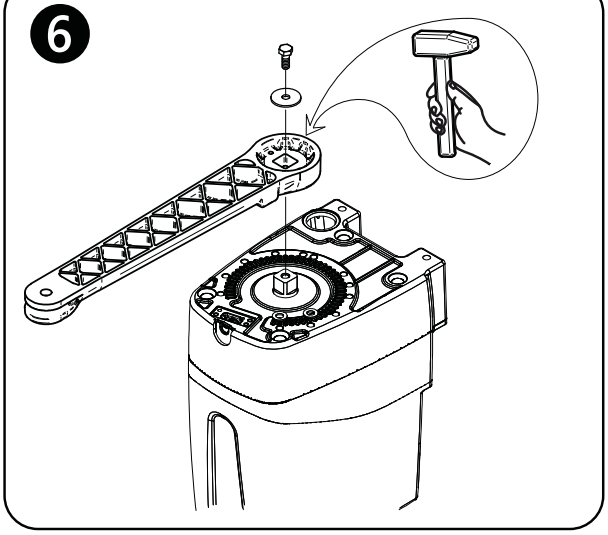

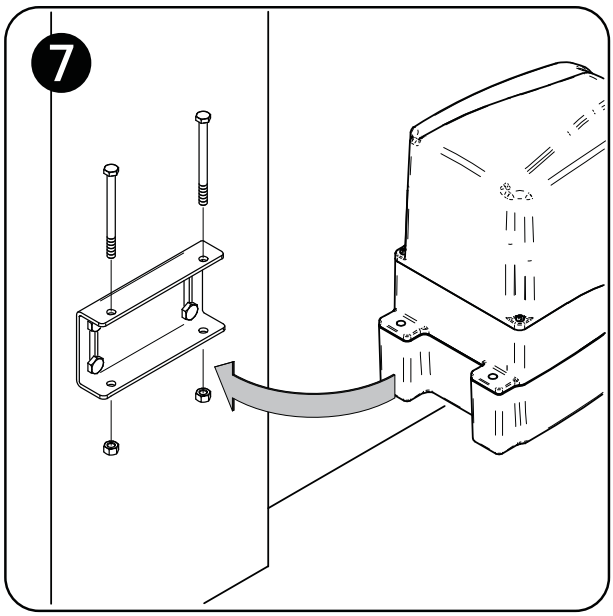
7

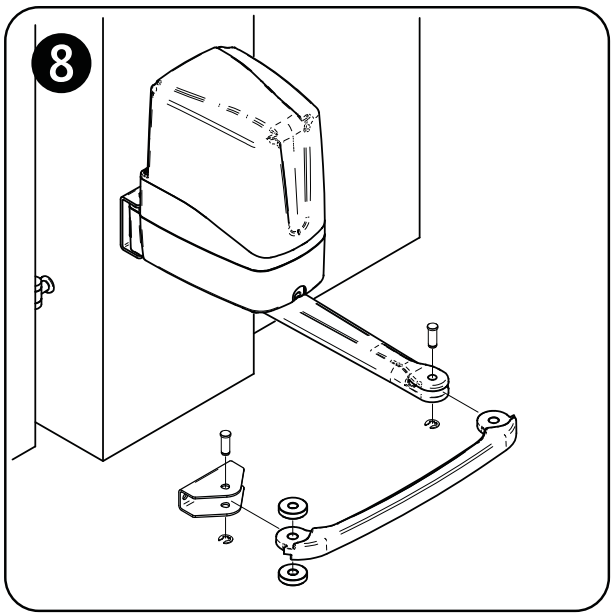
8

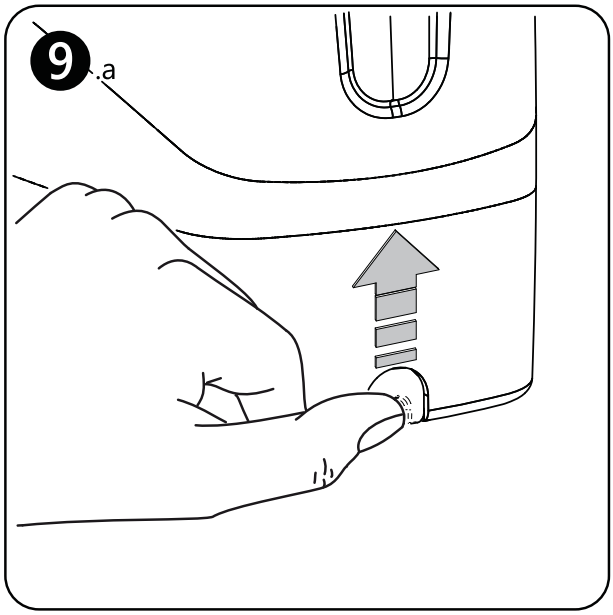
9.a

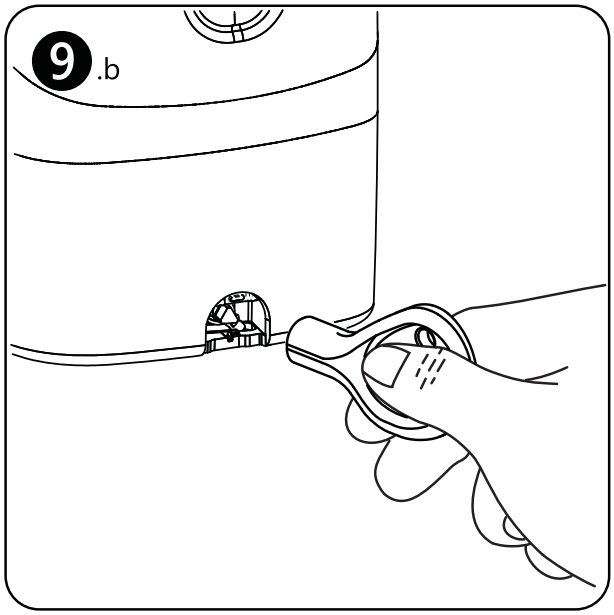
9.b

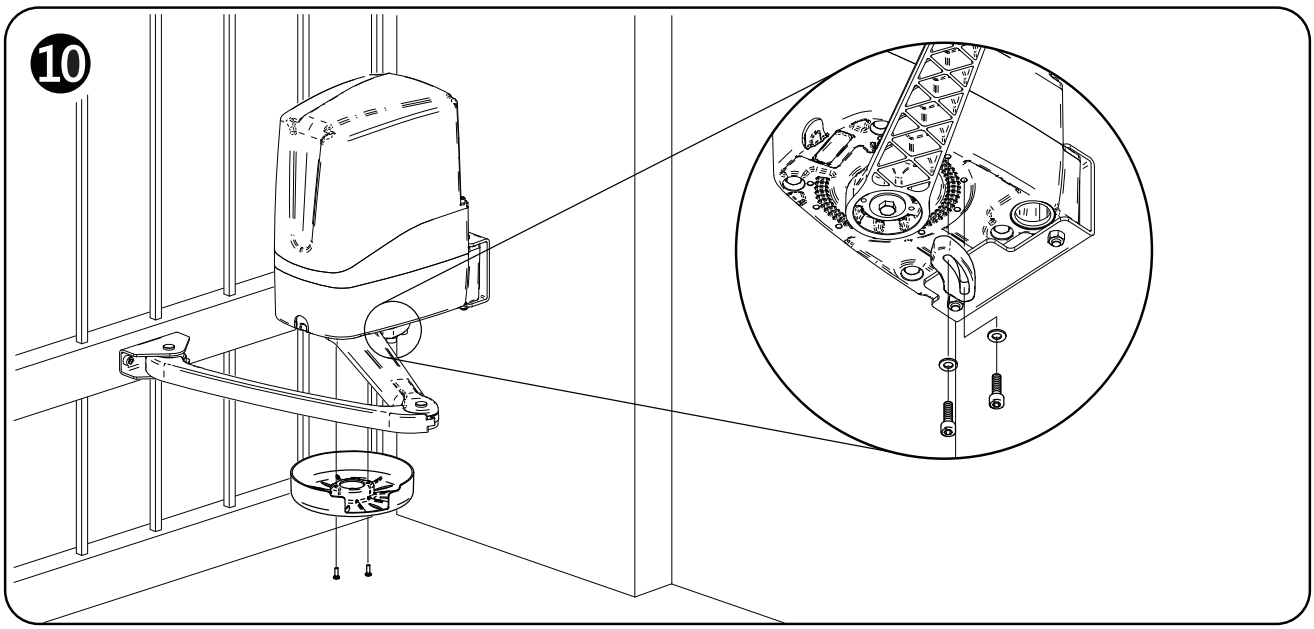
10

Esploso di assemplaggio, **Assembly** diagram, **Schéma** de montage,
Esquema de montaje, **Esquema** de montagem, **Części** zamienne

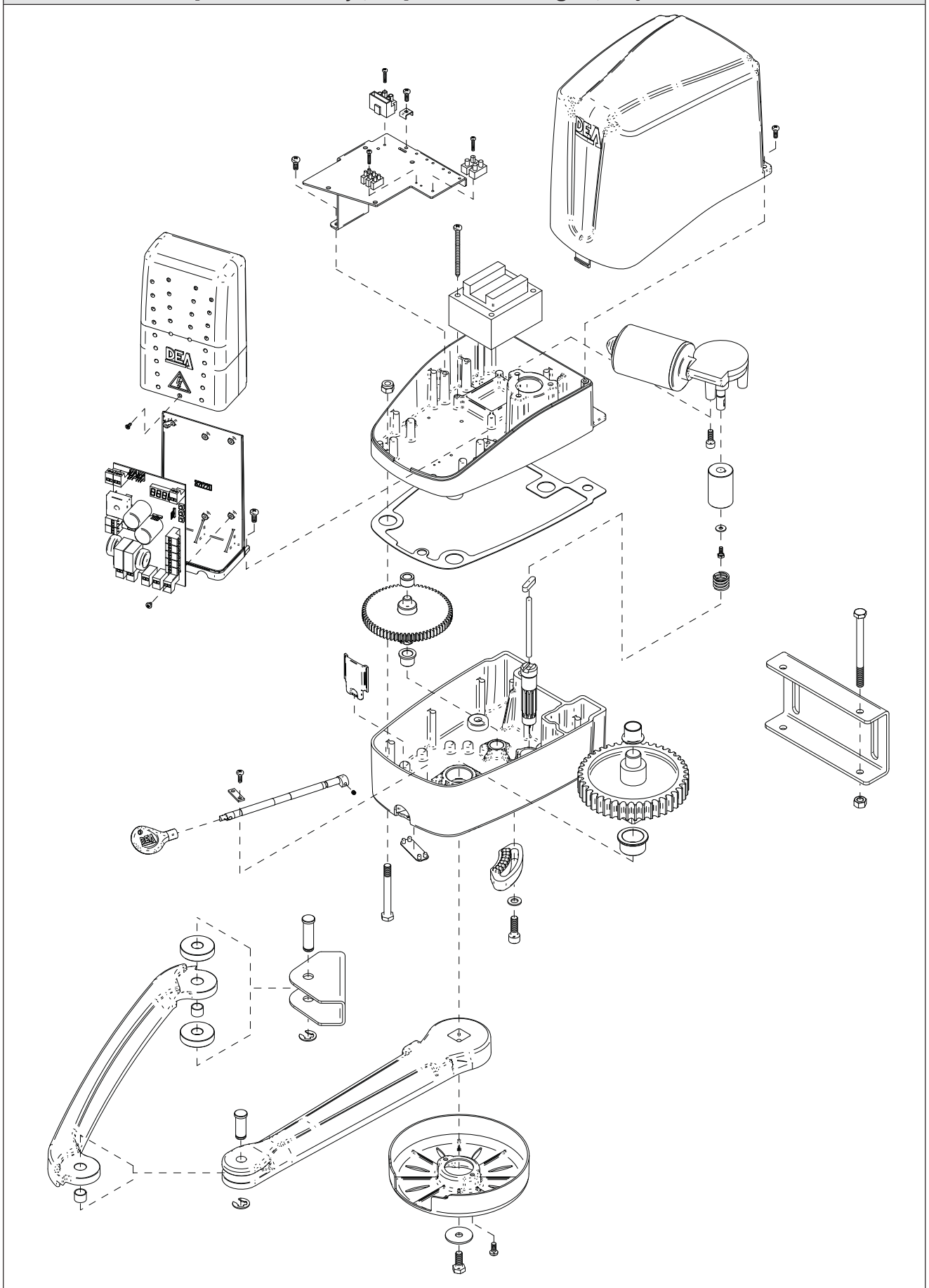

Accessori prodotto, Product accessories, Accessoires Produit, Accesorios producto, Acessórios produto, Produkt akcesoria

Article Code	Descrizione - Description - Description - Descripción - Descrição - Opis	
GEKO/BA 629260		Braccio articolato in alluminio Aluminium articulated arm Bras articulé aluminium Brazo articulado de aluminio Braço articulado em alumínio Ramię łamane aluminiowe
GEKO/BS 629261		Braccio a slitta Rail sliding arm Bras glissière Brazo de patín Braço em guia Ramię ślizgowe
GEKO/BL 629262		Braccio lungo articolato in ferro Long arm for Geko, iron made Bras long pour Geko en fer Brazo largo para Geko de hierro Braço longo para Geko em ferro Długie ramię dla Geko żelaza
GEKO/BLA 629263		Braccio lungo articolato in alluminio Long arm for Geko, aluminium made Bras long pour Geko en aluminium Brazo largo para Geko de aluminio Braço longo para Geko em aluminio Długie ramię dla Geko aluminium
GEKO/SF 629280		Cordino sblocco a filo per Geko Lanyard release by cable for Geko Dispositif de déverrouilage par câble pour Geko Cuerda para desbloqueo de hilo para Geko Desbloqueio por cabo para Geko Linka odblokowania do Geko
BAT KIT 629290		Kit batterie per 24V Batteries Kit for 24V Kit batterie pour 24V Kit baterías para 24V Kit de baterias para 24V Zestaw akumulatorów na 24V

move as you like

NOTES

GEKO

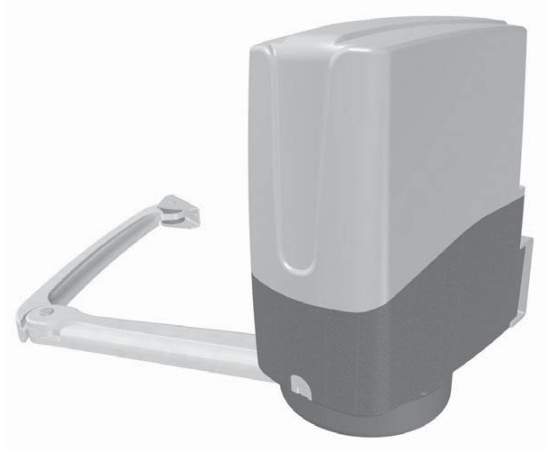

IT

ISTRUZIONI PER L'UTENTE FINALE

Questa guida è espressamente realizzata per gli utenti dell'automatismo; l'installatore ha il compito di consegnarla ed illustrarla ad un responsabile dell'impianto il quale si preoccuperà dell'informazione a tutti gli altri utenti. E' importante che queste istruzioni siano conservate e rese facilmente disponibili.

Una buona manutenzione preventiva ed una regolare ispezione al prodotto ne assicurano una lunga durata. Contattare regolarmente l'installatore per la manutenzione programmata ed in caso di guasto.

REGOLE DI SICUREZZA

1. Durante il funzionamento dell'automatismo rimanere sempre ad una adeguata distanza di sicurezza e non toccare alcun elemento.
2. Impedire ai bambini di giocare nelle immediate vicinanze dell'automatismo.
3. Eseguire i controlli e le ispezioni previste nel programma di manutenzione; nel caso di funzionamento anormale non utilizzare l'automatismo.
4. Non smontare parti! Le operazioni di manutenzione e riparazione devono essere eseguite da personale qualificato
5. Può accadere che l'operazione di sblocco si debba realizzare in situazioni di emergenza! Istruire bene tutti gli utenti sul funzionamento dello sblocco e sull'ubicazione delle chiavi di sblocco.

SBLOCCO DI GEKO

Tutti i modelli di GEKO sono dotati di un dispositivo di sblocco; il cui funzionamento è:

1. **Togliere alimentazione elettrica;**
2. Sollevare lo sportellino di copertura (Fig. 9.a), inserire la chiave di sblocco e ruotare in senso orario (Fig. 9.b);
3. Il procedimento inverso riporta GEKO in condizioni di lavoro.

ATTENZIONE: Durante l'operazione di sblocco la porta può presentare movimenti incontrollati: prestare la massima attenzione al fine di evitare ogni possibile rischio.

PULIZIA ED ISPEZIONI

L'unica operazione che l'utente può e che deve fare è quella di rimuovere da GEKO foglie, rami e ogni altro detrito che ne ingombri il movimento. Attenzione! Operare sempre in mancanza di tensione!

CONDIZIONI DI GARANZIA

La garanzia sui nostri prodotti è di 24 mesi dalla data di installazione. La garanzia è limitata esclusivamente alla riparazione o sostituzione gratuita dei pezzi riconosciuti difettosi. La garanzia non è valida se i prodotti sono stati manomessi, modificati, installati in modo non corretto o privi di etichetta di identificazione con codice e data di produzione.

EN

INSTRUCTIONS FOR THE FINAL USER

This guide has been prepared for the final users of the automatism; the installer is required to deliver this guide and illustrate its contents to the person in charge of the system. The latter must then provide similar instruction to all the other users. These instructions must be carefully conserved and easily available for consultation when required.

Good preventive maintenance and frequent inspection ensures the long working life of the product. Contact the installer regularly for routine maintenance and in event of anomaly.

SAFETY RULES

1. Always keep a safe distance from the automatism during operation and never touch any moving part.
2. Prevent children from playing near the automatism.
3. Perform the control and inspection operations prescribed in the maintenance schedule and immediately stop using the automatism whenever signs of malfunction are noted.
4. Never disassemble parts of the product! All maintenance and repair operations must be performed only by qualified personnel.
5. The release operation must sometimes be performed in emergencies! All users must be instructed on the use of the release mechanism and the location of the release keys.

GEKO RELEASE MECHANISM

All GEKO models are equipped with a release device which must be operated as follows:

1. **Disconnect the power supply;**
2. Lift the cover window (Pic. 9a) and, after having inserted the unlocking key, rotate clockwise until it stops (Fig. 9b);
3. The opposite procedure returns GEKO operator to normal working conditions.

WARNING: During this operation gate may present uncontrolled movement: operate with extra care so to avoid any risk.

CLEANING AND INSPECTIONS

The only operation that the user can and must do is to remove branches, leaves, and any other object that might obstruct the gate's free movement. Warning! Always disconnect the power supply whenever performing operations on the gate!

TERMS OF WARRANTY

Our products are covered by warranty for 24 months from the date of installation. Coverage is limited exclusively to the free repair or replacement of parts recognised as defective. Warranty coverage will not be provided whenever the products have been tampered with, modified or installed incorrectly or whenever the identification labels with the respective codes and production dates are missing.

FR

INSTRUCTIONS POUR L'UTILISATEUR FINAL

Ce guide a été réalisé exprès pour les utilisateurs de l'automatisation. L'installateur doit le remettre et le commenter à un responsable de l'installation, qui répercutera l'information à tous les autres utilisateurs. Il est important de garder ces instructions, et elles doivent être facilement accessibles.

Une bonne maintenance préventive et une inspection régulière du produit assurent sa longue durée. Contactez l'installateur régulièrement pour la maintenance programmée, et en cas de panne.

RÈGLES DE SÉCURITÉ

1. Pendant le fonctionnement de l'automatisation restez toujours à une certaine distance de sécurité, et ne touchez aucun élément.
2. Empêchez les enfants de jouer dans les alentours immédiats de l'automatisation.
3. Effectuez les vérifications et les inspections prévues dans le programme de maintenance. En cas de fonctionnement anormal, n'utilisez pas l'automatisation.
4. Ne démontez pas les pièces! Les opérations de maintenance et de réparation doivent être exécutées par du personnel qualifié.
5. Il peut arriver que l'opération de déverrouillage doive se dérouler dans des situations d'urgence! Instruisez bien tous les utilisateurs sur le fonctionnement du déverrouillage et sur la position des clefs de déverrouillage.

DÉVERROUILLAGE DE GEKO

Tous modèles de GEKO sont équipés d'un dispositif de déverrouillage; le fonctionnement de ce dispositif est illustré ci-après:

1. **Couper l'alimentation;**
2. Soulevez la trappe de visite (Fig. 9.a) et, après avoir inséré la clef de déverrouillage, tournez dans le sens des aiguilles d'une montre jusqu'à son arrêt (Fig. 9.b);
3. Le procédé inverse, ramène GEKO dans ses conditions de travail.

ATTENTION: Pendant l'opération de déverrouillage la porte peut présenter de mouvements incontrôlés: faites beaucoup d'attention au fin d'éviter toutes risques.

NETTOYAGE ET INSPECTIONS

La seule opération que l'utilisateur peut et doit faire est de débarrasser GEKO des feuilles, des brindilles et de tout autre détritus qui pourrait entraver sa manoeuvre. Attention! Opérez toujours quand la tension est coupée!

CONDITIONS DE GARANTIE

La garantie sur nos produits est de 24 mois à compter de la date d'installation. La garantie concerne exclusivement la réparation ou le remplacement gratuit des pièces qui ont été reconnues défectueuses. La garantie n'est pas valable si les produits ont été manipulés, modifiés, installés d'une manière incorrecte ou débarrassés de leur étiquette d'identification portant leur code et la date de production.

ES

INSTRUCCIONES PARA EL USUARIO FINAL

Esta Guía se ha realizado expresamente para los usuarios del automatismo; el instalador tiene el deber de entregarla y explicarla a un responsable de la instalación quien se preocupará de informar a todos los demás usuarios. Es importante guardar estas instrucciones y que estén siempre disponibles.

Un buen mantenimiento preventivo y una regular inspección del producto aseguran su larga duración. Contactar regularmente al instalador para el mantenimiento programado y en caso de avería.

REGLAS DE SEGURIDAD

1. Durante el funcionamiento del automatismo, situarse siempre a una adecuada distancia de seguridad y no tocar ningún elemento.
2. Impedir que los niños jueguen en las inmediatas cercanías del automatismo.
3. Realizar los controles y las inspecciones previstas en el programa de mantenimiento; si el funcionamiento fuera anormal, no utilizar el automatismo.
4. No desmontar ninguna parte. Las operaciones de mantenimiento y reparación deben efectuarlas personal autorizado.
5. Es posible que la operación de desbloqueo deba realizarse en situaciones de emergencia. Todos los usuarios tienen que estar debidamente instruidos sobre el funcionamiento del desbloqueo y sobre la ubicación de las llaves de desbloqueo.

DESBLOQUEO DE GEKO

Todos los modelos de GEKO incorporan un dispositivo de desbloqueo; el funcionamiento de este dispositivo es el siguiente:

1. **Desconectar la alimentación eléctrica;**
2. Levantar la puerta de cobertura (Fig. 9.a) y, después de la introducción de la llave de desbloqueo, girarla en el sentido de las agujas del reloj hasta su parada (Fig. 9.b);
3. El procedimiento inverso lleva el GEKO en condiciones de trabajo.

ATENCIÓN: Durante la operación de desbloqueo, la puerta puede presentar movimientos incontrolados: prestar la máx atención al fin de evitar un posible riesgo.

LIMPIEZA E INSPECCIONES

La única operación que el usuario puede y debe hacer es la de retirar de GEKO las hojas, ramas y otros residuos que impidan sus movimientos. ¡Atención! Estas operaciones deben efectuarse tras haber desconectado el suministro eléctrico.

CONDICIONES DE GARANTÍA

La garantía de nuestros productos dura 24 meses desde la fecha de instalación. La garantía se limita exclusivamente a la reparación o sustitución gratuita de las piezas reconocidas defectuosas. La garantía no es válida si los productos han sido forzados, modificados, instalados incorrectamente o carentes de etiqueta de identificación con código y fecha de producción.

PT

INSTRUÇÕES PARA O UTILIZADOR FINAL

Este guia foi expressamente realizado para os utilizadores do automatismo; o técnico de instalação tem a tarefa de entregá-lo e explicá-lo a um responsável pelo equipamento, que se encarregará pela informação a todos os demais utilizadores. É importante guardar e manter estas instruções de maneira que estejam facilmente disponíveis. Uma boa manutenção preventiva e uma regular inspecção do produto asseguram ao mesmo uma longa durabilidade. Contacte periodicamente o técnico de instalação acerca da manutenção programada e caso haja avarias.

REGRAS DE SEGURANÇA

1. Durante o funcionamento do automatismo permaneça sempre a uma adequada distância de segurança e não toque nenhum dos componentes.
2. Impeça que crianças brinquem nas proximidades do automatismo.
3. Efectue as verificações e as inspecções previstas pelo programa de manutenção; no caso de funcionamento anormal não utilize o automatismo.
4. Não desmonte nenhuma peça! As operações de manutenção e reparação devem ser efectuadas por pessoal qualificado.
5. Pode ser necessário efectuar uma operação de desbloqueio em situações de emergência! Instrua bem todos os utilizadores acerca do funcionamento do desbloqueio e da localização das chaves de desbloqueio.

DESBLOQUEIO DO GEKO

Todos os modelos de GEKO são equipados com dispositivo de desbloqueio; o funcionamento deste dispositivo é o seguinte:

1. **Tirar a alimentação eléctrica;**
2. Levante a tampa (Fig. 9.a) e depois de inserir a chave para abrir, gire no sentido horário até parar (Fig. 9.b);
3. O procedimento contrário torna a trazer GEKO em condições de trabalho.

ATENÇÃO: Durante a operação de desbloqueio a porta pode ter movimentos incontroláveís: fazer atençã ao fim de evitar todos perigos.

LIMPEZA E INSPECÇÕES

A única operação que o utilizador pode e deve efectuar é retirar do GEKO: folhas, ramos e todos os demais detritos que atrapalhem o seu movimento. Atenção! Realize estas operações com a alimentação eléctrica à máquina desligada!

CONDIÇÕES DE GARANTIA

A garantia dos produtos da DEA System é de 24 meses a partir da data de instalação. Esta garantia é limitada exclusivamente à reparação ou substituição gratuita das peças reconhecidas como defeituosas. Esta garantia não é válida se os produtos tiverem sido alterados, modificados, instalados de maneira não correcta ou estejam sem a etiqueta de identificação que contém o código e a data de produção.

PL

INSTRUKCJE DLA UŻYTKOWNIKA KOŃCOWEGO

Niniejszy przewodnik jest sporządzony dla użytkowników automatyki; instalator ma za zadanie przekazać go osobie odpowiedzialnej za zainstalowaną automatykę oraz przeszkolić ją w zakresie prawidłowej obsługi. Osoba ta powinna przekazać uzyskane informacje pozostałym użytkownikom automatyki. UWAGA: Ważnym jest, dla bezpieczeństwa osób, przestrzegać tej instrukcji i zachować ją by była łatwo dostępna. Prawidłowe konserwacja i przestrzeganie terminów przeglądów produktu gwarantują jego długi okres użytkowania. W celu planowanych przeglądów oraz napraw, kontaktować się z instalatorem.

ZASADY BEZPIECZEŃSTWA

1. Zaleca się, aby podczas działania automatyki pozostawać zawsze w bezpiecznej odległości oraz nie dotykać ruchomych elementów.
2. Zaleca się, aby osobom które maja ograniczone zdolności ruchu, czucia oraz umysłowe nie pozwalać zbliżać się do systemu kontrolnego. Zabrania się bawić dzieciom w bliskiej odległości automatyki.
3. Zaleca się, przeprowadzać regularnie kontrole zasygnalizowane w paragrafie “CZYSZCZENIE I PRZEGLĄDY”; w przypadku nieprawidłowego działania nie używać automatyki.
4. Nie wymontowywać części produktu! Działania konserwacyjne i naprawcze muszą być wykonane przez wykwalifikowany personel.
5. Może się zdarzyć, że operację odblokowania trzeba wykonać w w sytuacji wyjątkowej! Przeszkolić wszystkich użytkowników w zakresie działania odblokowania oraz poinformować gdzie znajdują się klucze do odblokowania.

ODBLOKOWANIE SIŁOWNIKA GEKO

Dostępne modele siłownika GEKO są wyposażone w urządzenie odblokowujące. W celu odblokowania należy postępować zgodnie z poniższymi wskazówkami:

1. **Odłączyć zasilanie elektryczne;**
2. Podnieść przykrywkę (rys. 9.a), włożyć klucz odblokowania i przekręcic go zgodnie ze wskazówkami zegara (rys. 9.b);
3. Proces odwrotny przywróci siłownik GEKO do pracy.

UWAGA: Podczas operacji odblokowania siłownika, skrzydło bramy może się poruszać w sposób niekontrolowany, trzeba na to zwrócić szczególną uwagę w celu wyeliminowania powstania jakiegokolwiek niebezpieczeństwa.

CZYSZCZENIE I PRZEGLĄDY

Jedyna operacja jaką użytkownik powinien wykonać, jest oczyszczenie siłownika GEKO z liści, gałęzi i innych elementów które uniemożliwiają jego prawidłowy ruch. Uwaga! Czyścić zawsze przy odłączonym zasilaniu!

WARUNKI GWARANCJI

Na urządzenia DEA SYSTEM przysługuje 24-miesięczna gwarancja począwszy od dnia montażu. Gwarancja dotyczy tylko i wyłącznie napraw lub bezpłatnej wymiany części wadliwych. Gwarancji nie podlegają uszkodzenia powstałe w wyniku niewłaściwego użytkowania, nieodpowiedniego montażu, zmian konstrukcyjnych dokonanych przez użytkownika oraz gdy nie posiadają etykiety identyfikacyjnej z kodem oraz datą produkcji.

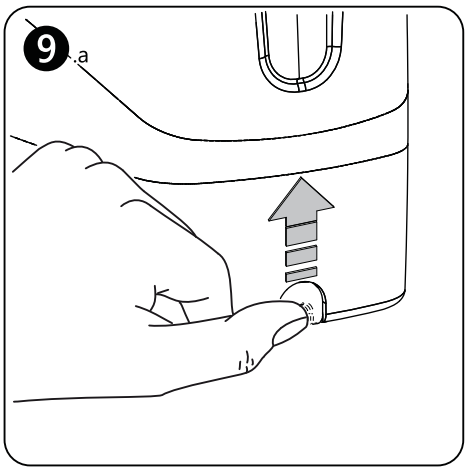

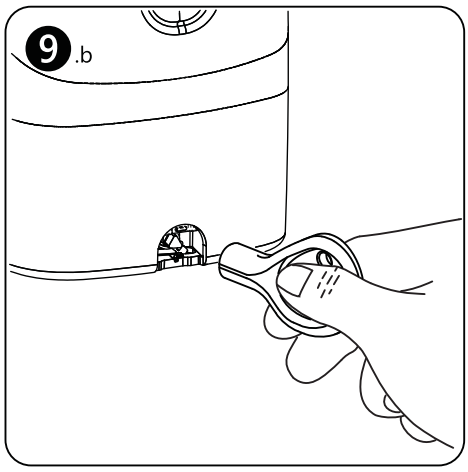

DEA SYSTEM S.p.A. - Via Della Tecnica, 6 - ITALY - 36013 PIOVENE ROCCHETTE (VI)
tel. +39 0445 550789 - fax +39 0445 550265 - Internet http:\\www.deasystem.com - e-mail: deasystem@deasystem.com

Questo manuale è stato realizzato utilizzando carta ecologica riciclata certificata Ecolabel per contribuire alla salvaguardia dell'ambiente.

This manual was printed using recycled paper certified Ecolabel to help save the environment.

Ce manuel a été réalisé en utilisant du papier recyclé certifié Ecolabel afin de respecter l'environment.

El manual ha sido fabricado utilizando papel reciclado certificado Ecolabel para preservar el medio ambiente.

Este manual foi impresso com papel reciclado certificado Ecolabel para ajudar a preservar o meio ambiente.

W celu wsparcia ochrony środowiska, niniejszą instrukcję zrealizowaliśmy wykorzystując papier ekologiczny pochodzący z recyklingu i posiadający certyfikat Ecolabel.

DEA SYSTEM S.p.A. - Via Della Tecnica, 6 - ITALY - 36013 PIOVENE ROCCHETTE (VI)
tel. +39 0445 550789 - fax +39 0445 550265 - Internet http:\\www.deasystem.com - e-mail: deasystem@deasystem.com