Operatore oleodinamico per cancelli ad anta battente

Istruzioni d'uso ed avvertenze

Hydraulic operator for swing gates

Operating instructions and warnings

Opérateur hydraulique pour portails battants

Notice d'emploi et avertissements

Operador oleodinámico para puertas con hoja batiente

Instrucciones de uso y advertencias

Operador hidráulico para portões de folha batente

Instruções para utilização e advertências

DEA®

BATTENTE

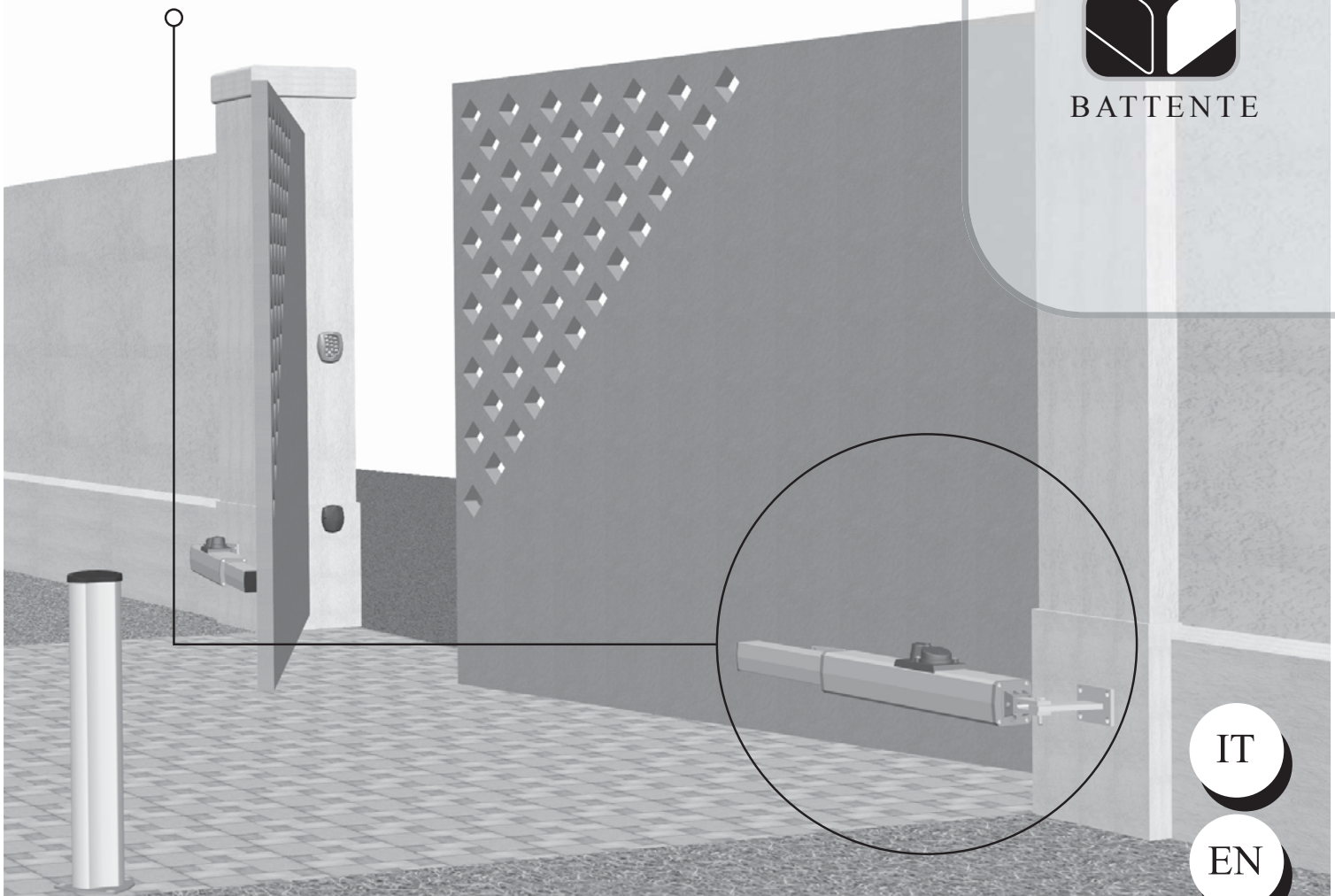

IT

EN

FR

ES

PT

OLI 600

I6240XX Rev 08 18-05-12

IT UTILIZZO DEL LIBRETTO

Per facilitare la comunicazione e la rintracciabilità di particolari importanti informazioni all'interno del testo DEA System adotta la simbologia riportata.

EN USE OF THIS BOOKLET

In order to facilitate communication and the traceability of particularly important parts of the text, DEA System adopts the symbols provided.

FR UTILISATION DE CE LIVRET

Pour faciliter la communication et le repérage de renseignements spéciaux et importants à l'intérieur du texte, DEA System a adopté la symbologie indiquée.

ES UTILIZACIÓN DEL MANUAL

Para facilitar la comunicación y la trazabilidad de informaciones de particular importancia, DEA System adopta, en el interior del texto, la simbología reproducida.

PT UTILIZAÇÃO DO FOLHETO

Para facilitar a comunicação e localizar pormenores importantes de informações no interior do texto, a DEA System adoptou os símbolos apresentados.

	Avvertimento Warning Avertissement Advertencia Advertência
	Pericolo Danger Danger Peligro Perigo
	Consultazione Consultation Consultation Consultación Consulta
	Osservazione Observation Observation Observación Observação
	Ispezione Inspection Inspection Inspección Inspecção
	Certificazione Certification Certification Certificación Certificado

La Dichiarazione di Incorporazione può essere consultata sul sito

The Declaration of Incorporation may be consulted by entering

La Déclaration d'Incorporation peut être vérifié à l'adresse

La Declaracion de Incorporación puede ser consultada en la dirección de internet

A Declaração de Incorporação pode ser consultada em

Deklarację Włączenia można skonsultować wchodząc na stronę

http://www.deasystem.com/area-download

Nome ed indirizzo della persona autorizzata a costituire la Documentazione Tecnica pertinente:

DEA SYSTEM S.p.A.
Via Della Tecnica, 6
36013 PIOVENE ROCCHETTE (VI) - ITALY

LIEVORE TIZIANO
Amministratore

OLI 600

Hydraulic operator for swing gates
Operating instructions and warnings

ENGLISH

INDEX

Declaration by manufacturer 1
OVERVIEW.....8
1 PRODUCT CONFORMITY.....8
2 RESIDUAL RISK WARNINGS 8
3 MODELS AND CONTENTS OF THE PACKAGE...9
4 OPERATING INSTRUCTIONS 9
4.1 Product description.....9
4.2 Technical data.....9
4.3 Labelling information.....9
4.4 Suitable conditions of use 9
4.5 Instructions for risk-free operation 10
4.5.1 Transport – 10
4.5.2 Installation, assembly and disassembly – 10
4.5.3 Starting – 10
4.5.4 Use – 10
4.5.5 Adjustment – 10
4.5.6 Maintenance and repair – 10
4.6 Training 11
4.7 Not suitable use.....11
5 SPARE PARTS LIST.....11
6 COMPLETE CLOSING ASSEMBLY 11
6.1 Minimum level of protection provided by the safety edge.....11
6.2 Crushing in the opening area 11
6.3 Impact in the opening/closing area....12
Example of typical installation 32

ANNEXES
- **Instructions for the final user**
- **Terms of warranty**

OVERVIEW

SCOPE OF THE INSTRUCTIONS

These instructions were prepared by the manufacturer and are an integral part of the product. The operations described are intended for adequately trained and qualified users and must be carefully read and conserved for future reference.

Chapters "2 RESIDUAL RISK WARNINGS" and "4 OPERATING INSTRUCTIONS" contain all the information that **DEA** System provides in order for the product to constantly satisfy the Essential Safety Requirements prescribed by the Machinery Directive (European Directive 2006/42/CE).

Read these chapters carefully because they contain important instructions for safe installation, use and maintenance and important warnings regarding the residual risks remaining even after all the safety devices and measures described have been applied.

The product is designed for installation in complete closing systems subject to specific legislation. Chapter 6 "COMPLETE CLOSING ASSEMBLY" provides useful information for the respect of the Essential Safety Requisites for special types of closing.

1 PRODUCT CONFORMITY

DEA System guarantees the conformity of the product to European Directives 2006/42/CE regarding machinery safety, 2004/108/CE electromagnetic compatibility and 2006/95/CE low voltage electrical equipment. **DEA** System also encloses the manufacturer's Declaration of Conformity with these instructions (see Directive 2006/42/CE Art. 4, paragraph 2).

2 RESIDUAL RISK WARNINGS

Read these warnings carefully; the failure to respect the following warnings can create risk situations. In particular, the manufacturer urges the absolute respect of "WARNING A5" regarding the importance of not removing the O-ring in the release mechanism.

WARNING The use of the product under unusual conditions not foreseen by the manufacturer can create situations of danger, and for this reason all the conditions prescribed in these instructions must be respected. A1

WARNING Under no circumstances must the product be used in explosive atmospheres or surroundings that may prove corrosive and damage parts of the product. A2

WARNING The use of spare parts not indicated by **DEA** System and/or incorrect re-assembly can create risk to people, animals and property and also damage the product. For this reason, always use only the parts indicated by **DEA** System and scrupulously follow all assembly instructions.

WARNING Disassemble the gate operator from its attachments only after first making sure that there is no pressure remaining inside the pump/cylinder. A4

WARNING The removal of the O-ring in the release mechanism may cause water infiltrations into the oil tank, which may damage the product or result in malfunctioning. Always make sure the O-ring is installed. A5

WARNING The stopper that protects the rod (see Point 1 in F1 Page 30) has been designed to guarantee protection against the crushing of the fingers. Under no circumstances must this device be tampered with by locking it in place with screws, for example, thereby creating serious risk! A6

WARNING Water or other substances may enter the oil tank during adjustment operations and cause pump damage and malfunction. Therefore pay careful attention to any such foreign matter in the vicinity and remember to re-position the release lever after adjustment has been completed. A7

WARNING All the other adjustment/setting operations beyond the adjustment of the oil flow are made by the manufacturer. Tampering with these settings may cause malfunction and/or situations of risk to people, animals and property. Refrain from performing any operations not authorised by **DEA** System. A8

WARNING In line with EU Directive 2002/96/EC for waste electrical and electronic equipment (WEEE), this electrical product must not be disposed of as unsorted municipal waste. Please dispose of this product by returning it to your local municipal collection point for recycling.

WARNING Awareness of the operation of the OLI 600 key-release mechanism (see F4 Page 30) is essential for all users of the automatism because the failure to use the device quickly during emergencies can jeopardise people, animals and property. Enclosure I to these instructions, which the installer is required to deliver to the final user, illustrates operation and can be detached. A10

3 MODELS AND CONTENTS OF THE PACKAGE

The name OLI 600 identifies a series of hydraulic gate operators with different features depending on dimension (stroke), speed, reversibility, and blocks.

The **DEA** System articles in the series are:

Article	No. of blocks/ revers.	stroke	speed
602	1 (closing)	270	fast
603	2	270	fast
604	reversible	270	fast
605	2	400	fast
606	reversible	400	fast
602L	1 (closing)	270	slow
603L	2	270	slow
604L	reversible	270	slow
605L	2	400	slow
606L	reversible	400	slow

The OLI 600 gate operator is completed by the set of optional accessories below:

Article	Description	
0/652		Fastening supports with welded plate
0/653		Standard fastening supports
0/351		Plate 100x60
600 H		Hydraulic oil: 1 liter

Inspect the "Contents of the Package" on Page 30 and compare it with your product for useful consultation during assembly.

4 OPERATING INSTRUCTIONS

In compliance with Directive 2006/42/CE Enclosure I, Point 1.7.4.

4.1 Product description

The OLI 600 hydraulic operator for swing gate automation is composed essentially by a pump in an oil bath that drives a cylinder. The pump is driven by a single-phase electric motor (see F1, Page 30).

4.2 Technical data

Single-phase power supply	230 V ±10% 50 Hz
Absorbed power	170 Watt
Max. pressure	40 bar
Rated operating pressure	20 bar
Work cycle	intensive
Thrust force at 20 Bar	3200 N
Traction force at 20 Bar	2600 N
Max. stroke	270 / 400 mm
Max. distance between attachments	1000 mm
Weight of product filled with oil OLI 602, 603, 604 OLI 605, 606	 11,4 Kg 13,0 Kg
Type of oil MOBIL	DTE 11 M
Quantity of oil OLI 602, 603, 604 OLI 605, 606	 1,75 lt 2 lt
Operating temperature range	-15°C ÷ 70 °C
Degree of protection	IP 55
Overall dimensions	see F2 on page 31

4.3 Labelling information

Part of the summarised data are listed in the label applied to the product (see Position F6, Page 32); the data regarding the seller are found in the enclosed Warranty, while "Indispensable Operating Safety Elements" are found under Point "4.2 Technical data".

4.4 Suitable conditions of use

The OLI 600 is designed for installation in residential and industrial swing gates as an actuator for the operational automation as shown in F3 on Page 31 and features attachments for its use on supports in masonry or metal structural works and various types of gates (see the optional accessories table on Page 8).

The OLI 600 has been designed and tested for operation under "normal" residential and industrial gate opening conditions; temperature limits, degrees of protection against dust and water, and other data are provided in Point 4.2 "Technical Data".

Satisfactory operation requires the correct positioning of the OLI 600 operator with respect to the gate; we provide the **DEA** System recommended measurements in F3, Page 31.

Article	α	A mm	B mm	C mm	D mm	E mm
602	90°	130	130	270	1000	110
603	90°	130	130	270	1000	110
604	90°	130	130	270	1000	110
605	90°	200	190	400	1260	90
605	120°	150	190	400	1260	90
606	90°	200	190	400	1260	90
606	120°	150	190	400	1260	90

The operator required must be selected according to the gate to be automated; the attrition on the attachments, the weight, the length/height of the gate leaf and the degree of closing of the surfaces are the elements to be considered. We provide a chart representing typical situations that correlates the length of the gate leaf with its weight.

"LENGTH-WEIGHT" chart

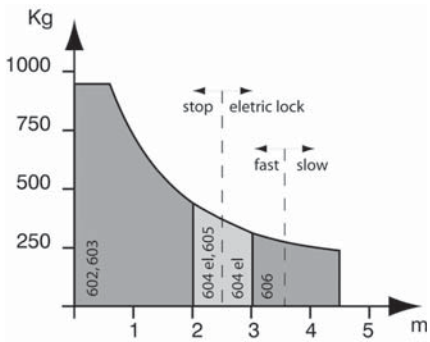

WARNING The use of the product under unusual conditions not foreseen by the manufacturer can create situations of danger, and for this reason all the conditions prescribed in these instructions must be respected. A1

4.5 Instructions for risk-free operation

4.5.1 Transport

The OLI 600 gate operator is always delivered packed in boxes that guarantee the product adequate protection. Carefully read any warnings or instructions for storage and handling provided on the box. If the product must be re-packaged or transported for any reason after installation, consider the risk of leakage of oil from the release lever. To avoid this make sure the O-ring is installed and appropriately positioned in the release mechanism (see A in F5 on Page 30).

4.5.2 Installation, assembly and disassembly

WARNING All installation, maintenance, cleaning or repair operations on any part of the system must be performed exclusively by qualified personnel with the power supply disconnected working in strict compliance with the electrical standards and regulations in force in the nation of installation. A3

The following operations are essential to the correct laying of the product:

- the careful definition of the entire automatic opening layout (see also "6 Complete Closing Assembly"); in particular, after carefully assessing the characteristics of the supports and the gate, the attachments must also be designed and positioned according to the angle of opening desired (see F2, F3 Page 31).
- fasten the attachments

The fastening of the attachments must be performed with extra attention on both iron pillars and masonry works and gates of any type.

The necessity of installing reinforcement plates for iron pillars and gates must be carefully assessed whenever the remaining part of the structure does not appear sufficiently strong, whenever the metal plate used does not appear thick enough or whenever the morphology of the gate appears to lack solidity.

Pillars in masonry, on the other hand, always require the application of a welded plate support, such as Art. 0/652 **DEA** System (see "3 Models and contents of the package") to be fastened sunken in a cement mortar foundation, fastened mechanically or chemically depending on type.

Keep all welding seams well protected from corrosion.

Give extra attention to the alignment between the attachments and their planarity. Apply the OLI 600 gate operator to the attachments as shown in F8 and F9 on Page 32.

WARNING Disassemble the gate operator from its attachments only after first making sure that there is no pressure remaining inside the pump/cylinder. A4

4.5.3 Starting

The installation of the product requires masonry and/or welding and electrical connection operations using adequate equipment for the job in complete respect of the accident-prevention standards and regulations in force in the nation of installation.

The product must be electrically connected to a special control unit for gate operators; see the instructions provided for such device for further information. **Refer to procedure on page 13 if you use a 202RR control panel.**

In order to avoid all oil leakage from the operator during transport and to ensure proper protection against water infiltration in the product, DEA System installs an O-ring in the release mechanism (see A in F5 on Page 30).

WARNING The removal of the O-ring in the release mechanism may cause water infiltrations into the oil tank, which may damage the product or result in malfunctioning. Always make sure the O-ring is installed. A5

4.5.4 Use

The product is destined for incorporation in the assembly of devices that comprise the gate automation. **DEA** System assumes that it will always be used in compliance with the standards and regulations in force. The OLI 600 gate operator is equipped with a release system with the following operation:

After the lock on the handle has been opened (protected by the black plastic cover), the lever must be rotated clockwise to the end of its stroke (to approx. 90°); at this point, the OLI 600 operator is released and if no other obstructions are present, the gate is free to move without hindrance.

The opposite procedure, in other words, the rotation of the lever to the end of its stroke (to approx. 90°) in the counterclockwise direction and the closing of the lock (remember to protect the lock with the respective cover) returns the OLI 600 operator to normal working conditions.

WARNING The stopper that protects the rod (see Point 1 in F1 Page 30) has been designed to guarantee protection against the crushing of the fingers. Under no circumstances must this device be tampered with by locking it in place with screws, for example, thereby creating serious risk! A6

4.5.5 Adjustment

The pump is equipped with a pair of valves for the adjustment of the oil flow during opening and closing. Remove the release lever's two fixing screws to permit adjustment (see F5 Page 30). To eliminate any residual air from the cylinder, after doing all adjustments, have the gate do a complete opening cycle up to the stop and operate on the release handle. Repeat this operation also for a complete closing cycle. Repeat 2 or 3 times. (Also see F12 on page 37)

WARNING Water or other substances may enter the oil tank during adjustment operations and cause pump damage and malfunction. Therefore pay careful attention to any such foreign matter in the vicinity and remember to re-position the release lever after adjustment has been completed. A7

WARNING All the other adjustment/setting operations beyond the adjustment of the oil flow are made by the manufacturer. Tampering with these settings may cause malfunction and/or situations of risk to people, animals and property. Refrain from performing any operations not authorised by **DEA** System.

4.5.6 Maintenance and repair

Good preventive maintenance and regular inspection ensure long working life (see also "Warranty"). Consult the "TROUBLESHOOTING" table here at the side whenever anomalies are observed in order to find the solution to the problem and contact **DEA** System directly whenever the solution required is not provided.

The inspection/maintenance operations to be routinely scheduled in the "complete automation maintenance register" are:

INTERVENTION TYPE	PERIODICITY
cleaning of external surfaces	6 months
checking of screw tightening	6 months
checking of release mechanism operation	6 months
checking of oil level	1 year
oil change	3 years
greasing of articulated joint	1 year

Change the oil DEA System provides after three years of use with one of the same kind (see « 4.2 Technical Data »). Whenever inspections reveal an insufficient oil level this means that there must be a leakage. Check all closings and seals to find the leak and request spare parts and/or technical assistance from **DEA** System if necessary.

In order to change the oil unscrew and remove the release handle, detach OLI 600 from its attachments and keep it upside down until complete drainage of oil (see F5, F8 and F9 page 31 and 32) Top up oil to its regular level (See F7 page 32).

WARNING Disassemble the gate operator from its attachments only after first making sure that there is no pressure remaining inside the pump/cylinder. A4

WARNING All installation, maintenance, cleaning or repair operations on any part of the system must be performed exclusively by qualified personnel with the power supply disconnected working in strict compliance with the electrical standards and regulations in force in the nation of installation. A3

WARNING The use of spare parts not indicated by **DEA** System and/or incorrect re-assembly can create risk to people, animals and property and also damage the product. For this reason, always use only the parts indicated by **DEA** System and scrupulously follow all assembly instructions. A9

4.6 Training

After installation and setting, the correct operation of the complete automation must be carefully illustrated to the final user. The OLI 600 gate operator requires careful instruction on the release system (see "Enclosures") in particular and the respective maintenance schedule (see Point 4.5.6.).

WARNING Awareness of the operation of the OLI 600 key-release system (see F4 Page 30) is essential for all users of the automation because the failure to use the device quickly during emergencies can jeopardise people, animals and property. Enclosure I to these instructions, which the installer is required to deliver to the final user, illustrates operation and can be detached. A10

4.7 Not suitable use

Chapter "4.4 Suitable conditions of use" describes the conditions for which the product has been designed and tested. The product must never be used for other purposes.

WARNING The use of the product under unusual conditions not foreseen by the manufacturer can create situations of danger, and for this reason all the conditions prescribed in these instructions must be respected. A1

WARNING Under no circumstances must the product be used in explosive atmospheres or surroundings that may prove corrosive and damage parts of the product. A2

5 SPARE PARTS LIST

The list of spare parts that can be ordered (Pages 28 and 33) is a detailed list that accompanies the exploded view of the product and must be used to order spare parts.

The following data must always be provided when ordering spare parts:

- the code of the product (seen on the product label; see F6, Page 32),
- the part's position number in the exploded view,
- if available, the product's purchase date may be useful in some cases.

6 COMPLETE CLOSING ASSEMBLY

This chapter illustrates the typical installation of a complete automatism for the purpose of informing and assisting the installer in the selection of the various parts to be used in compliance with Machinery Directive (2006/42/CE) and European Safety Standards (EN 12453 - EN 12445) for gate installation.

The data provided in this chapter are neither complete nor exhaustive, and **DEA** System declines all liability for any errors, omissions or inaccuracies that may occur.

6.1 Minimum level of protection provided by the safety edge

Among the most serious risks to be considered for the automation of a swing gate is the risk of crushing between two wings or between one wing and its stop during closing. Regulations prescribe the adoption of one of the following types of controls against such risks depending on the use foreseen for the gate.

The example on the previous page features the installation of a system with delayed and overlapping closing and the protection of the gate wing with a safety edge.

6.2 Crushing in the opening area

"TROUBLE-SHOOTING" table

MALFUNCTION	CAUSES / SOLUTIONS
When the opening command is given, the gate wing fails to move and the operator's electric motor fails to start	The operator is not receiving correct power supply. Check all connections, fuses, and the power supply cable conditions and replace or repair if necessary
When the opening command is given, the motor starts but the gate wing fails to move	If the operator is equipped with a release system: make sure that it is closed (see F4 on Page 30) and adjust opening/closing pressure if necessary
The operator jerks during movement	Air is probably present inside the cylinder. Release the operator from the front attachment and then perform a few load-free trial manoeuvres before restoring the attachment.
	There is insufficient oil inside the cylinder. Top up the oil level (see F7 on Page 32) and bleed off the air by performing a few load-free trial manoeuvres (as above)
	The operator's front and rear attachments bend or are not fastened correctly. Repair or replace

The risk of crushing can also arise in the area between the gate being opened and the wall or other construction behind it. F10 on Page 32 provides the measurements that must be respected whenever measures are not taken to limit the impact force or whenever presence detection systems are not used.

6.3 Impact in the opening/closing area

In order to avoid crushing by the gate wing in the closing area, install a pair of photocells (A) (recommended height: 500 mm) in order to detect the presence of the test parallelepiped (B) (height: 700 mm) positioned as shown in F11 on Page 32.

Note. The presence detection test sample is a parallelepiped with 3 sides with light-coloured reflecting surfaces and 3 sides with dark-coloured, opaque surfaces.

In order to further reduce the risk of impact with the gate wing in the opening area, an extra pair of photocells (C) (recommended height: 500 mm) can be installed for the detection of the presence of the test parallelepiped (D) (height: 700 mm) positioned as shown in F11 on Page 32.

"EXAMPLE OF TYPICAL INSTALLATION" picture

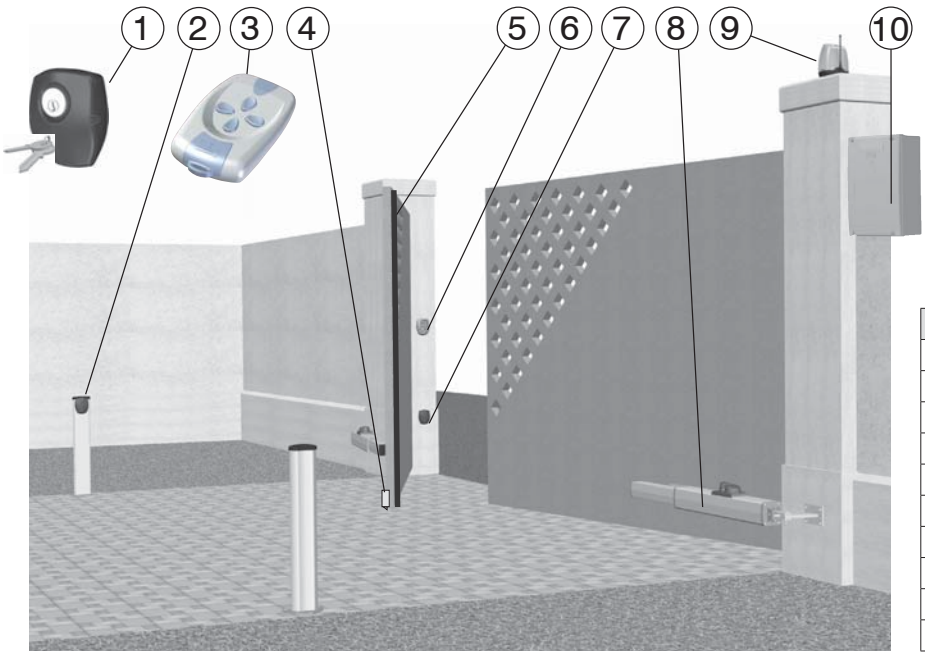

Pos.	Description
1	102 Lux keyswitch
2	Pilly 60 column
3	Remote-control
4	Electric lock
5	Safety edge
6	FLIC/rad digital keypad
7	104 Lux series photocells
8	OLI 600
9	Lumy flashing light
10	Control box

	Type of use		
Type of control	*Informed users (private areas)*	*Informed users (public areas)*	*Uninformed users*
Person-present control	Pushbutton control	Pushbutton control with key	The person-present control is not possible
Pulse control with the gate in sight	Force limitation or presence detectors	Force limitation or presence detectors	Force limitation and photocells or presence detectors
Pulse control with the gate not in sight	Force limitation or presence detectors	Force limitation and photocells or presence detectors	Force limitation and photocells or presence detectors
Automatic control (i.e. control with timed closing)	Force limitation and photocells or presence detectors	Force limitation and photocells or presence detectors	Force limitation and photocells or presence detectors

RESPONSIBILITIES OF THE INSTALLER

Remember that anyone who sells and/or motorises doors/gates becomes the manufacturer of the automatic door/gate machine and must therefore prepare and conserve a **technical folder** that contains the following documents (see Machinery Directive Enclosure V):

- Assembly drawing of the automatic door/gate;
- Electrical connection and control circuit wiring diagram;
- Risk analysis including: a list of the essential safety requirements provided in Machinery Directive Enclosure I; a list of the risks posed by the door/gate and the description of the solutions adopted.
- Keep these operating instructions in a safe place together with the instructions for all the other components;
- Prepare these operating instructions and general safety warnings (for the completion of these operating instructions) and deliver a copy to the final user;
- Fill out the maintenance register and deliver a copy to the final user;
- Fill out the complete label or plate and apply it to the door/gate.

Note: The technical folder must be conserved for inspection by the competent national authorities for at least ten years from the date construction of the automatic door/gate.

INSTRUCTIONS FOR A CORRECT ADJUSTMENT OF AUTOMATION WITH OLI HYDRAULIC RAM AND 202RR.CONTROL PANEL

(Before proceeding, carefully read the 202RR instructions manual)

When using 202RR control board with Hydraulic ram "OLI 600" series there are two different ways of adjustment, depending on the type of installation required:

Force adjusted mechanically on ram (More practical and a faster installation):

1. Program the operators force nearly at maximum (P014 = P016 = 99%);
2. Go to parameter P.001, "wing No. 1 positioning" and by pressing "+"button bring the wing into the completely open position. If wing does not move, adjust the ram force by adjusting brass screw on the opening exhaust valve, until wing moves smoothly;
3. Now by pressing "-"button bring the wing into the completely closed position. If wing does not move, adjust the ram force by adjusting brass screw on the closing exhaust valve, until wing moves smoothly;
4. Go to parameter P.002, "wing n°2 positioning". Continue steps 2 and 3 as per wing n°1;
5. Go to P.003 and start the learning manoeuvre. Motor 1 starts to close and automatically stops once it arrives at the end of stroke. Motor 2 starts too close and automatically stops once it arrives at the end of stroke (i.e. fully closed (if the operator doesn't stop, press OK). display shows "----": the learning is now completed.

Force electronic adjustment and setting of the obstacles detection device (Higher level of safety, slower instillation):

1. Set the operator force(P014 motor 1) at an intermediate value 50% (Or higher if gates are very heavy);
2. Completly loosen both exhaust valve screws (anticlockwise);
3. Go to P.001, "wing positioning";
4. Press the "+" button (or CH2 of an already memorized remote): the motor starts up, but the wing doesn't move. Keeping the button pressed, close the opening exhaust valve (clockwise) until the motor starts opening with the desired force;
5. Push the "-" button (or CH4 of an already memorized remote): the motor starts up, but the wing doesn't move. Keeping the button pressed, close the closing exhaust valve until the motor starts closing with the desired force;
6. Exit from P.001 and get access to P.014: decrease the set force, exit from P.014 and go again to P.001 in order to check that motor can correctly move the wing in both directions;
7. **Repeat point 6 until you will find the minimum force value that can correctly move the wing in both directions;**
8. Go to P.001 and push the"-"button to bring the wing to fully closed position (ram fully extended) tighten the closing exhaust valve further on until you hear the pump completely stop and the operator is under stress;
9. Press the "+" key and bring the wing to fully open position (ram is fully in). Keeping the button pressed, tighten the opening exhaust valve until you hear the pump completely stop and the operator is under stress;
10. Leave the wing completely opened;
11. Repeat all the procedure from point 1 to point 10 for the wing n° 2 using P.002 for the positioning and P.016 to ad just the force. At last, leave the wing completely opened;
12. Go to P.003 and start the learning manoeuvre. This will automatically conclude when both wings are arrived at the closing stop and the display shows "----".the learning is now completed;

When electric lock is fitted, if it has difficulties in latching, during the learning cycle (P003) assist the latch mechanism by pushing the wing with the hands, (until latched) then proceed as follows:

13. Set up P.031 "force in the very last distance" with a value 30% greater than Value of P.014 (e.g.: if P.014 = 50, then P.031 = 65);
14. Start a closing manoeuvre and when wing n°1 arrives at stroke, before the working times finishes, tighten the closing exhaust valve further on until the electro-lock latches.

Esempio di installazion tipica - Example of typical installation - Exemple d'installation typique Ejemplo de instalación típica - Exemplo de instalação típica

DEA System fornisce queste indicazioni che si possono ritenere valide per un impianto tipo ma che non possono essere complete. Per ogni automatismo, infatti, l'installatore deve valutare attentamente le reali condizioni del posto ed i requisiti dell'installazione in termini di prestazioni e di sicurezza; sarà in base a queste considerazioni che redigerà l'analisi dei rischi e progetterà nel dettaglio l'automatismo.

DEA System provides the following instructions which are valid for a typical system but obviously not complete for every system. For each automatism the installer must carefully evaluate the real conditions existing at the site. The installation requisites in terms of both performance and safety must be based upon such considerations, which will also form the basis for the risk analysis and the detailed design of the automatism.

DEA System fournit ces indications que vous pouvez considérer comme valables pour une installation-type, même si elles ne peuvent pas être complètes. En effet, pour chaque automatisation, l'installateur doit évaluer attentivement les conditions réelles du site et les pré-requis de l'installation au point de vue performances et sécurité ; c'est sur la base de ces considérations qu'il rédigera l'analyse des risques et qu'il concevra l'automatisation d'une manière détaillée.

DEA System facilita estas indicaciones que pueden considerarse válidas para una instalación tipo pero que no pueden considerarse completas. El instalador, en efecto, tiene que evaluar atentamente para cada automatismo las reales condiciones del sitio y los requisitos de la instalación por lo que se refiere a prestaciones y seguridad; en función de estas consideraciones redactará el análisis de riesgos y efectuará el proyecto detallado del automatismo.

DEA System fornece estas indicações que podem ser consideradas válidas para o equipamento padrão, mas que podem não ser completas. Para cada automatismo praticamente o técnico de instalação deverá avaliar com atenção as condições reais do sítio e os requisitos da instalação em termos de performance e de segurança; será em função destas considerações que realizará uma análise dos riscos e projectará o

DEA System consiglia di inserire il quadro di comando (scheda elettrica + box) in scatole di derivazione commerciali - DEA System suggests to shelter the control board (control board card + box) inside a connector block box (not supplied) - DEA System vous conseille d'insérer l'armoire de commande dans (carte eléctronique + boîte) une boîte étanche de dérivation (pas fournie) - DEA System aconseja de insertar el cuadro de maniobra (tarjeta electronica del cuadro de mando + caja) en una caja de derivación (no provista) - Dea System aconselha instalar o quadro de comando (quadro eléctrico + caixa) numa caixa de derivação (não fornecida)

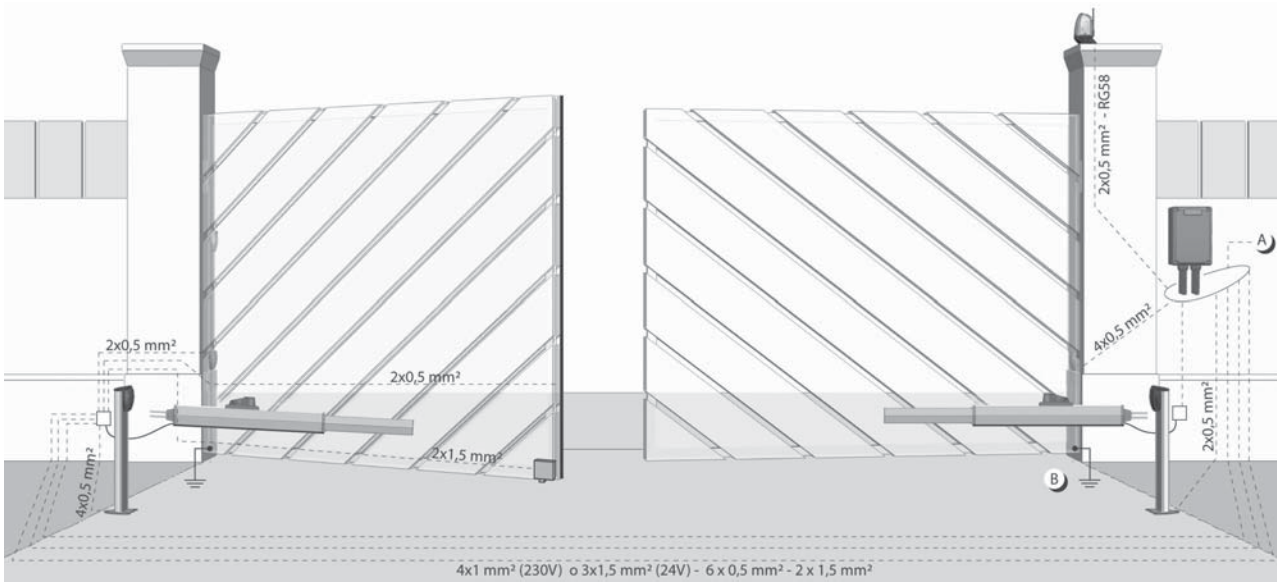

A) Collegarsi alla rete 230 V ± 10% 50-60 Hz tramite un interruttore onnipolare o altro dispositivo che assicuri la onnipolare disinserzione della rete, con una distanza di apertura dei contatti ≥ 3 mm
Make the 230V ± 10% 50-60 Hz mains connection using an omnipolar switch or any other device that guarantees the omnipolar disconnection of the mains network with a contact opening distance of 3 mm
Connectez-vous au réseau 230 V ± 10% 50-60 Hz au moyen d'un interrupteur omnipolaire ou d'un autre dispositif qui assure le débranchement omnipolaire du réseau, avec un écartement des contacts égal à 3 mm.
Efectuar la conexión a una línea eléctrica 230 V ± 10% 50-60 Hz a través de un interruptor omnipolar u otro dispositivo que asegure la omnipolar desconexión de la línea, con 3 mm de distancia de abertura de los contactos.
Ligue na rede de 230 V. ± 10% 50-60 Hz mediante um interruptor omnipolar ou outro dispositivo que assegure que se desliga de maneira omnipolar da rede, com abertura dos contactos de pelo menos 3 mm. de distância

B) Collegare a terra tutte le masse metalliche - All metal parts must be grounded - Connectez toutes les masses métalliques à la terre - Conectar con la tierra todas las masas metálicas - Realize ligação à terra de todas as massas metálicas

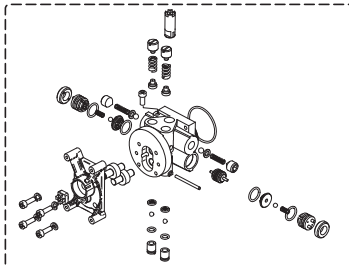

cod. 460030 pompa idraulica - art. 602
hidraulic pump
hydraulique pompe
bomba hidráulica
bomba hidráulica
cod. 460031 pompa idraulica - art. 603-605
hidraulic pump
hydraulique pompe
bomba hidráulica
bomba hidráulica
cod. 460032 pompa idraulica - art. 604-606
hidraulic pump
hydraulique pompe
bomba hidráulica
bomba hidráulica
cod. 460033 pompa idraulica - art.602L
hidraulic pump
hydraulique pompe
bomba hidráulica
bomba hidráulica
cod. 460034 pompa idraulica - art. 603L-605L
hidraulic pump
hydraulique pompe
bomba hidráulica
bomba hidráulica
cod. 460035 pompa idraulica - art. 604L-606L
hidraulic pump
hydraulique pompe
bomba hidráulica
bomba hidráulica

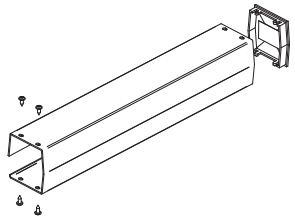

cod. 924070H copristelo - art. L=270
rod cover - art. L=270
protection tige - art. L=270
cubre vástago - art. L=270
cobri caule - art. L=270
cod. 924071H copristelo - art. L=360
rod cover - art. L=360
protection tige - art. L=360
cubre vástago - art. L=360
cobri caule - art. L=360

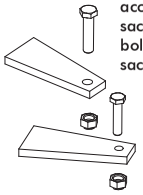

cod. 430100 sacchetto accessori
accessories small bag
sachet accessoires
bolsita accesorios
saco de acessórios

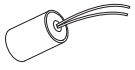

cod. 162000 condensatore
capacitor
condensateur
condensador
condensador

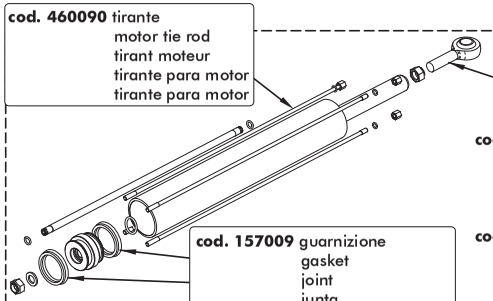

cod. 460090 tirante
motor tie rod
tirant moteur
tirante para motor
tirante para motor

cod. 123000 testa a snodo
articulated head
tête à rotule
cabeza articulada
cabeça articulada

cod. 924060G stelo - art. L=270mm
rod - art. L=270mm
tige - art. L=270mm
tallo - art. L=270mm
haste - art. L=270mm
cod. 924061G stelo - art. L=360mm
rod - art. L=360mm
tige - art. L=360mm
tallo - art. L=360mm
haste - art. L=360mm

cod. 157009 guarnizione
gasket
joint
junta
guarnição

cod. 157010 guarnizione
gasket
joint
junta
guarnição

cod. 924090L supporto anteriore
front support
support avant
soporte anterior
suporte anterior

cod. 156014 o-ring
o-ring
joint d'étanchéité
o-ring
o-ring

cod. 320230 raschiapolvere
powder scraper
racle-poudre
rasca-polvo
raspador de pó

cod. 320190 guarnizione
gasket
joint
junta
guarnição

cod. 320190 guarnizione
gasket
joint
junta
guarnição

cod. 121013 cuscinetto
bearing
coussinet
cojinete
rolamento

cod. 310051 forcella posteriore
rear hinge
charnière postérieur
bisagra posterior
dobradiça traseiro

cod. 924080I supporto posteriore
rear bracket
support postérieur
grapa posterior
suporte traseiro

cod. 393030 statore
stator
stator
estator
estator

cod. 470010 cavo elettrico
electric cable
cable electrique
cable eléctrico
cabo eléctrico

cod. 924000A gruppo motore
power unit
ensemble moteur
grupo motor
grupo motor

cod. 310110 cilindro - art. L=270
cylinder - art. L=270
cylindre - art. L=270
cilindro - art. L=270
cilindro - art. L=270

cod. 310120 cilindro - art. L=360
cylinder - art. L=360
cylindre - art. L=360
cilindro - art. L=360
cilindro - art. L=360

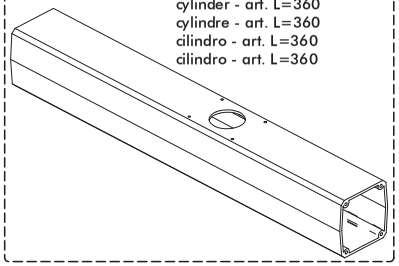

cod. 924100M sblocco esterno - art. 600
external unlocking device - art. 600
déverrouillage extérieur - art. 600
desbloqueo externo - art. 600
desbloqueio externo - art. 600

cod. 924101M sblocco esterno - art. 600 neutro
external unlocking device - art. 600 neutral
déverrouillage extérieur - art. 600 neutre
desbloqueo externo - art. 600 neutro
desbloqueio externo - art. 600 neutra

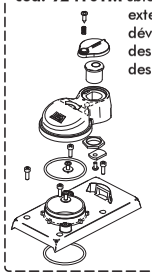

Esploso raggruppato OLI 600 Rev. 02

Contenuto dell'imballo
Contents of the package
Contenu de l'emballage
Contenido del embalaje
Conteúdo da embalagem

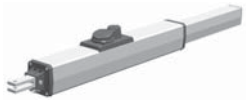	x1
	x1
M12 	x1
M10 	x1
M12 	x4
M10 	x1
Ø12 	x1
Ø10 	x1
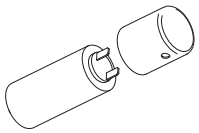	x1

F1 Elementi del prodotto, Product elements, Eléments du produit, Elementos del producto, Elementos do produto

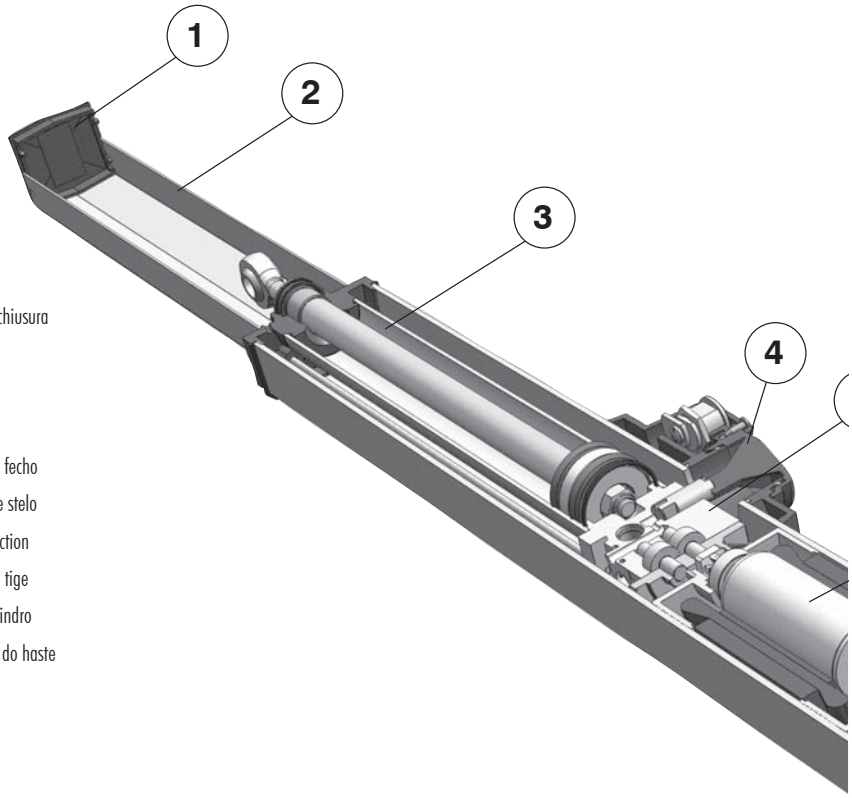

1 Tappo di chiusura
Stopper
Bouchon
Tapon
Tampa de fecho
2 Protezione stelo
Rod protection
Protection tige
Cuerpo cilindro
Protecção do haste
3 Cilindro
Cylinder
Cylindre
Cilindro
Cilindro
4 Gruppo maniglia
Handle unit
Groupe poignée
Grupo manilla
Grupo do puxador

F4 Sblocco manuale, Manual release, Déverrouillage manuel, Desbloqueo manual, Desbloqueio manual

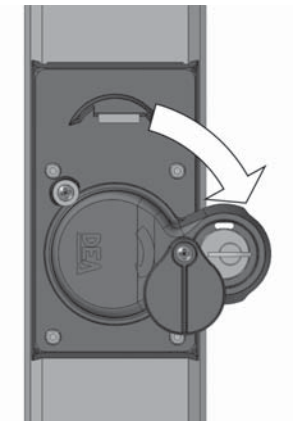

-NON rimuovere l'O-Ring presente sullo sblocco - NE PAS retirer le joint d'étanchéité positionné sur le dispositif de déverrouillage - DO NOT remove the O-Ring placed on the unlocking system - NO sacar el anillo aislante O-Ring que hay en el desbloqueo - NÃO TIRAR a guarniçao O-RING no dispositivo de desbloqueio.

5 Pompa
Pump
Pompe
Bomba
Bomba

6 Gruppo motore
Motor unit
Groupe moteur
Grupo motor
Grupo do motor

7 Forcella
Hinge
Charnière
Bisagra
Dobradiça

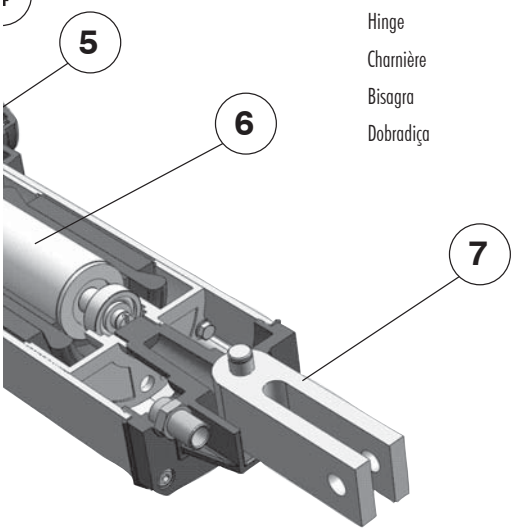

F2 Ingomri prodotto, Product dimensions, Cotes d'encombrement du produit, Espacio ocupado por el producto, Medidas máximas do produto

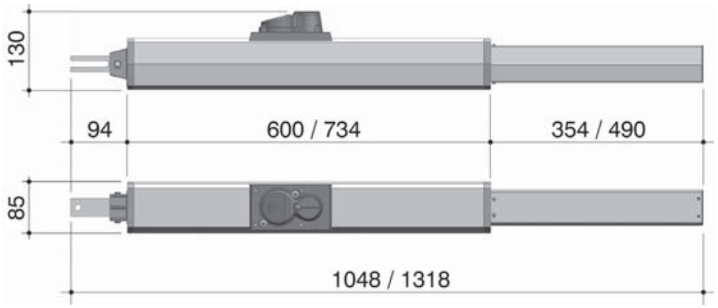

F3 Misure intallazione, Installation measurements, Mesures pour l'installation, Medidas instalación, Medidas para instalação

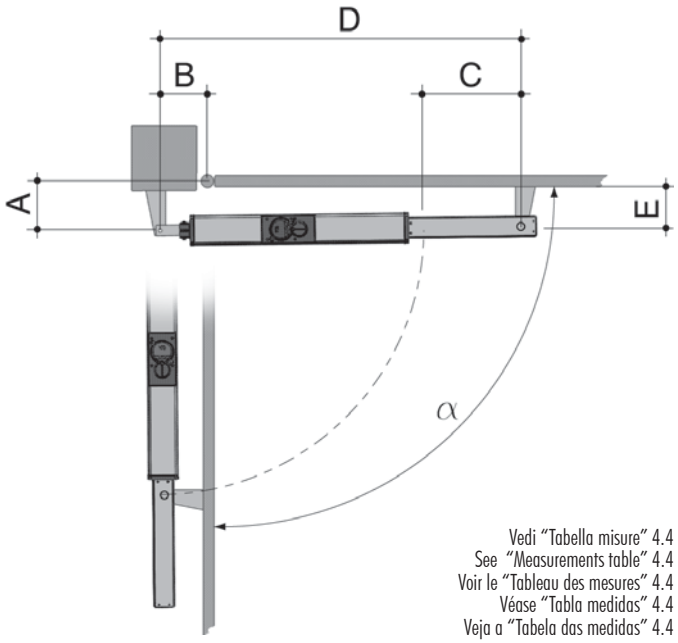

Vedi "Tabella misure" 4.4
See "Measurements table" 4.4
Voir le "Tableau des mesures" 4.4
Véase "Tabla medidas" 4.4
Veja a "Tabela das medidas" 4.4

F5 Regolazione portata, Oil flow adjustment, Régulation portée, Ajuste de la fuerza, Regulação do alcance

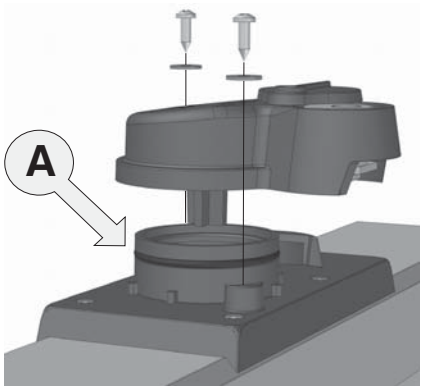

Regolazione pressione apertura
Opening pressure adjustment
Régulation pression ouverture
Regulación de la presión de abertura
Regulação da pressão da abertura

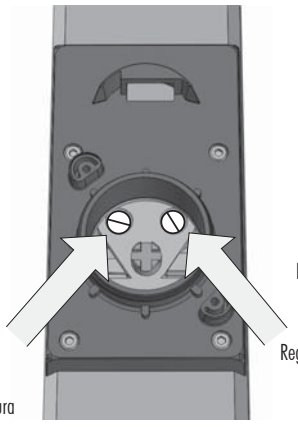

Regolazione pressione chiusura
Closing pressure adjustment
Régulation pression fermeture
Regulación de la presión de cierre
Regulação da pressão do fecho

F6 Posizione etichetta, Label position, Position étiquette, Posición etiqueta, Posição da etiqueta

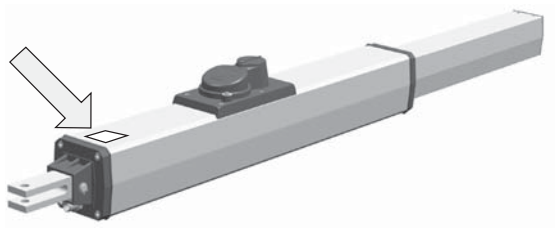

F7 Livello olio, Oil level, Niveau huile, Nivel aceite, Nível do óleo

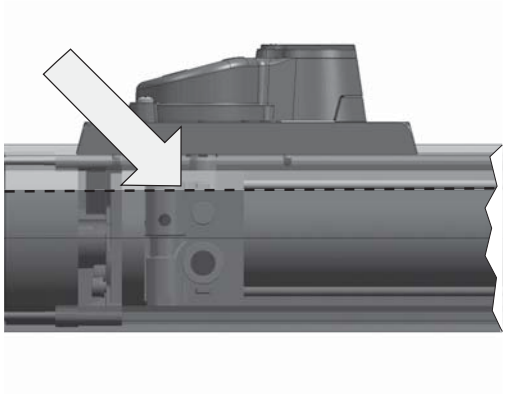

F8 Attacco anteriore, Front support, Support antérieur, Unión delantera, Engate dianteiro

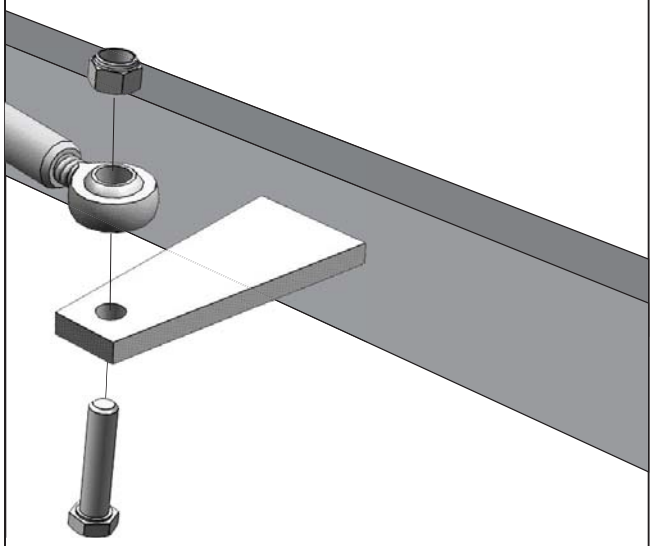

F9 Attacco posteriore, Rear support, Support postérieur, Unión trasera, Engate traseiro

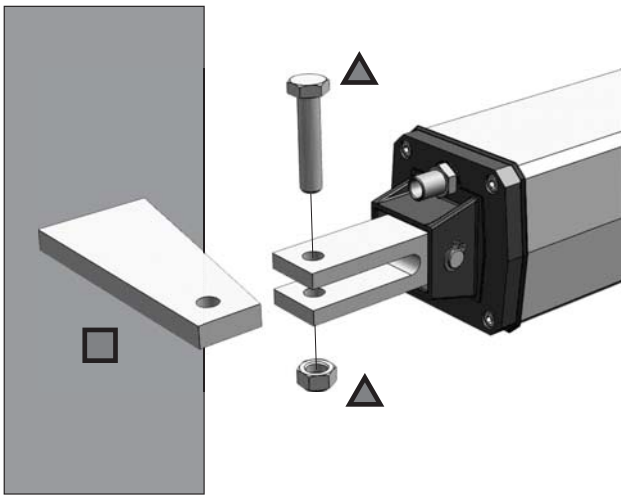

F10 Distanze antischiacciamento, Crushing prevention safety distances, Distances anti-écrasement, Distancias anti aplastamiento, Distância para evitar esmagamento

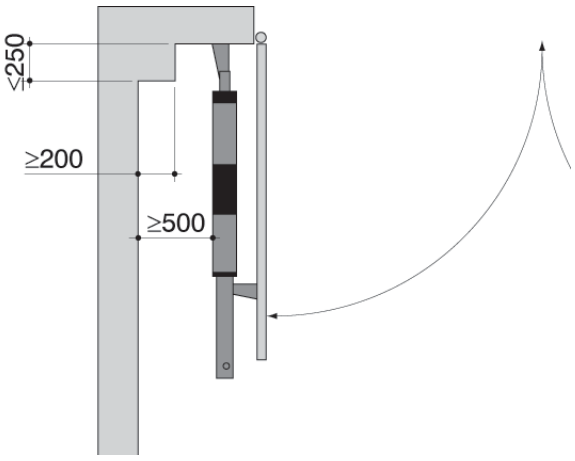

F11 Distanze installazione fotocellule, Photocell installation distances, Distances installation photocellules, Distancias instalación fotocélulas, Distância da instalação das fotocélulas

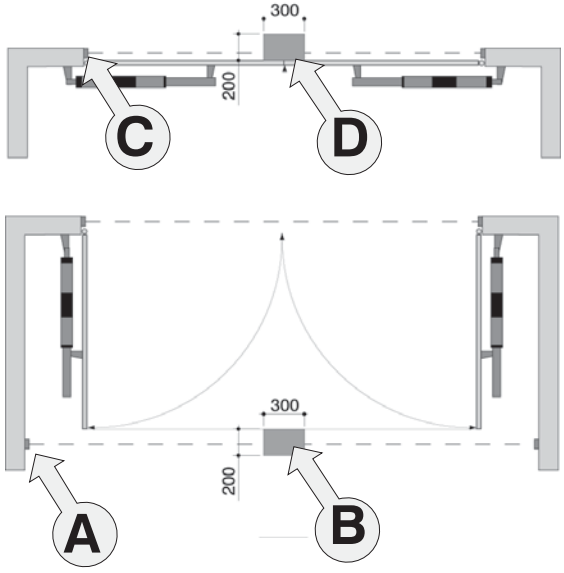

F12 Regolazione sfiato, Vent Adjustment, Régulation de la ventilation,
Ajuste de ventilación, Regulação da ventilação



E' consigliato svitare per circa 1-2 giri la vite illustrata nella figura accanto, al fine di evitare la formazione di una pressione eccessiva all'interno del cilindro idraulico.

In order to avoid excessive pressure within the hydraulic cylinder, DEA recommends to unscrew the screw shown in the picture below 1-2 times.

DEA recommande de dévisser d'environ 1 ou 2 tours la vis indiquée sur l'image, afin d'éviter la formation d'une pression excessive dans le cylindre hydraulique.

Se recomienda destornillar el tornillo 1-2 vueltas ilustrado en la imagen, para evitar la formación de exceso de presión dentro del cilindro hidráulico.

Recomenda-se desapertar o parafuso ilustrado na figura 1-2 voltas, para evitar o aumento excessivo de pressão no interior do cilindro hidráulico.

NOTES

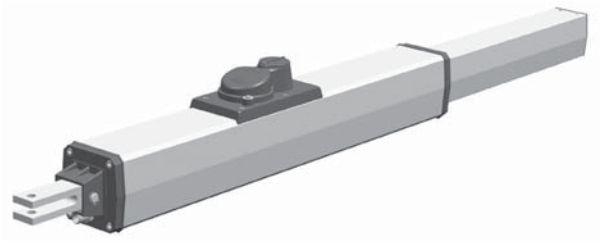

OLI 600

IT

ISTRUZIONI PER L'UTENTE FINALE

Questa guida è espressamente realizzata per gli utenti dell'automatismo; l'installatore ha il compito di consegnarla ed illustrarla ad un responsabile dell'impianto il quale si preoccuperà dell'informazione a tutti gli altri utenti. E' importante che queste istruzioni siano conservate e rese facilmente disponibili.

Una buona manutenzione preventiva ed una regolare ispezione al prodotto ne assicurano una lunga durata. Contattare regolarmente l'installatore per la manutenzione programmata ed in caso di guasto.

REGOLE DI SICUREZZA

1. Durante il funzionamento dell'automatismo rimanere sempre ad una adeguata distanza di sicurezza e non toccare alcun elemento.
2. Impedire ai bambini di giocare nelle immediate vicinanze dell'automatismo.
3. Eseguire i controlli e le ispezioni previste nel programma di manutenzione; nel caso di funzionamento anormale non utilizzare l'automatismo.
4. Non smontare parti! Le operazioni di manutenzione e riparazione devono essere eseguite da personale qualificato
5. Può accadere che l'operazione di sblocco si debba realizzare in situazioni di emergenza! Istruire bene tutti gli utenti sul funzionamento dello sblocco e sull'ubicazione delle chiavi di sblocco.

SBLOCCO DI OLI 600

OLI 600 è dotato di un dispositivo di sblocco da utilizzare in mancanza di tensione per l'apertura del cancello; il funzionamento di tale dispositivo è il seguente (vedi figura).

Una volta aperta la serratura posta sulla maniglia (protetta dal coperchietto in plastica nera) la leva va azionata in senso orario fino alla fine della sua corsa (per 90° circa); a questo punto OLI 600 è sbloccato e il cancello, in assenza di altri impedimenti è libero nei suoi movimenti.

Il procedimento inverso, rotazione della leva fino a fine corsa (per 90° circa) in senso antiorario e chiusura della serratura (ricordarsi di proteggere la serratura con l'apposito coperchietto), riporta OLI 600 in condizioni di lavoro.

PULIZIA ED ISPEZIONI

L'unica operazione che l'utente può e che deve fare è quella di rimuovere da OLI 600 foglie, rami e ogni altro detrito che ne ingombri il movimento. Attenzione! Operare sempre in mancanza di tensione!

CONDIZIONI DI GARANZIA

La garanzia sui nostri prodotti è di 24 mesi dalla data di installazione. La garanzia è limitata esclusivamente alla riparazione o sostituzione gratuita dei pezzi riconosciuti difettosi. La garanzia non è valida se i prodotti sono stati manomessi, modificati, installati in modo non corretto o privi di etichetta di identificazione con codice e data di produzione.

EN

INSTRUCTIONS FOR THE FINAL USER

This guide has been prepared for the final users of the automation; the installer is required to deliver this guide and illustrate its contents to the person in charge of the system. The latter must then provide similar instruction to all the other users. These instructions must be carefully conserved and easily available for consultation when required.

Good preventive maintenance and frequent inspection ensures the long working life of the product. Contact the installer regularly for routine maintenance and in event of anomaly.

SAFETY RULES

1. Always keep a safe distance from the automation during operation and never touch any moving part.
2. Prevent children from playing near the automation.
3. Perform the control and inspection operations prescribed in the maintenance schedule and immediately stop using the automation whenever signs of malfunction are noted.
4. Never disassemble parts of the product! All maintenance and repair operations must be performed only by qualified personnel.
5. The release operation must sometimes be performed in emergencies! All users must be instructed on the use of the release mechanism and the location of the release keys.

OLI 600 RELEASE SYSTEM

The OLI 600 hydraulic operator is equipped with a release system to be used to open the gate whenever a power failure occurs with the following operation (see the figure below). After the lock on the handle has been opened (protected by the black plastic cover), the lever must be rotated clockwise to the end of its stroke (to approx. 90°); at this point, the OLI 600 operator is released and if no other obstructions are present, the gate is free to move without hindrance.

The opposite procedure, in other words, the rotation of the lever to the end of its stroke (to approx. 90°) in the counter-clockwise direction and the closing of the lock (remember to protect the lock with the respective cover) returns the OLI 600 operator to normal working conditions.

CLEANING AND INSPECTIONS

The only operation that the user can and must do is to remove branches, leaves, and any other object that might obstruct the gate's free movement. Warning! Always disconnect the power supply whenever performing operations on the gate!

TERMS OF WARRANTY

Our products are covered by warranty for 24months from the date of installation. Coverage is limited exclusively to the free repair or replacement of parts recognised as defective. Warranty coverage will not be provided whenever the products have been tampered with, modified or installed incorrectly or whenever the identification labels with the respective codes and production dates are missing.

FR

INSTRUCTIONS POUR L'UTILISATEUR FINAL

Ce guide a été réalisé exprès pour les utilisateurs de l'automatisation. L'installateur doit le remettre et le commenter à un responsable de l'installation, qui répercutera l'information à tous les autres utilisateurs. Il est important de garder ces instructions, et elles doivent être facilement accessibles.

Une bonne maintenance préventive et une inspection régulière du produit assurent sa longue durée. Contactez l'installateur régulièrement pour la maintenance programmée, et en cas de panne.

RÈGLES DE SÉCURITÉ

1. Pendant le fonctionnement de l'automatisation restez toujours à une certaine distance de sécurité, et ne touchez aucun élément.
2. Empêchez les enfants de jouer dans les alentours immédiats de l'automatisation.
3. Effectuez les vérifications et les inspections prévues dans le programme de maintenance. En cas de fonctionnement anormal, n'utilisez pas l'automatisation.
4. Ne démontez pas les pièces! Les opérations de maintenance et de réparation doivent être exécutées par du personnel qualifié.
5. Il peut arriver que l'opération de déverrouillage doive se dérouler dans des situations d'urgence! Instruisez bien tous les utilisateurs sur le fonctionnement du déverrouillage et sur la position des clefs de déverrouillage.

DÉVERROUILLAGE DE OLI 600

OLI 600 est équipé d'un dispositif de déverrouillage à utiliser pour ouvrir le portail quand il n'y a pas de tension. Le fonctionnement de ce dispositif est le suivant (voir figure). Une fois que la serrure (protégée par le capot en plastique noir) qui est positionnée sur la poignée est ouverte, il faut actionner le levier dans le sens des aiguilles d'une montre jusqu'à la fin de sa course (pendant environ 90°). OLI 600 est alors déverrouillé et le portail, sans autres entraves, est libre de manoeuvrer.

Le procédé inverse, soit la rotation du levier jusqu'à la fin de sa course (pendant environ 90°) dans le sens inverse des aiguilles d'une montre et la fermeture de la serrure (rappelez-vous de protéger cette serrure à l'aide du capot prévu à cet effet), ramène OLI 600 dans ses conditions de travail.

NETTOYAGE ET INSPECTIONS

La seule opération que l'utilisateur peut et doit faire est de débarrasser OLI 600 des feuilles, des brindilles et de tout autre détritus qui pourrait entraver sa manoeuvre. Attention! Opérez toujours quand la tension est coupée!

CONDITIONS DE GARANTIE

La garantie sur nos produits est de 24 mois à compter de la date d'installation. La garantie concerne exclusivement la réparation ou le remplacement gratuit des pièces qui ont été reconnues défectueuses. La garantie n'est pas valable si les produits ont été manipulés, modifiés, installés d'une manière incorrecte ou débarrassés de leur étiquette d'identification portant leur code et la date de production.

ES

INSTRUCCIONES PARA EL USUARIO FINAL

Esta Guía se ha realizado expresamente para los usuarios del automatismo; el instalador tiene el deber de entregarla y explicarla a un responsable de la instalación quien se preocupará de informar a todos los demás usuarios. Es importante guardar estas instrucciones y que estén siempre disponibles.

Un buen mantenimiento preventivo y una regular inspección del producto aseguran su larga duración. Contactar regularmente al instalador para el mantenimiento programado y en caso de avería.

REGLAS DE SEGURIDAD

1. Durante el funcionamiento del automatismo, situarse siempre a una adecuada distancia de seguridad y no tocar ningún elemento.
2. Impedir que los niños jueguen en las inmediatas cercanías del automatismo.
3. Realizar los controles y las inspecciones previstas en el programa de mantenimiento; si el funcionamiento fuera anormal, no utilizar el automatismo.
4. No desmontar ninguna parte. Las operaciones de mantenimiento y reparación deben efectuarlas personal autorizado.
5. Es posible que la operación de desbloqueo deba realizarse en situaciones de emergencia. Todos los usuarios tienen que estar debidamente instruidos sobre el funcionamiento del desbloqueo y sobre la ubicación de las llaves de desbloqueo.

DESBLOQUEO DE OLI 600

OLI 600 tiene un dispositivo de desbloqueo que debe utilizarse para abrir la puerta en caso de caída de tensión; el funcionamiento de este dispositivo es el siguiente (véase la figura).

Una vez abierta la cerradura, colocada en la manilla (protegida por la tapa de plástico negro), la palanca se acciona hacia la derecha hasta el tope (unos 90°); a partir de este momento OLI 600 está desbloqueado y la puerta, si no existen otros impedimentos, puede moverse libremente.

El procedimiento contrario, rotación de la palanca hacia la izquierda hasta el tope (unos 90° aproximadamente) y cierre de la cerradura (acordarse de proteger la cerradura con la correspondiente tapa), lleva de nuevo OLI 600 a las normales condiciones de trabajo.

LIMPIEZA E INSPECCIONES

La única operación que el usuario puede y debe hacer es la de retirar de OLI 600 las hojas, ramas y otros residuos que impidan sus movimientos. ¡Atención! Estas operaciones deben efectuarse tras haber desconectado el suministro eléctrico.

CONDICIONES DE GARANTÍA

La garantía de nuestros productos dura 24 meses desde la fecha de instalación. La garantía se limita exclusivamente a la reparación o sustitución gratuita de las piezas reconocidas defectuosas. La garantía no es válida si los productos han sido forzados, modificados, instalados incorrectamente o carentes de etiqueta de identificación con código y fecha de producción.

PT

INSTRUÇÕES PARA O UTILIZADOR FINAL

Este guia foi expressamente realizado para os utilizadores do automatismo; o técnico de instalação tem a tarefa de entregá-lo e explicá-lo a um responsável pelo equipamento, que se encarregará pela informação a todos os demais utilizadores. É importante guardar e manter estas instruções de maneira que estejam facilmente disponíveis. Uma boa manutenção preventiva e uma regular inspecção do produto asseguram ao mesmo uma longa durabilidade. Contacte periodicamente o técnico de instalação acerca da manutenção programada e caso haja avarias.

REGRAS DE SEGURANÇA

1. Durante o funcionamento do automatismo permaneça sempre a uma adequada distância de segurança e não toque nenhum dos componentes.
2. Impeça que crianças brinquem nas proximidades do automatismo.
3. Efectue as verificações e as inspecções previstas pelo programa de manutenção; no caso de funcionamento anormal não utilize o automatismo.
4. Não desmonte nenhuma peça! As operações de manutenção e reparação devem ser efectuadas por pessoal qualificado.
5. Pode ser necessário efectuar uma operação de desbloqueio em situações de emergência! Instrua bem todos os utilizadores acerca do funcionamento do desbloqueio e da localização das chaves de desbloqueio.

DESBLOQUEIO DO OLI 600

O OLI 600 é equipado com um dispositivo de desbloqueio a ser utilizado sem tensão para a abertura do portão; o funcionamento deste dispositivo é o seguinte (veja a figura). Depois de ter aberto a fechadura situada no puxador (protegida por uma capa em matéria plástica preta), deve ser accionada a alavanca na direcção dos ponteiros do relógio até o final do seu percurso (cerca de 90°); neste ponto o OLI 600 estará desbloqueado e o portão, se não estiver preso de outra maneira, estará desimpedido para os seus movimentos. Mediante o processo inverso, ou seja com uma rotação da alavanca até o final do percurso (cerca de 90°) na direcção contrária aos ponteiros do relógio e se fechar-se a fechadura (lembre-se de proteger a fechadura com a sua capa), o OLI 600 voltará para as condições iniciais de funcionamento.

LIMPEZA E INSPECÇÕES

A única operação que o utilizador pode e deve efectuar é retirar do OLI 600: folhas, ramos e todos os demais detritos que atrapalhem o seu movimento. Atenção! Realize estas operações com a alimentação eléctrica à máquina desligada!

CONDIÇÕES DE GARANTIA

A garantia dos produtos da DEA System é de 24 meses a partir da data de instalação. Esta garantia é limitada exclusivamente à reparação ou substituição gratuita das peças reconhecidas como defeituosas. Esta garantia não é válida se os produtos tiverem sido alterados, modificados, instalados de maneira não correcta ou estejam sem a etiqueta de identificação que contém o código e a data de produção.

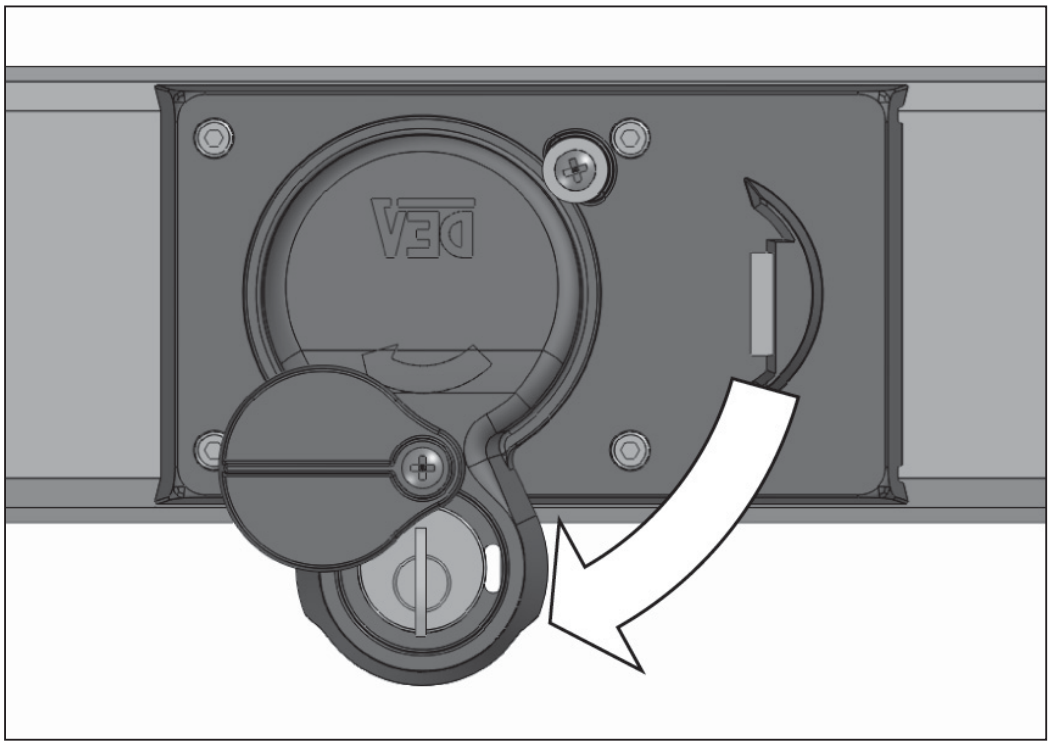

DEA SYSTEM S.p.A. - Via Della Tecnica, 6 - ITALY - 36013 PIOVENE ROCCHETTE (VI)
tel. +39 0445 550789 - fax +39 0445 550265 - Internet http:\\www.deasystem.com - e-mail: deasystem@deasystem.com



Questo manuale è stato realizzato utilizzando carta ecologica riciclata certificata Ecolabel per contribuire alla salvaguardia dell'ambiente.

This manual was printed using recycled paper certified Ecolabel to help save the environment.

Ce manuel a été réalisé en utilisant du papier recyclé certifié Ecolabel afin de respecter l'environment.

El manual ha sido fabricado utilizando papel reciclado certificado Ecolabel para preservar el medio ambiente.

Este manual foi impresso com papel reciclado certificado Ecolabel para ajudar a preservar o meio ambiente.

DEA SYSTEM S.p.A. - Via Della Tecnica, 6 - ITALY - 36013 PIOVENE ROCCHETTE (VI)
tel. +39 0445 550789 - fax +39 0445 550265 - Internet http:\\www.deasystem.com - e-mail: deasystem@deasystem.com